Note: If you have not downloaded this document from our official website, please note that the information provided may not be the most current.
Please download the latest datasheet of CSTCR7M37G55B02-R0 from the official website of Murata
https://pim.murata.com/en-eu/pim/details/?partNum=CSTCR7M37G55B02-R0

Recommended ● In Production

CSTCR7M37G55B02-R0

RoHS REACH

Applications

Unsuitable Applications	Please be sure to read and comply with these "Precautions for use".
Specific Applications	Automotive powertrain/safety equipment Please refer to Our Website and specifications, etc. for information about the performance, functions, quality, management, and safety required for the above applications, and use Products after confirming the performance and reliability of the actual Product.

Attention

1. This datasheet is downloaded from the website of Murata Manufacturing Co., Ltd. Therefore, it's specifications are subject to change or our products in it may be discontinued without advance notice. Please check with our sales representatives or product engineers before ordering.
2. This datasheet has only typical specifications because there is no space for detailed specifications.

Therefore, please review our product specifications or consult the approval sheet for product specifications before ordering.

Note: If you have not downloaded this document from our official website, please note that the information provided may not be the most current.
Please download the latest datasheet of CSTCR7M37G55B02-R0 from the official website of Murata
https://pim.murata.com/en-eu/pim/details/?partNum=CSTCR7M37G55B02-R0

CSTCR7M37G55B02-R0

Appearance & Shape

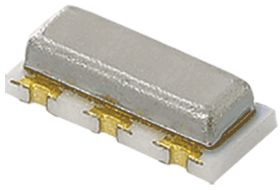

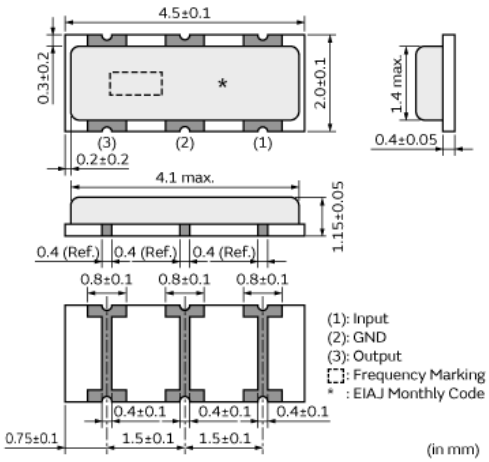

L x W (size)	4.5×2.0mm

Attention

1. This datasheet is downloaded from the website of Murata Manufacturing Co., Ltd. Therefore, it's specifications are subject to change or our products in it may be discontinued without advance notice. Please check with our sales representatives or product engineers before ordering.
2. This datasheet has only typical specifications because there is no space for detailed specifications.

Therefore, please review our product specifications or consult the approval sheet for product specifications before ordering.

CSTCR7M37G55B02-R0

Note: If you have not downloaded this document from our official website, please note that the information provided may not be the most current.
Please download the latest datasheet of CSTCR7M37G55B02-R0 from the official website of Murata
https://pim.murata.com/en-eu/pim/details/?partNum=CSTCR7M37G55B02-R0

Specifications

Series	CSTCR_G_B
Frequency	7.373MHz
Frequency Tolerance	±0.50%
Operating Temperature	-40～125℃
Frequency Shift by Temperature	±0.15%
Frequency Aging	±0.05%
ESR/R1	50Ω
Shape	SMD
Product Type	Ceramic Resonator (CERALOCK)
Wash	available

Attention
1. This datasheet is downloaded from the website of Murata Manufacturing Co., Ltd. Therefore, it's specifications are subject to change or our products in it may be discontinued without advance notice. Please check with our sales representatives or product engineers before ordering.
2. This datasheet has only typical specifications because there is no space for detailed specifications.
Therefore, please review our product specifications or consult the approval sheet for product specifications before ordering.

Note: If you have not downloaded this document from our official website, please note that the information provided may not be the most current.
Please download the latest datasheet of CSTCR7M37G55B02-R0 from the official website of Murata
https://pim.murata.com/en-eu/pim/details/?partNum=CSTCR7M37G55B02-R0

CSTCR7M37G55B02-R0

Features

MURATA's frequency adjustment and package technology expertise has enabled the development of the chip CERALOCK.
This diverse series owes its development to MURATA's original mass production techniques and high reliability, and has achieved importance in the worldwide automotive market.

Features

1. The series has high reliability and is available for a wide temperature range.
2. Oscillation circuits do not require external load capacitors.
3. The series is available in a wide frequency range.
4. The resonators are extremely small and have a low profile.
5. No adjustment is necessary for oscillation circuits.

References

Packaging	Specifications	Standard Packing Quantity
R0	180mm Embossed Tape	3000

Mass(Typ.)	
1 piece	29mg

Attention
1. This datasheet is downloaded from the website of Murata Manufacturing Co., Ltd. Therefore, it's specifications are subject to change or our products in it may be discontinued without advance notice. Please check with our sales representatives or product engineers before ordering.
2. This datasheet has only typical specifications because there is no space for detailed specifications.
Therefore, please review our product specifications or consult the approval sheet for product specifications before ordering.