Note: If you have not downloaded this document from our official website, please note that the information provided may not be the most current.
Please download the latest datasheet of CSTCR7M00G53-R0 from the official website of Murata
https://pim.murata.com/en-eu/pim/details/?partNum=CSTCR7M00G53-R0

CSTCR7M00G53-R0

Recommended ● In Production

CSTCR7M00G53-R0

RoHS REACH

Applications

Unsuitable Applications	Please be sure to read and comply with these "Precautions for use".
Specific Applications	Consumer equipment,Industrial equipment except for transportation & facility & energy equipment,Medical equipment [GHTF A/B],Mobile Electronics Please refer to Our Website and specifications, etc. for information about the performance, functions, quality, management, and safety required for the above applications, and use Products after confirming the performance and reliability of the actual Product.

Attention
1. This datasheet is downloaded from the website of Murata Manufacturing Co., Ltd. Therefore, it's specifications are subject to change or our products in it may be discontinued without advance notice. Please check with our sales representatives or product engineers before ordering.
2. This datasheet has only typical specifications because there is no space for detailed specifications.
Therefore, please review our product specifications or consult the approval sheet for product specifications before ordering.

Note: If you have not downloaded this document from our official website, please note that the information provided may not be the most current.
Please download the latest datasheet of CSTCR7M00G53-R0 from the official website of Murata
https://pim.murata.com/en-eu/pim/details/?partNum=CSTCR7M00G53-R0

CSTCR7M00G53-R0

Appearance & Shape



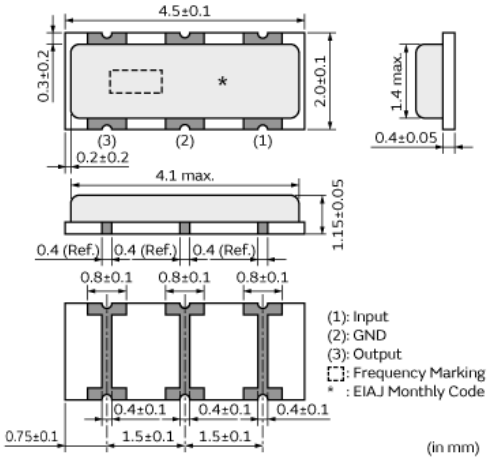

L x W (size)	4.5×2.0mm

Attention

1. This datasheet is downloaded from the website of Murata Manufacturing Co., Ltd. Therefore, it's specifications are subject to change or our products in it may be discontinued without advance notice. Please check with our sales representatives or product engineers before ordering.
2. This datasheet has only typical specifications because there is no space for detailed specifications.

Therefore, please review our product specifications or consult the approval sheet for product specifications before ordering.

Note: If you have not downloaded this document from our official website, please note that the information provided may not be the most current.
Please download the latest datasheet of CSTCR7M00G53-R0 from the official website of Murata
https://pim.murata.com/en-eu/pim/details/?partNum=CSTCR7M00G53-R0

CSTCR7M00G53-R0

Specifications

Series	CSTCR_G
Frequency	7.000MHz
Frequency Tolerance	±0.50%
Operating Temperature	-20～80℃
Frequency Shift by Temperature	±0.2%
Frequency Aging	±0.1%
ESR/R1	50Ω
Shape	SMD
Product Type	Ceramic Resonator (CERALOCK)
Wash	Not available

Attention
1. This datasheet is downloaded from the website of Murata Manufacturing Co., Ltd. Therefore, it's specifications are subject to change or our products in it may be discontinued without advance notice. Please check with our sales representatives or product engineers before ordering.
2. This datasheet has only typical specifications because there is no space for detailed specifications.
Therefore, please review our product specifications or consult the approval sheet for product specifications before ordering.

Note: If you have not downloaded this document from our official website, please note that the information provided may not be the most current.
Please download the latest datasheet of CSTCR7M00G53-R0 from the official website of Murata
https://pim.murata.com/en-eu/pim/details/?partNum=CSTCR7M00G53-R0

CSTCR7M00G53-R0

Features

MURATA's package technology expertise has enabled the development of the Chip CERALOCK. High-density mounting can be realized because of the small package and the elimination of the need for an external load capacitor.

Features

1. Oscillation circuits do not require external load capacitors.
2. Available in a wide frequency range.
3. Extremely small and have a low profile.
4. No adjustment is necessary for oscillation circuits.

References

Packaging	Specifications	Standard Packing Quantity
R0	180mm Embossed Tape	3000

Mass(Typ.)	
1 piece	29mg

Attention
1. This datasheet is downloaded from the website of Murata Manufacturing Co., Ltd. Therefore, it's specifications are subject to change or our products in it may be discontinued without advance notice. Please check with our sales representatives or product engineers before ordering.
2. This datasheet has only typical specifications because there is no space for detailed specifications.
Therefore, please review our product specifications or consult the approval sheet for product specifications before ordering.