# Crystal Oscillator (SPXO)

· Package size (2.5 mm × 2.0 mm × 0.74 mm)
· Fundamental mode SPXO
· Output: LVPECL
· Reference weight Typ.12 mg

## [ 1 ] Product Number / Product Name / Marking

(1-1) Product Number / Ordering Code

**X1G0058810001xx**

Last 2 digits code(**xx**) defines Quantity.
The standard is "15", 2 000 pcs/Reel.

(1-2) Product Name / Model Name

**SG2520EGN 156.250000MHz CJGPZA**

## [ 2 ] Operating Range

| Parameter | Symbol | Specifications | | | Unit | Conditions |
|---|---|---|---|---|---|---|
| | | Min. | Typ. | Max. | | |
| Supply voltage | $V_{CC}$ | 3.135 | 3.3 | 3.465 | V | - |
| | GND | 0 | - | 0 | V | - |
| Input voltage | $V_{IN}$ | 0 | - | $V_{CC}$ | V | - |
| Operating temperature range | T_use | -40 | - | +85 | °C | - |
| ECL load condition | L_ECL | - | 50 | - | Ω | Terminated to $V_{CC}$ - 2.0 V |

## [ 3 ] Frequency Characteristics

(Unless stated otherwise [ 2 ] Operating Range)

| Parameter | Symbol | Specifications | | | Unit | Conditions |
|---|---|---|---|---|---|---|
| | | Min. | Typ. | Max. | | |
| Output frequency | fo | - | 156.250000 | - | MHz | - |
| Frequency tolerance *1 | f_tol | -50 | - | +50 | $\times 10^{-6}$ | T_use |

*1 Frequency tolerance includes Initial frequency tolerance, Frequency / temperature characteristics, Frequency / voltage coefficient and aging (10 years, +25 ºC).

## [ 4 ] Electrical Characteristics

(Unless stated otherwise [ 2 ] Operating Range)

| Parameter | Symbol | Specifications | | | Unit | Conditions |
|---|---|---|---|---|---|---|
| | | Min. | Typ. | Max. | | |
| Start-up time | t_str | - | - | 10 | ms | t = 0 at 90 % Vcc |
| Current consumption | $I_{CC}$ | - | - | 60 | mA | |
| Disable current | I_dis | - | - | 35 | mA | OE = GND |
| Output voltage | $V_{OH}$ | $V_{CC}$ - 1.1 | - | - | V | DC level |
| | $V_{OL}$ | - | - | $V_{CC}$ - 1.5 | V | DC level |
| Differential swing | $V_{SW}$ | 800 | - | 2 000 | mV | Differential output peak to peak voltage |
| Rise time | tr | - | - | 0.35 | ns | 20 % to 80 % of ($V_{OH}$ - $V_{OL}$) |
| Fall time | tf | - | - | 0.35 | ns | 80 % to 20 % of ($V_{OH}$ - $V_{OL}$) |
| Symmetry | SYM | 45 | 50 | 55 | % | At output crossing point |
| Input voltage | $V_{IH}$ | 70 % Vcc | - | - | V | OE terminal |
| | $V_{IL}$ | - | - | 30 % Vcc | V | OE terminal |
| Output disable time (OE) | tstp_oe | - | - | 100 | ns | OE terminal HIGH → LOW |
| Output enable time (OE) | tsta_oe | - | - | 500 | ns | OE terminal LOW → HIGH |
| Phase jitter | $t_{PJ}$ | - | - | 70 | fs | Offset freq.: 12 kHz to 20 MHz |

**[ For other general specifications, please refer to the attached Full Data Sheet below ]**

# Low Phase Jitter Crystal Oscillator: SG2016EGN/SG2520EGN

## Features

- Crystal oscillator (SPXO)
- Frequency range (fo): 25 MHz to 500 MHz
- Output: LVPECL
- Supply voltage: 2.5 V Typ. / 3.3 V Typ.
- Operating temperature: -40 °C to +105 °C
- Low phase jitter: 44 fs Typ. (fo = 156.25 MHz)




## Applications

- Network equipment (Router, Switch, Optical module, etc.)
- Data center
- Test and Measurement Equipment, Factory Automation
- High Speed Converters like ADC and DAC

## Description

5G will increase network communication traffic exponentially. A 5G communication network requires high-speed and wide-bandwidth, while minimizing noise. This will be achieved with a high frequency, low jitter reference clock for the communication equipment where small form factor optical modules will be used.
The SG2016EGN/SG2520EGN is the next generation to the very popular SG3225EEN family offering the same combination of features with a wide range of available frequencies, low jitter, and improved frequency tolerance performance due to using an in-house designed IC with temperature compensation in a smaller package.

## Outline Drawing and Terminal Assignment

SG2016EGN

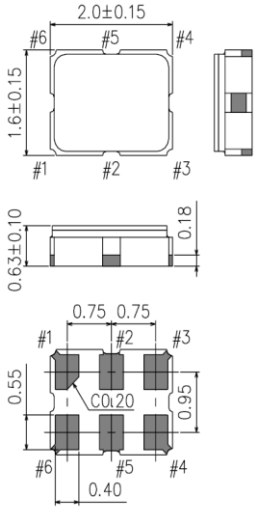


SG2520EGN

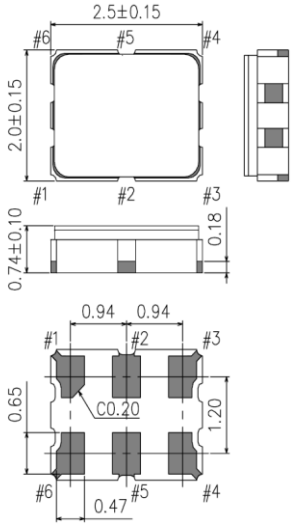


| Pin | Connection |
|---|---|
| 1 | OE/$\overline{ST}$ |
| 2 | N.C. (Open or $V_{CC}$) |
| 3 | GND |
| 4 | OUT |
| 5 | $\overline{OUT}$ |
| 6 | $V_{CC}$ |

## Typical Performance

Phase Noise (fo = 156.25 MHz, $V_{CC}$ = 3.3 V)

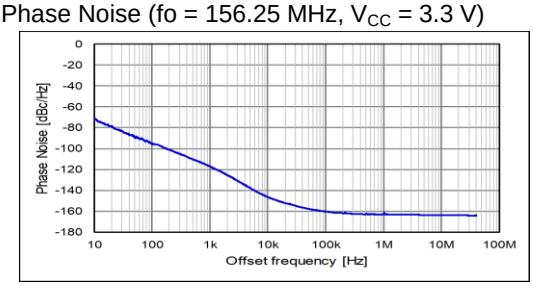


Phase Jitter (12 kHz to 20 MHz): 44 fs Typ.

[ 1 ] Product Number / Product Name

(1-1) Product Number

SG2016EGN: X1G006131xxxx15

SG2520EGN: X1G005881xxxx15 (Please contact Epson for details)

(1-2) Product Name (Standard Form)

SG2016 EGN 156.250000MHz C J G P Z A

① ② ③ ④ ⑤ ⑥ ⑦ ⑧ ⑨

①Model
②Output (E: LVPECL)
③Frequency
④Supply voltage
⑤Frequency tolerance
⑥Operating temperature
⑦Function
⑧Output disable status
(Z: High impedance)
⑨Internal identification code (A: default)

| ④Supply voltage | |
|---|---|
| D | 2.5 V Typ. |
| C | 3.3 V Typ. |

| ⑥Operating temperature | |
|---|---|
| G | -40 °C to +85 °C |
| H | -40 °C to +105 °C |

| ⑤Frequency tolerance | |
|---|---|
| D | ±25 × $10^{-6}$ |
| J | ±50 × $10^{-6}$ |

| ⑦Function | |
|---|---|
| P | Output Enable |
| S | Standby |

[ 2 ] Absolute Maximum Ratings

| Parameter | Symbol | Specification | | | Unit | Conditions |
|---|---|---|---|---|---|---|
| | | Min. | Typ. | Max. | | |
| Maximum supply voltage | $V_{CC}$ | -0.3 | - | 4.0 | V | |
| Input voltage | Vin | -0.3 | - | $V_{CC}$ + 0.5 | V | OE/$\overline{ST}$ terminal |
| Storage temperature range | T_stg | -55 | - | +125 | °C | |

[ 3 ] Operating Range

| Parameter | Symbol | Specification | | | Unit | Conditions |
|---|---|---|---|---|---|---|
| | | Min. | Typ. | Max. | | |
| Supply voltage | $V_{CC}$ | 2.375 | 2.5 | 2.625 | V | Suffix: D |
| | | 3.135 | 3.3 | 3.465 | V | Suffix: C |
| Supply voltage | GND | 0.0 | 0.0 | 0.0 | V | |
| Operating temperature range | T_use | -40 | +25 | +85 | °C | Suffix: G |
| | | -40 | +25 | +105 | °C | Suffix: H |
| ECL load condition | L_ECL | 50 | | | Ω | Terminated to $V_{CC}$ - 2.0 V |

* Power supply startup time (0 %$V_{CC}$→90 %$V_{CC}$) should be more than 150 µs
* A 0.1 µF and a 10 µF bypass capacitor should be connected between $V_{CC}$ and GND pins located close to the device

[ 4 ] Frequency Characteristics (Unless stated otherwise [ 3 ] Operating Range)

| Parameter | Symbol | Specification | | | Unit | Conditions |
|---|---|---|---|---|---|---|
| | | Min. | Typ. | Max. | | |
| Output frequency *1 | fo | 25 | - | 500 | MHz | |
| Frequency tolerance *2 | f_tol | -25 | - | +25 | $\times10^{-6}$ | Suffix: D |
| | | -50 | - | +50 | $\times10^{-6}$ | Suffix: J |

*1 Please contact Epson for available frequencies

*2 Frequency tolerance includes Initial frequency tolerance, Frequency / temperature characteristics, Frequency / voltage coefficient and aging (10 years, +25 °C).

*Aging is estimated from environmental reliability tests; expected amount of the frequency variation. This does not intend to guarantee the product-life cycle.

[ 5 ] Electrical Characteristics (Unless stated otherwise [ 3 ] Operating Range)

| Parameter | Symbol | Specification | | | Unit | Conditions |
|---|---|---|---|---|---|---|
| | | Min. | Typ. | Max. | | |
| Startup time | t_str | - | - | 10 | ms | t = 0 at 90 % $V_{CC}$ |
| Current consumption | $I_{CC}$ | - | - | 60 | mA | |
| Disable current | I_dis | - | - | 35 | mA | OE = GND |
| Stand-by current | I_std | - | - | 30 | µA | $\overline{ST}$ = GND, T_use Max. = +85 °C |
| | | - | - | 60 | µA | $\overline{ST}$ = GND, T_use Max. = +105 °C |
| Rise time / Fall time | tr / tf | - | - | 0.35 | ns | 20 % - 80 % of ($V_{OH}$ - $V_{OL}$) |
| Symmetry | SYM | 45 | 50 | 55 | % | At output crossing point |
| Output voltage | $V_{OH}$ | $V_{CC}$ - 1.1 | - | - | V | DC level |
| | $V_{OL}$ | - | - | $V_{CC}$ - 1.5 | V | |
| Differential swing | $V_{SW}$ | 800 | - | 2 000 | mV | |
| Input voltage | $V_{IH}$ | 70 % $V_{CC}$ | - | - | V | OE/$\overline{ST}$ terminal |
| | $V_{IL}$ | - | - | 30 % $V_{CC}$ | V | |
| Output disable time (OE) | tstp_oe | - | - | 100 | ns | Measured from the time OE pin crosses 30 % $V_{CC}$ |
| Output disable time (ST) | tstp_st | - | - | 100 | ns | Measured from the time $\overline{ST}$ pin crosses 30 % $V_{CC}$ |
| Output enable time (OE) | tsta_oe | - | - | 500 | ns | Measured from the time OE pin crosses 70 % $V_{CC}$ |
| Output enable time (ST) | tsta_st | - | - | 10 | ms | Measured from the time $\overline{ST}$ pin crosses 70 % $V_{CC}$ |
| Phase jitter<br>Offset frequency<br>fo < 50 MHz: 12 kHz to 5 MHz<br>fo ≥ 50 MHz: 12 kHz to 20 MHz | $t_{PJ}$ | - | - | 250 | fs | fo < 100 MHz |
| | | - | - | 90 | fs | 100 MHz ≤ fo ≤ 156 MHz |
| | | - | - | 70 | fs | 156 MHz < fo ≤ 212 MHz |
| | | - | - | 60 | fs | 212 MHz < fo ≤ 391 MHz |
| | | - | - | 50 | fs | fo > 391 MHz |

[ 6 ] Thermal resistance (For reference only)

| Parameter | Symbol | Specification | | | Unit | Conditions |
|---|---|---|---|---|---|---|
| | | Min. | Typ. | Max. | | |
| Junction temperature | Tj | - | - | +140 | °C | |
| Junction to case | θjc | - | 114 | - | °C/W | SG2016EGN |
| | | - | 122 | - | °C/W | SG2520EGN |
| Junction to ambient | θja | - | 243 | - | °C/W | SG2016EGN |
| | | - | 155 | - | °C/W | SG2520EGN |

[ 7 ] Typical Performance Characteristics (For reference only)

The following data shows typical performance characteristics

(7-1) Frequency / Temperature Characteristics

fo = 156.25 MHz, -40 °C to +105 °C, reference at +25 °C

n = 50 pcs

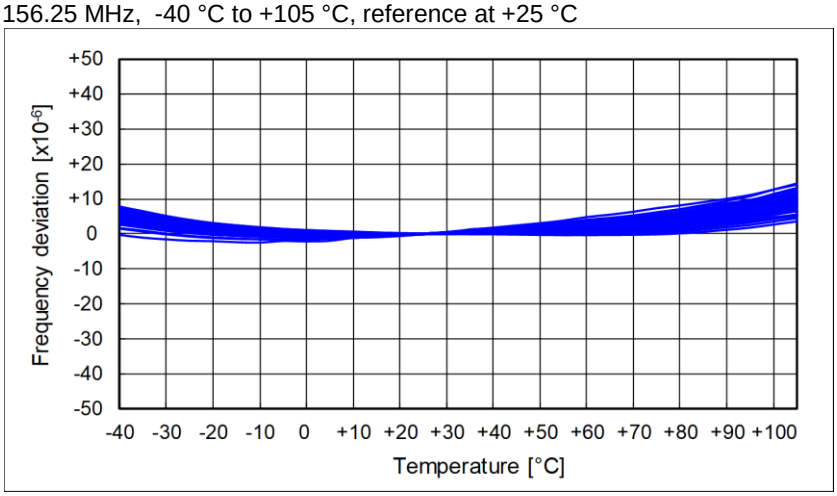


(7-2) Current Consumption

T_use = +25 °C, Frequency Dependency

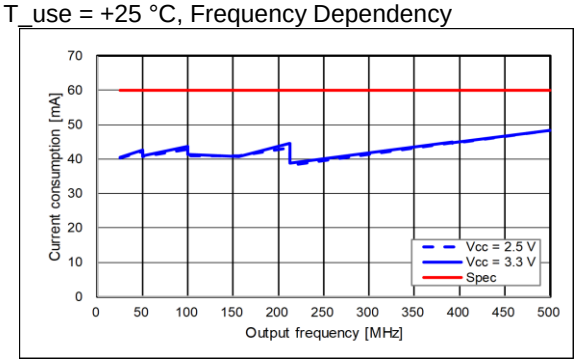


$V_{CC}$ = 2.5 V, Temperature Characteristic

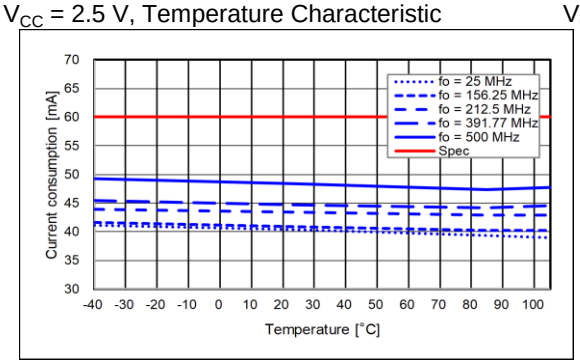


$V_{CC}$ = 3.3 V, Temperature Characteristic

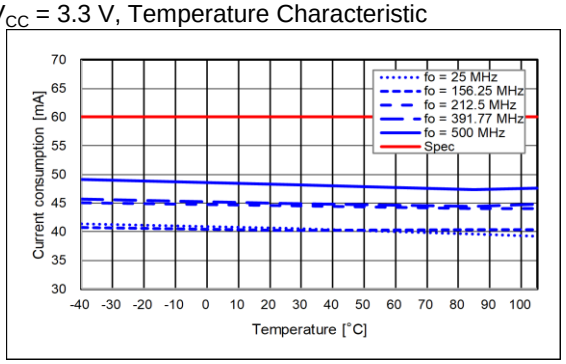

(7-3) Rise Time / Fall Time Temperature Characteristic

fo = 156.25 MHz

Rise Time

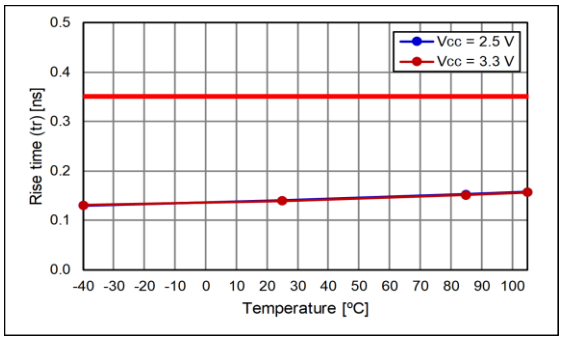


Fall Time

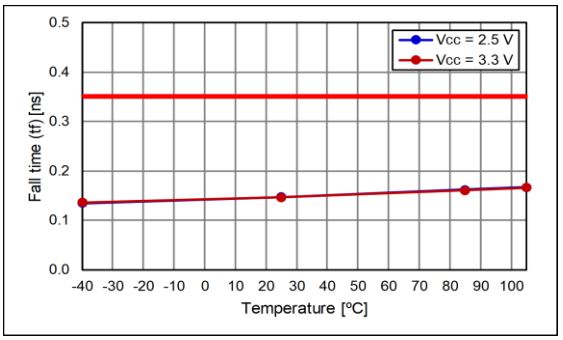


fo = 391.77 MHz

Rise Time

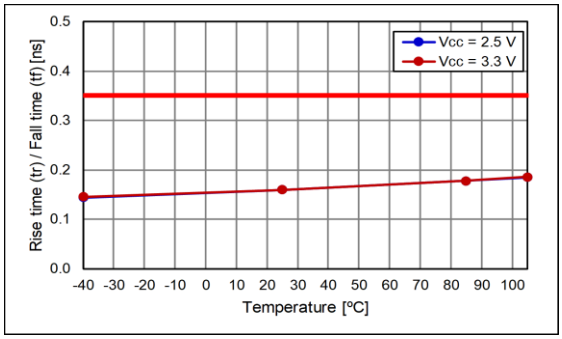


Fall Time

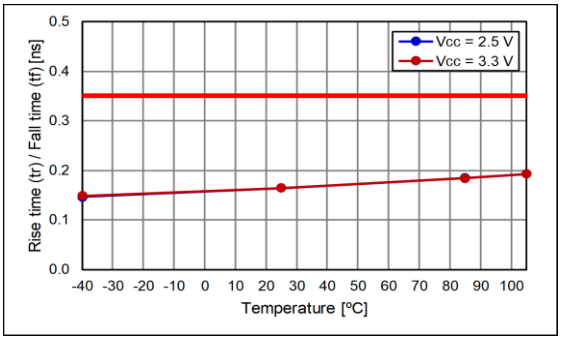


(7-4) Symmetry Temperature Characteristic

fo = 156.25 MHz

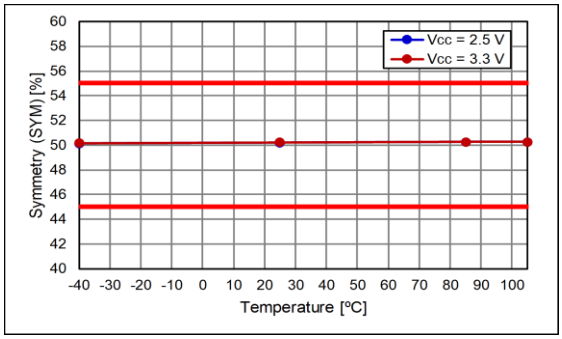


fo = 391.77 MHz

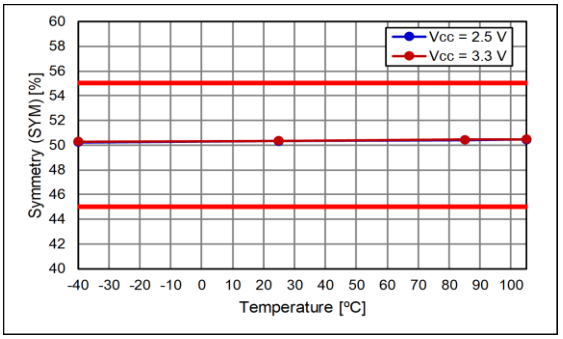


(7-5) Output Voltage Temperature Characteristic

$V_{OH}$

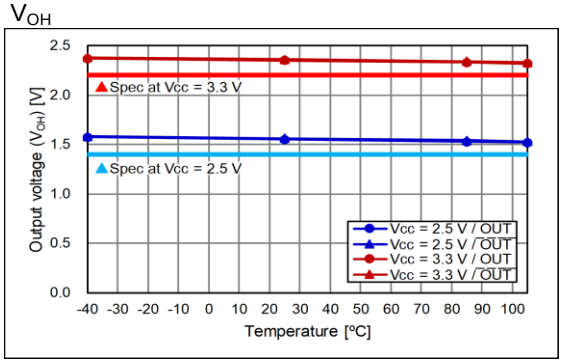


$V_{OL}$

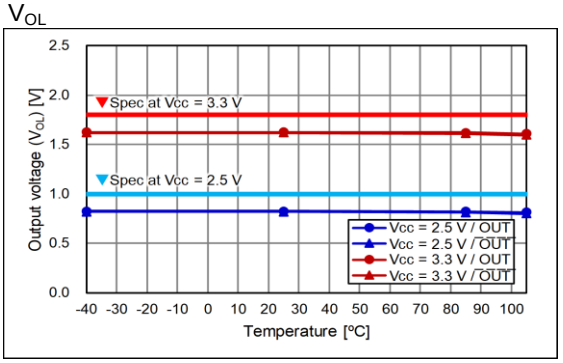

(7-6) Differential Swing Temperature Characteristic

fo = 156.25 MHz

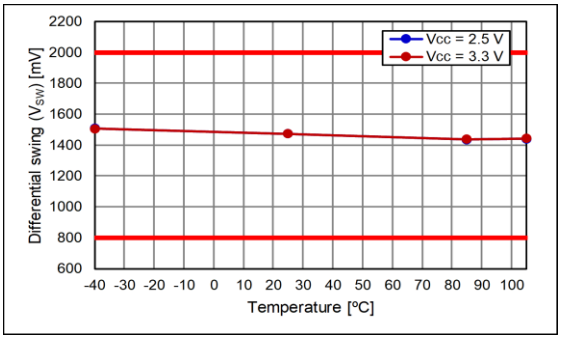


fo = 391.77 MHz

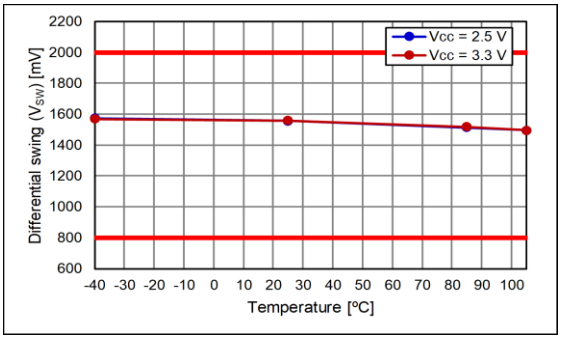


(7-7) Phase Noise and Phase Jitter

fo = 156.25 MHz, T_use = +25 °C

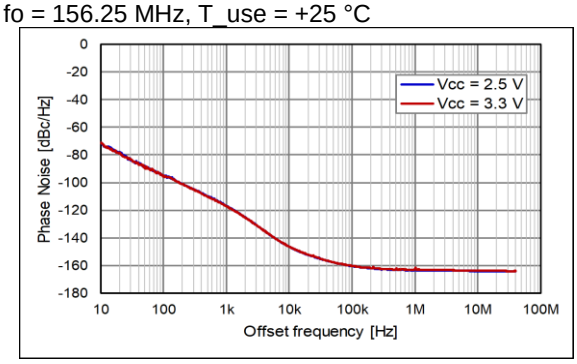


| $V_{CC}$ | Phase Jitter* |
|---|---|
| 2.5 V | 42 fs |
| 3.3 V | 44 fs |

* Offset frequency: 12 kHz to 20 MHz

[ 8 ] Test Circuit

(8-1) Output Frequency and Current Consumption Test Setup

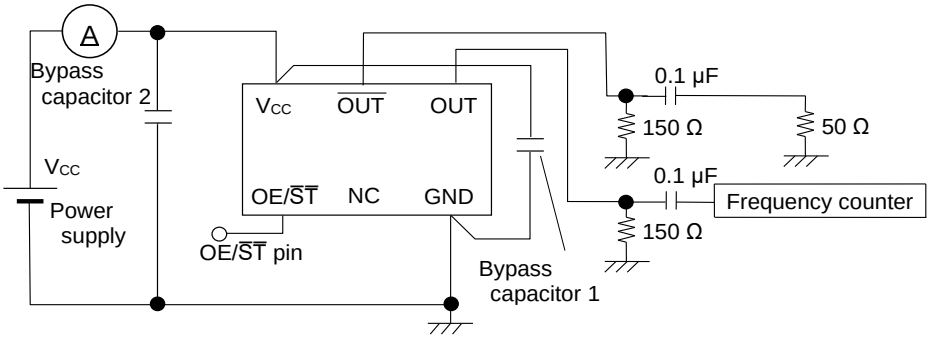


* To measure Disable current or Stand-by current, OE/$\overline{ST}$ terminal is connected to GND

(8-2) Waveform Observation Test Setup

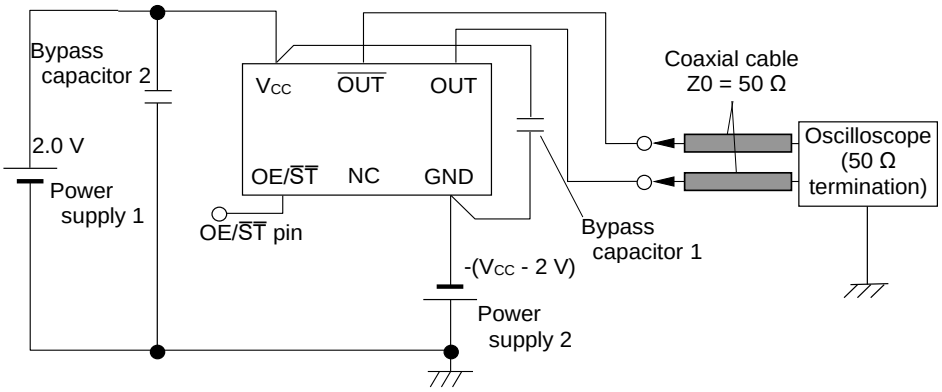


* Each output trace should be same length

(8-3) Conditions

(1) Oscilloscope

The bandwidth should be a minimum of 5 times the measurement frequency

(2) A 0.1 µF and a 10 µF bypass capacitor should be connected between $V_{CC}$ and GND pins located close to the device

(3) Use a current meter with a low internal impedance

(4) Power Supply

Power supply startup time (0 % $V_{CC}$→90 % $V_{CC}$) should be more than 150 µs

Power supply impedance should be as low as possible

(8-4) Timing Chart

(1) Output Waveform and Level

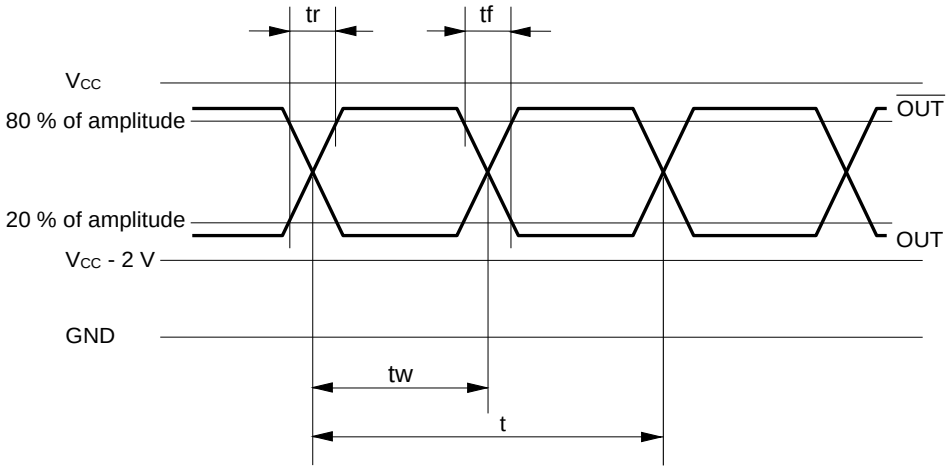


SYM = tw / t × 100 [%]

(2) Output Frequency Timing

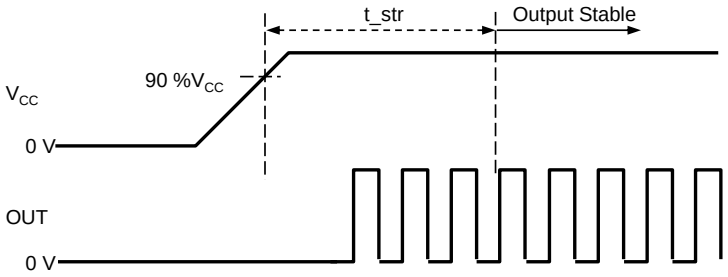


(3) OE/$\overline{ST}$ Function and Timing

| OE/$\overline{ST}$ Terminal | Osc. Circuit | Output status |
|---|---|---|
| "H" or OPEN | Oscillation | Specified frequency is output: Enable |
| "L" | OE: Oscillation | Output becomes high impedance: Disable |
| | $\overline{ST}$: Oscillation stop | |

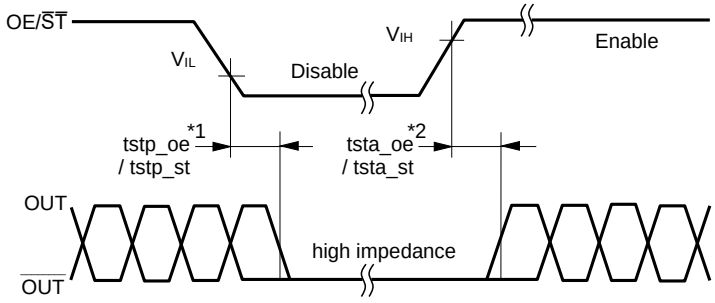


*1 The period from OE/$\overline{ST}$ = $V_{IL}$ to OUT = High impedance (Disable)

*2 The period from OE/$\overline{ST}$= $V_{IH}$ to OUT = Enable

* OE/$\overline{ST}$ terminal voltage level should not exceed supply voltage when using OE/$\overline{ST}$ function. Please note that OE/$\overline{ST}$ rise time should not exceed supply voltage rise time at the start-up.

[ 9 ] Outline Drawing and Recommended Footprint

(9-1) SG2016EGN

Units: mm

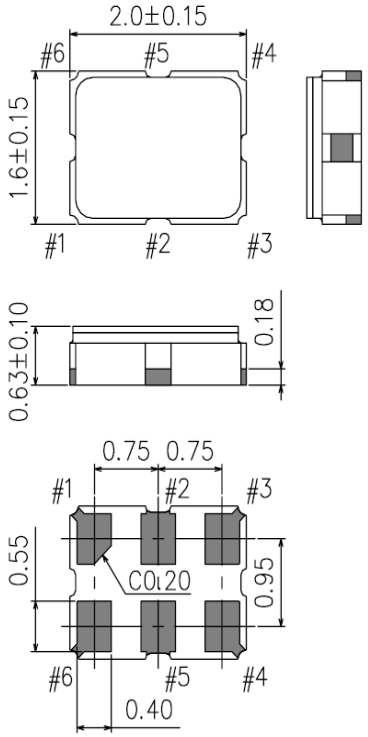


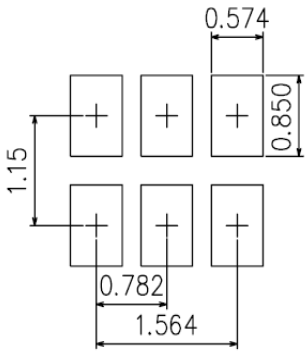


For stable operation, it is recommended that 0.1 µF and 10 µF bypass capacitors should be connected between $V_{CC}$ and GND and placed as close to the $V_{CC}$ pin as possible.

Terminal coating: Au plating

Reference Weight Typ.: 7.6 mg

Terminal Assignment

| Pin # | Connection | Function | | | |
|---|---|---|---|---|---|
| #1 | OE/$\overline{ST}$ | OE/$\overline{ST}$ terminal / active high | | | |
| | | | OE/$\overline{ST}$ Terminal | Osc. Circuit | Output status |
| | | | "H" or OPEN | Oscillation | Specified frequency is output: Enable |
| | | | "L" | OE: Oscillation | Output becomes high impedance: Disable |
| | | | | $\overline{ST}$: Oscillation stop | |
| #2 | NC | – | | | |
| #3 | GND | GND terminal | | | |
| #4 | OUT | Output terminal (Positive) | | | |
| #5 | $\overline{OUT}$ | Output terminal (Negative) | | | |
| #6 | $V_{CC}$ | $V_{CC}$ terminal | | | |

Marking

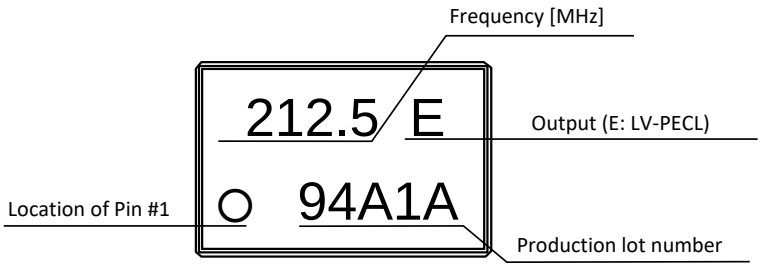

(9-2) SG2520EGN

Units: mm

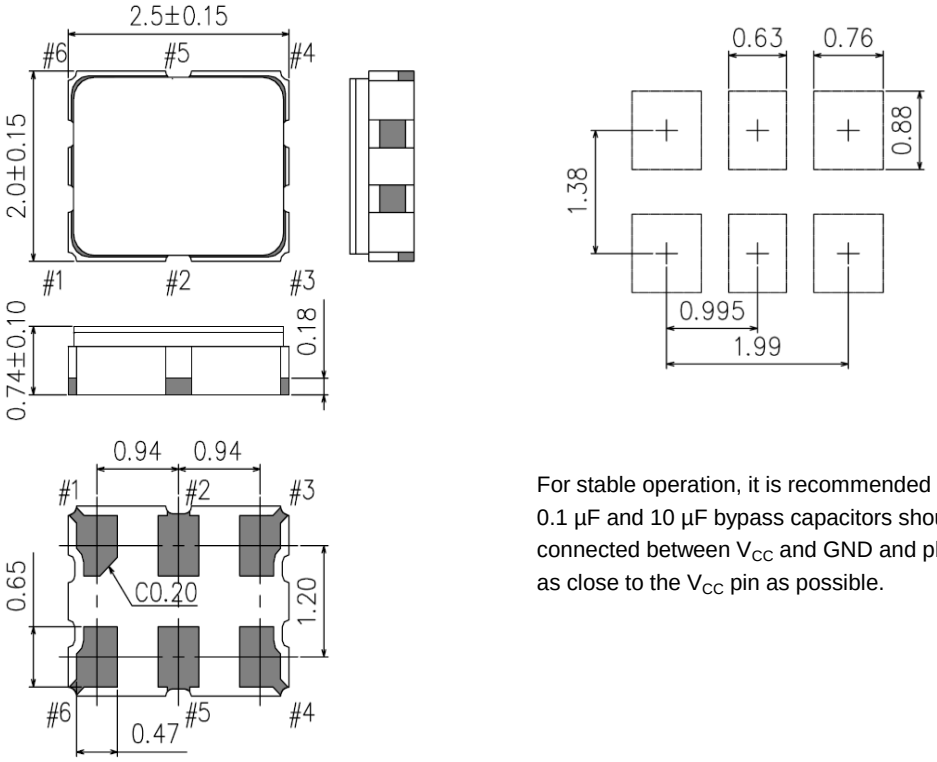


For stable operation, it is recommended that 0.1 µF and 10 µF bypass capacitors should be connected between $V_{CC}$ and GND and placed as close to the $V_{CC}$ pin as possible.

Terminal coating: Au plating

Reference Weight Typ.: 11.8 mg

Terminal Assignment

| Pin # | Connection | Function | | | |
|---|---|---|---|---|---|
| #1 | OE/$\overline{ST}$ | OE/$\overline{ST}$ terminal / active high | | | |
| | | | OE/$\overline{ST}$ Terminal | Osc. Circuit | Output status |
| | | | "H" or OPEN | Oscillation | Specified frequency is output: Enable |
| | | | "L" | OE: Oscillation | Output becomes high impedance: Disable |
| | | | | $\overline{ST}$: Oscillation stop | |
| #2 | NC | – | | | |
| #3 | GND | GND terminal | | | |
| #4 | OUT | Output terminal (Positive) | | | |
| #5 | $\overline{OUT}$ | Output terminal (Negative) | | | |
| #6 | $V_{CC}$ | $V_{CC}$ terminal | | | |

Marking

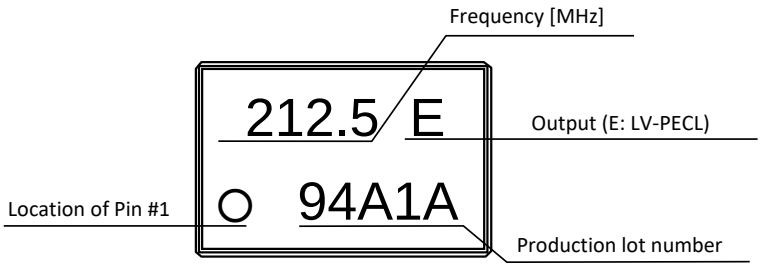

[ 10 ] Moisture Sensitivity Level

| Parameter | Specification | Conditions |
|---|---|---|
| MSL | LEVEL 1 | IPC/JEDEC J-STD-020D.1 |

[ 11 ] Reflow Profile

IPC/JEDEC J-STD-020D.1

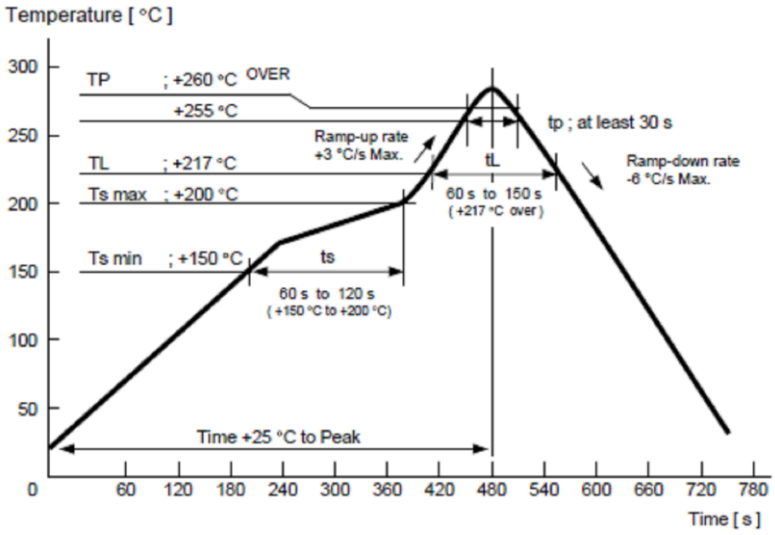

[ 12 ] Packing Information

(12-1) SG2016EGN

(1) Packing Quantity

The last two digits of the Product Number (X1G006131**xx**) are a code that defines the packing quantity. The standard is "15" for a 2 000 pcs/Reel.

(2) Taping Specification

Subject to EIA-481, IEC-60286 and JIS C0806

1) Tape Dimensions

Carrier Tape Material: Black conductive PS (Polystyrene)

Top Tape Material: Antistatic PET (Polyethylene Terephthalate) + PE (Polyethylene)

Units: mm

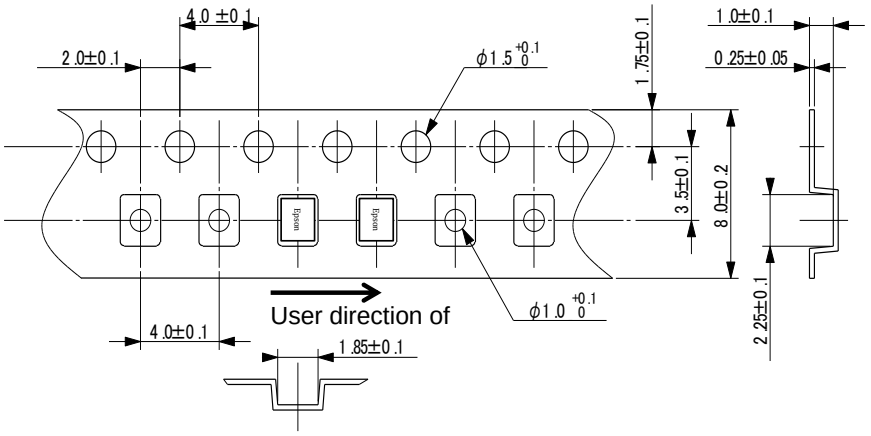


2) Reel Dimensions

Reel Material: Black conductive PS (Polystyrene)

Units: mm

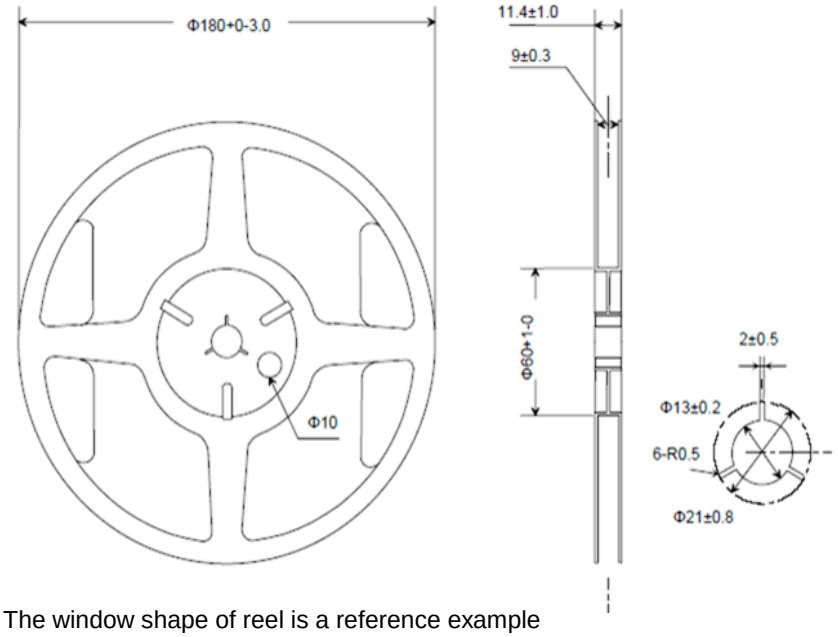


* The window shape of reel is a reference example

3) Storage Environment

We recommend to keep at normal temperature and normal humidity in a packed condition.

(12-2) SG2520EGN

(1) Packing Quantity

The last two digits of the Product Number (X1G005881xxxx**xx**) are a code that defines the packing quantity. The standard is "15" for a 2 000 pcs/Reel.

(2) Taping Specification

Subject to EIA-481, IEC-60286 and JIS C0806

1) Tape Dimensions

Carrier Tape Material: Black conductive PS (Polystyrene)

Top Tape Material: Antistatic PET (Polyethylene Terephthalate) + PE (Polyethylene)

Units: mm

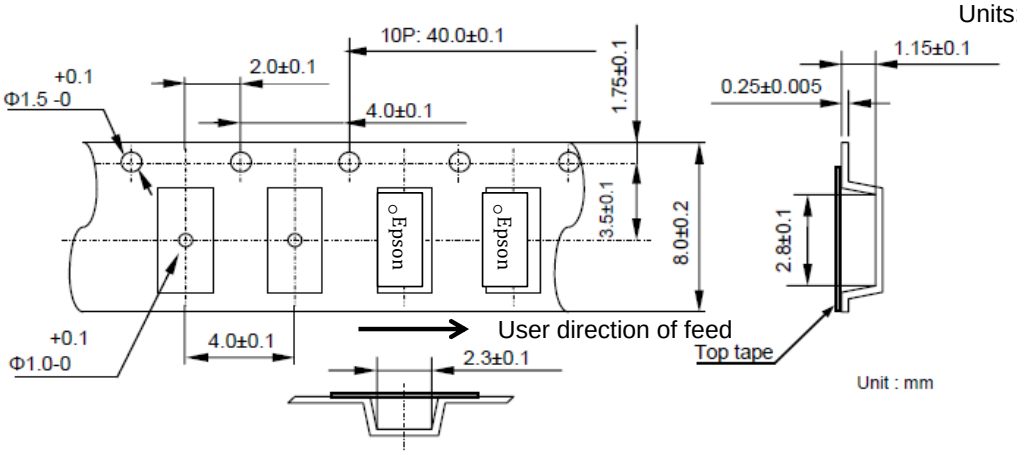


2) Reel Dimensions

Reel Material: Black conductive PS (Polystyrene)

Units: mm

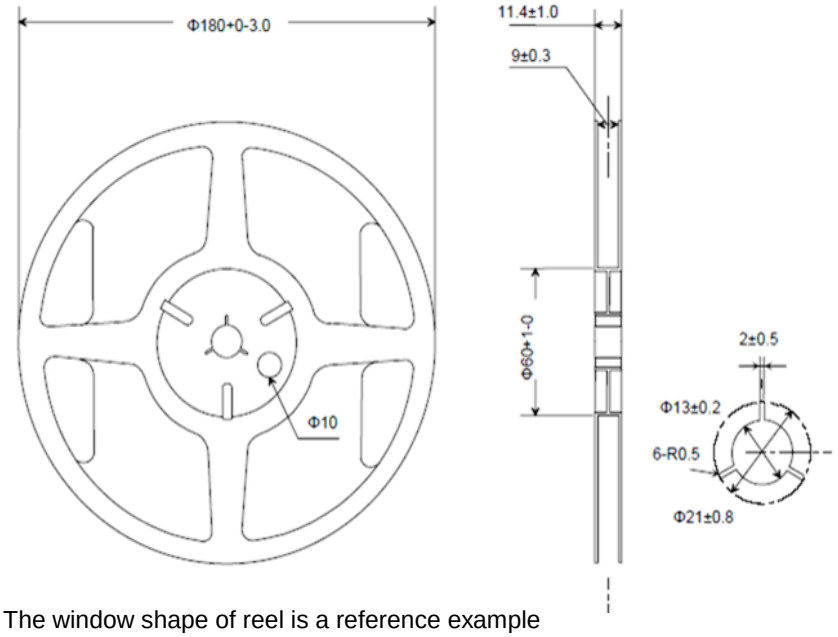


* The window shape of reel is a reference example

3) Storage Environment

We recommend to keep at normal temperature and normal humidity in a packed condition.

## [ 13 ] Handling Precautions

Prior to using this product, please carefully read the section entitled “Precautions” on our Web site (https://www5.epsondevice.com/en/information/#precaution) for instructions on how to handle and use the product properly to ensure optimal performance of the product in your equipment.
Before using the product under any conditions other than those specified therein, please consult with us to verify and confirm that the performance of the product will not be negatively affected by use under such conditions.
In addition to the foregoing precautions, in order to avoid the deteriorating performance of the product, we strongly recommend that you DO NOT use the product under ANY of the following conditions:

(1) Do not expose this product to excessive mechanical shock or vibration.
(2) This product can be damaged by mechanical shock during the soldering process depending on the equipment used, process conditions, and any impact forces experienced. Always follow appropriate procedures, particularly when changing the assembly process in any way and be sure to follow applicable process qualification standards before starting production.
(3) These devices are sensitive to ESD, use appropriate precautions during handling, assembly, test, shipment, and installation.
(4) The use of ultrasonic technology for cleaning, bonding, etc. can damage the Xtal unit inside this product. Please carefully check for this consideration before using ultrasonic equipment for volume production with this product.
(5) Noise and ripple on the power supply may have undesirable affects on operation and cause degradation of phase noise characteristics. Evaluate the operation of this device with appropriate power supplies carefully before use.
(6) When applying power, ensure that the supply voltage increases monotonically for proper operation. On power down, do not reapply power until the supplies, bypass capacitors, and any bulk capacitors are completely discharged since that may cause the unit to malfunction.
(7) Aging specifications are estimated from environmental reliability tests and expected frequency variation over time. They do not provide a guarantee of aging over the product lifecycle.
(8) The metal cap on top of the device is directly connected to the GND terminal (pin #2). Take necessary precautions to prevent any conductor not at ground potential from contacting the cap as that could cause a short circuit to GND.
(9) To avoid any issues due to interference of other signal lines, please take care not to place signal lines near the product as this may have an adverse affect on the performance of the product.
(10) A bypass capacitor of the recommended value(s) must be connected between the $V_{CC}$ and GND terminals of the product. Whenever possible, mount the capacitor(s) on the same side of the PCB and as close to the product as possible to keep the routing traces short.
(11) Power supply connections to $V_{CC}$ and GND pins should be routed as thick as possible while keeping the high frequency impedance low in order to get the best performance.
(12) The use of a filter or similar element in series with the power supply connections to protect from electromagnetic radiation noise may increase the high frequency impedance of the power supply line and may cause the oscillator to not operate properly. Please verify the design to ensure sufficient operational margin prior to use.
(13) Keep PCB routing from the output terminal(s) to the load as short as possible for best performance.
(14) The Enable (OE or $\overline{ST}$) input terminal is high impedance and so susceptible to noise. Connect it to a low impedance source when used and when not used it is recommended to connect it to Vcc for active high inputs and GND for active low inputs.
(15) Do not short the output to GND as that will damage the product. Always use with an appropriate load resistor connected.
(16) This product should be reflowed no more than 3 times. If rework is needed after reflow, please correct it with a soldering iron with the tip set for a temperature of +350 °C or less and only contact each terminal once and for no more than 5 seconds. If this product is mounted on the bottom of the board during a reflow please check that it soldered down properly afterwards.

[Availability of mounting conditions]

| | |
|---|---|
| Reflow on the board | Available |
| Reflow under the board | The parts may fall. Please judge whether it is possible to implement. |
| Soldering pot/bath (Dip soldering system, Flow soldering system) | **Not Available** |
| Soldering iron | Available |

(17) Product failures during the warranty period only apply when the product is used according to the recommended operating conditions described in the specifications. Products that have been opened for analysis or damaged will not be covered. It is recommended to store and use in normal temperature and humidity environments described in the specifications to ensure frequency accuracy and prevent moisture condensation. If the product is stored for more than one year, please confirm the pin solderability prior to use.
(18) If the oscillation circuit is exposed to condensation, the frequency may change or oscillation may stop. Do not use in any conditions where condensation occurs.
(19) Do not store or use the product in an environment where it can be exposed to chemical substances that are corrosive to metal or plastics such as salt water, organic solvents, chemical gasses, etc. Do not use the product when it is exposed to sunlight, dust, corrosive gasses, or other materials for long periods of time.
(20) When using water-soluble solder flux make sure to completely remove the flux residue after soldering. Pay particular attention when the residues contain active halogens which will negatively affect the product and its performance.
(21) Terminals on the side of the product are internally connected to the IC, be careful not to cause short-circuits or reduce the insulation resistance of them in any way.
(22) Should any customer use the product in any manner contrary to the precautions and/or advice herein, such use shall be done at the customer’s own risk.

## PROMOTION OF ENVIRONMENTAL MANAGEMENT SYSTEM CONFORMING TO INTERNATIONAL STANDARDS

At Seiko Epson, all environmental initiatives operate under the Plan-Do-Check-Action (PDCA) cycle designed to achieve continuous improvements. The environmental management system (EMS) operates under the ISO 14001 environmental management standard.

All of our major manufacturing and non-manufacturing sites, in Japan and overseas, completed the acquisition of ISO 14001 certification.

ISO 14000 is an international standard for environmental management that was established by the International Standards Organization in 1996 against the background of growing concern regarding global warming, destruction of the ozone layer, and global deforestation.

## WORKING FOR HIGH QUALITY

In order provide high quality and reliable products and services than meet customer needs, Seiko Epson made early efforts towards obtaining ISO9000 series certification and has acquired ISO9001 for all business establishments in Japan and abroad. We have also acquired IATF 16949 certification that is requested strongly by major manufacturers as standard.

IATF 16949 is the international standard that added the sector-specific supplemental requirements for automotive industry based on ISO9001.

■ Explanation of marks used in this datasheet

| | |
|---|---|
| Pb Free | **●Pb free.** |
| RoHS Compliant | **●Complies with EU RoHS directive.**<br>*About the products without the Pb-free mark.<br>Contains Pb in products exempted by EU RoHS directive<br>(Contains Pb in sealing glass, high melting temperature type solder or other) |

NOTICE: PLEASE READ CAREFULLY BELOW BEFORE THE USE OF THIS DOCUMENT ©Seiko Epson Corporation

1. The content of this document is subject to change without notice. Before purchasing or using Epson products, please contact with sales representative of Seiko Epson Corporation (“Epson”) for the latest information and be always sure to check the latest information published on Epson’s official web sites and resources.
2. This document may not be copied, reproduced, or used for any other purposes, in whole or in part, without Epson’s prior consent.
3. Information provided in this document including, but not limited to application circuits, programs and usage, is for reference purpose only. Epson makes no guarantees against any infringements or damages to any third parties’ intellectual property rights or any other rights resulting from the information. This document does not grant you any licenses, any intellectual property rights or any other rights with respect to Epson products owned by Epson or any third parties.
4. Using Epson products, you shall be responsible for safe design in your products; that is, your hardware, software, and/or systems shall be designed enough to prevent any critical harm or damages to life, health or property, even if any malfunction or failure might be caused by Epson products. In designing your products with Epson products, please be sure to check and comply with the latest information regarding Epson products (including, but not limited to this document, specifications, data sheets, manuals, and Epson’s web site). Using technical contents such as product data, graphic and chart, and technical information, including programs, algorithms and application circuit examples under this document, you shall evaluate your products thoroughly both in stand-alone basis and within your overall systems. You shall be solely responsible for deciding whether to adopt/use Epson products with your products.
5. Epson has prepared this document carefully to be accurate and dependable, but Epson does not guarantee that the information is always accurate and complete. Epson assumes no responsibility for any damages you incurred due to any misinformation in this document.
6. No dismantling, analysis, reverse engineering, modification, alteration, adaptation, reproduction, etc., of Epson products is allowed.
7. Epson products have been designed, developed and manufactured to be used in general electronic applications and specifically requires particular quality or extremely high reliability in order to refrain from causing any malfunction or failure leading to critical harm to life and health, serious property damage, or severe impact on society, including, but not limited to listed below (“Specific Purpose”). Therefore, you are strongly advised to use Epson products only for the Anticipated Purpose. Should you desire to purchase and use Epson products for Specific Purpose, Epson makes no warranty and disclaims with respect to Epson products, whether express or implied, including without limitation any implied warranty of merchantability or fitness for any Specific Purpose. Please be sure to contact our sales representative in advance, if you desire Epson products for Specific Purpose:
   Space equipment (artificial satellites, rockets, etc.)/ Transportation vehicles and their control equipment (automobiles, aircraft, trains, ships, etc.) / Medical equipment/ Relay equipment to be placed on sea floor/ Power station control equipment / Disaster or crime prevention equipment/Traffic control equipment/ Financial equipment
   Other applications requiring similar levels of reliability as the above
8. Epson products listed in this document and our associated technologies shall not be used in any equipment or systems that laws and regulations in Japan or any other countries prohibit to manufacture, use or sell. Furthermore, Epson products and our associated technologies shall not be used for the purposes of military weapons development (e.g. mass destruction weapons), military use, or any other military applications. If exporting Epson products or our associated technologies, please be sure to comply with the Foreign Exchange and Foreign Trade Control Act in Japan, Export Administration Regulations in the U.S.A (EAR) and other export-related laws and regulations in Japan and any other countries and to follow their required procedures.
9. Epson assumes no responsibility for any damages (whether direct or indirect) caused by or in relation with your non-compliance with the terms and conditions in this document or for any damages (whether direct or indirect) incurred by any third party that you give, transfer or assign Epson products.
10. For more details or other concerns about this document, please contact our sales representative.
11. Company names and product names listed in this document are trademarks or registered trademarks of their respective companies.