SerialNo. :2014-0299
DATE :2014/03/09

THCHTOTOP.

ITEM : CRYSTAL OSCILLATOR

TYPE :	DSB321SDA
NOMINAL FREQUENCY :	16.367667MHz
SPEC No. :	1XTW16367CFB

Please acknowledge receipt of this specification by signing and returning a copy to us.

RECEIPT	
DATE	
RECEIVED	(signature) (name)

General Manufacturer of Quartz Devices

DAISHINKU CORP.

1389 Shinzaike, Hiraoka-cho, Kakogawa, Hyogo
675-0194 Japan
Phone (81)79-425-3141 Fax (81)79-425-1134
http://www.kds.info/index_en.htm

C.ENG. T. Matsumoto

ENG. H. Takase

1. Device Name TCXO
2. Model Name DSB321SDA
3. Nominal Frequency 16.367667 MHz
4. Mass 0.03g max.
5. Absolute Maximum Ratings

	Item	Symbol	Rating	unit
1	Supply Voltage	V_{CC}	-0.3 ~ +6.0	V
2	Storage Temperature Range	$T_{_STG}$	-40 ~ +85	°C

6. Recommended Operating Conditions

	Item	Symbol	min.	typ.	max.	unit
1	Supply Voltage	V_{CC}	+3.135	+3.3	+3.465	V
2	Load Impedance (resistance part)	L_{oad}_R	9	10	11	kΩ
	(parallel capacitance)	L_{oad}_C	9	10	10	pF
3	Operable Temperature Range	$T_{_OPR}$	-30	-	+85	°C

7. Electrical Characteristics

(T_A=-30 ~ +85°C, L_{oad}_R//C=10kΩ//10pF, V_{CC}=+3.3V, unless otherwise noted)

	Item	Conditions	Limits			unit	Notes
			min.	typ.	max.		
1	Current Consumption		-	-	1.5	mA	
2	Output Level		0.8	-	-	V_{P-P}	1
3	Symmetry	GND level(DC cut)	40/60	-	60/40	%	
4	Frequency Stability						
	1.Tolerance	Initial Tolerance(T_A=+25°C)	-	-	±0.5	ppm	2
		After 2 times reflow(T_A=+25°C)	-	-	±1.0	ppm	3,6
	2.vs Temperature	T_A=-30 ~ +85°C	-	-	±0.5	ppm	4
	3.vs Slope	T_A=-30 ~ +85°C	-	-	±0.1	ppm/°C	5
	4.vs Supply Voltage	V_{CC}=+3.3V±5%	-	-	±0.1	ppm	
	5.vs Load Variation	L_{oad}_R//C=(10kΩ//10pF)±10%	-	-	±0.1	ppm	
	6.vs Aging	T_A=Room ambient	-	-	±1.0	ppm/year	
6	Start Up	@90% of final Vout level	-	-	2.0	ms	
7	SSB Phase Noise	Relative to F0 level offset 1Hz	-	-	57	dBc/Hz	
		Relative to F0 level offset 10Hz	-	-	-85	dBc/Hz	
		Relative to F0 level offset 100Hz	-	-	-110	dBc/Hz	
		Relative to F0 level offset 1kHz	-	-	-130	dBc/Hz	
		Relative to F0 level offset 10kHz	-	-	-140	dBc/Hz	

Notes
1. Clipped sine wave (DC-coupled)
2. Ref. to Nominal Frequency
3. Please leave after reflow in 2-hour or more at room ambient.
4. Ref. to Frequency (T_A=+25°C)
5. 1 Frequency reading for every 2°C
6. Ref. to Frequency (Before reflow)

8. Outline, Pin Connections

Outline

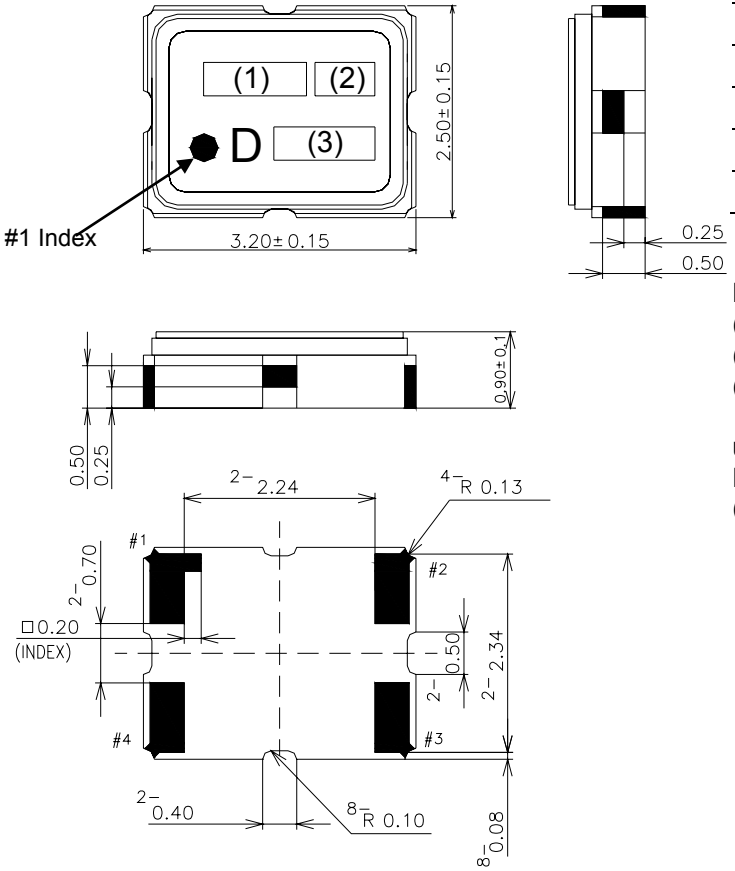

Pin Connections

Pin No.	Connection
#1	GND
#2	GND
#3	OUTPUT
#4	Vcc

Marking
(1) Frequency 16.36(MHz, 4digits)
(2) Model code T
(3) EIA Date code Year(1digit)+Week(2digits)
e.g. 2009/1/1 → 901

unit : mm
Dimensional Tolerance: ±0.15
(Unless otherwise noted)

9. Measurement Circuit

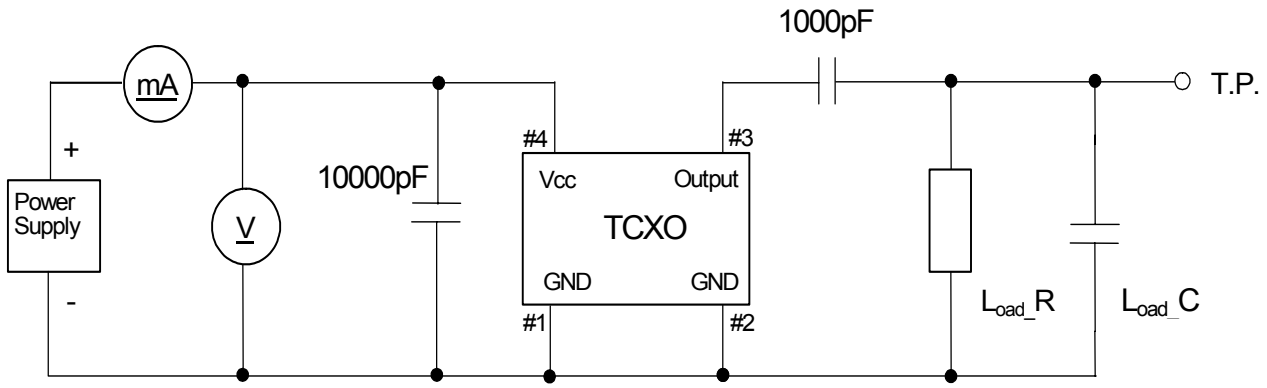

L_{oad}_R=10kΩ
L_{oad}_C=10pF (Include Jig stray capacitance)

TITLE	Remark		
TCXO PRELIMINARY SPECIFICATION			
Date	Spec. No.	Rev.	Page
2009/06/09	T09-0205(1XTW16367CFB)	-	2/2