1. Device Name VC-TCXO
2. Model Name DSA535SG
3. Nominal Frequency 19.440 MHz
4. Weight 0.08g max.
5. Absolute Maximum Value

	Item	Symbol	Rating	Unit
1	Supply Voltage	V_{CC}	-0.3 ~ +6.0	V
2	Storage Temperature Range	$T_{_STG}$	-40 ~ +85	°C

6. Recommended Operating Conditions

	Item	Symbol	min.	typ.	max.	Unit
1	Supply Voltage	V_{CC}	+3.135	+3.3	+3.465	V
2	Frequency Control Voltage Range	V_{CONT}	+0.5	+1.5	+2.5	V
3	Output Enable					
	1. "L" level	V_{IL}	–	–	V_{CC}x0.3	V
	2. "H" level	V_{IH}	V_{CC}x0.7	–	–	V
4	Operable Temperature Range	$T_{_OPR}$	-40	–	+85	°C
5	Load impedance (resistance part)	$L_{_CMOS}$	–	15	–	pF

7. Electrical Characteristics

(T_A =-40 ~ +85 °C, L_{CMOS} =15pF, V_{CC}=+3.3V, V_{CONT}=+1.5V, Output Enable="H"or "Open" unless otherwise noted)

	Item	Conditions	Limits			Unit	Notes
			min.	typ.	max.		
1	Current consumption		–	–	3.5	mA	
2	Output						1
	1. Rise Time	V_{CC}x0.1 ~ V_{CC}x0.9	–	–	7	ns	
	2. Fall Time	V_{CC}x0.9 ~ V_{CC}x0.1	–	–	7	ns	
	3. Low Level		–	–	V_{CC}x0.1	V	
	4. High Level		V_{CC}x0.9	–	–	V	
	5. Symmetry	V_{CC}x0.5 Level	40/60	50	60/40	%	
3	Frequency Stability						
	1.Tolerance	After 2 times reflow(T_A = +25 °C)	–	–	±1.50	ppm	2,3
	2.vs Temperature	T_A =-40 ~ +85 °C	–	–	±0.30	ppm	4
	3.vs Slope		–	–	±0.10	ppm	
	4.vs Supply Voltage	V_{CC}=+3.3V±5%	–	–	±0.10	ppm	
	5.vs Load Variation	L_{CMOS} =15pF ±5%	–	–	±0.10	ppm	
	6.vs Aging	T_A = Room ambient	–	–	±0.70	ppm/1years	
		T_A = Room ambient	–	–	±1.30	ppm/3years	
		T_A = Room ambient	–	–	±2.50	ppm/10years	
4	Start up time	@90% of Final Vout level	–	–	1.0	ms	
5	Frequency Control						
	1.Control Range	V_{CONT}=+1.5V ± 1.0V	±5.0	–	±9.0	ppm	5
	2.Input Resistance		100	–	–	kΩ	
6	SSB Phase Noise	Relative to F0 Level Offset 100Hz	–	–	-110	dBc/Hz	
		Relative to F0 Level Offset 1kHz	–	–	-135	dBc/Hz	6
		Relative to F0 Level Offset 10kHz	–	–	-150	dBc/Hz	

Notes

1. CMOS Output
2. Ref. to Nominal Frequency.
3. Please leave after Reflow in 2-hour or more at room ambient.
4. Ref. to Frequency(T_A=+25 °C)
5. Positive slope (Frequency becomes high in proportion to frequency control voltage.)
6. Standerd mode : without VC_FILTER (terminal #7 : N.C.)

8. Outline, Pin Connections, Land Pattern

Outline

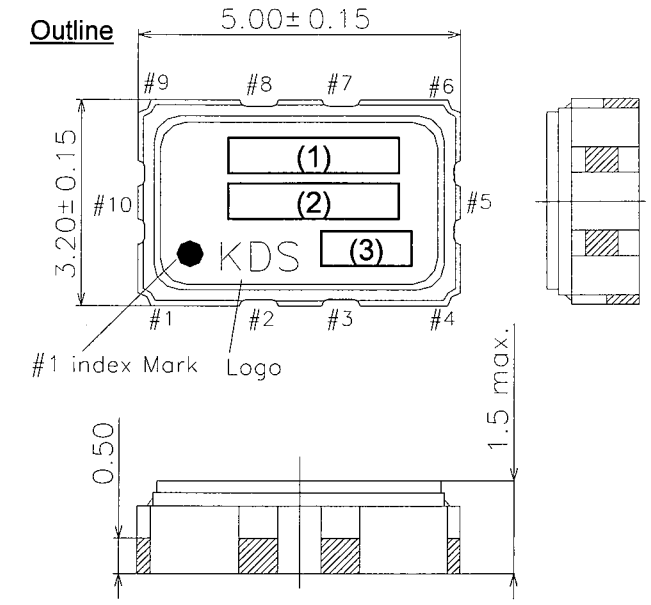

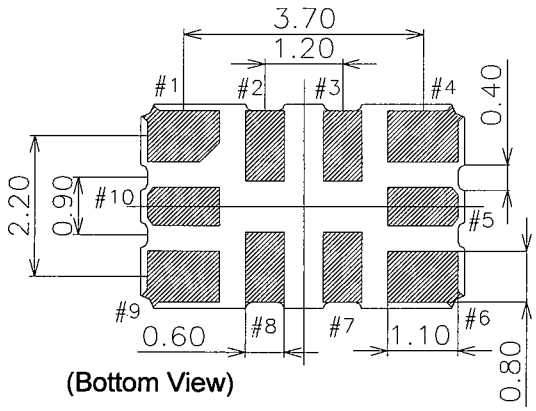

(Bottom View)

Pin Connections

Pin No.	Connection
#1	V_{CONT}
#2	GND (N.C.)
#3	Output Enable
#4	GND
#5	GND (N.C.)
#6	OUTPUT
#7	N.C.
#8	GND (N.C.)
#9	V_{CC}
#10	GND (N.C.)

Marking
(1) Frequency XXXXX(kHz, 5digits)
(2) Model code "A535SG"
(3) EIA Date code Year(1digit)+Week(2digits)
e.g. 2010/1/1 → 001

Unit:[mm]
Dimensional Tolerance:+/-0.15
(Unless otherwise noted)

Land Pattern (Example)

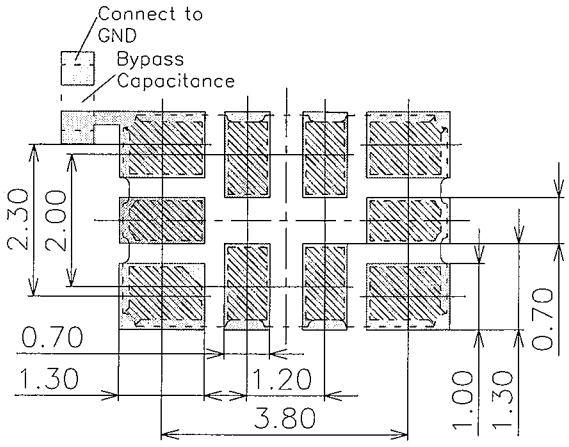

(Top View)

9. Measurement Circuit

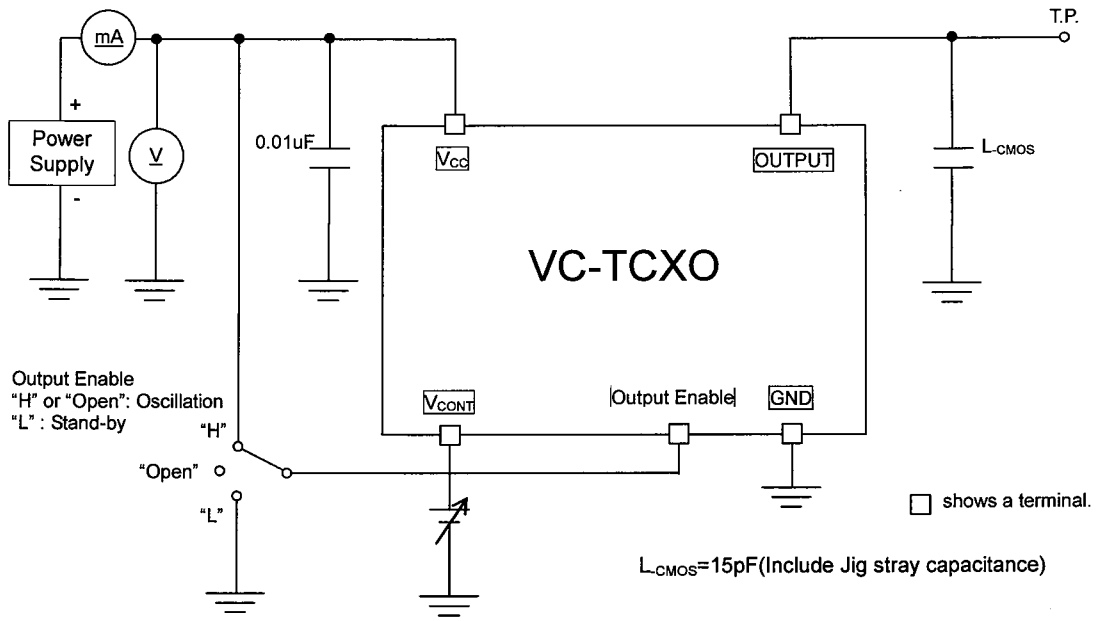

TITLE	Remark		
VC-TCXO SPECIFICATION			
Date	Spec. No.	Rev.	Page
2010/01/29	ZC05233		4/4

INSPECTION DATA

USER : Shanghai Winson Electronics
Type : DSA535SG
Freq. : 19.440 MHz

S.C.No. : ZC05233
Date : 2010.12.24

No.	Frequency	Frequency Stability							Frequency Control		Low Level	High Level	Rise Time	Fall Time	Symmetry	Current Consumption
		Tolerance Ref:Nominal Frequency	vs. Vcc Ref : Vcc=+3.3V		vs. Temperature Ref : +25℃				Vcont				10 ~ 90%Vdd		50%Vdd	
			+3.135V	+3.465V	-40℃	+0℃	+50℃	+85℃	+0.5V	+2.5V	V_{OL}	V_{OH}	Tr	Tf		
	[MHz]	[ppm]	[ppm]	[ppm]	[ppm]	[ppm]	[ppm]	[ppm]	[ppm]	[ppm]	[V]	[V]	[ns]	[ns]	[%]	[mA]
1	19.440003	+0.16	+0.03	-0.03	+0.11	+0.01	+0.02	+0.14	-6.86	+6.84	+0.04	+3.22	2.6	2.6	50.7	2.68
2	19.440002	+0.11	+0.02	-0.02	+0.12	+0.00	+0.09	+0.08	-6.95	+6.94	+0.04	+3.22	2.6	2.6	50.5	2.68
3	19.440000	+0.01	+0.03	-0.02	+0.16	+0.11	+0.03	-0.01	-6.58	+6.76	+0.04	+3.21	2.5	2.6	50.7	2.64
4	19.440003	+0.14	+0.02	-0.02	-0.03	+0.04	-0.02	+0.06	-6.88	+6.82	+0.04	+3.21	2.7	2.7	50.4	2.67
5	19.440000	+0.01	+0.02	-0.02	+0.11	+0.04	-0.07	-0.01	-6.93	+6.92	+0.04	+3.22	2.6	2.6	50.5	2.70
6	19.440001	+0.05	+0.03	-0.02	-0.23	+0.07	-0.10	-0.08	-7.40	+7.34	+0.05	+3.21	2.6	2.6	50.6	2.68
7	19.440001	+0.07	+0.03	-0.02	+0.02	-0.03	+0.01	+0.07	-7.10	+7.04	+0.03	+3.22	2.6	2.6	50.6	2.67
8	19.440001	+0.05	+0.03	-0.02	+0.10	+0.04	-0.84	+0.09	-7.43	+7.37	+0.05	+3.21	2.6	2.6	50.6	2.67
9	19.440001	+0.04	+0.02	-0.02	+0.07	+0.01	+0.03	+0.05	-6.89	+6.84	+0.04	+3.21	2.5	2.6	50.6	2.66
10	19.440001	+0.05	+0.03	-0.03	+0.10	+0.08	+0.12	+0.06	-6.81	+6.76	+0.04	+3.21	2.6	2.6	50.9	2.65

Remark : Ta=+25℃, Load=15pF, Vcc=+3.3V, Vcont=+1.5V, Output Enable="H" or "Open" unless otherwise noted.
Measurement Circuits : Refer to Spec sheets.

Equipment : Oscilloscope : Agilent MSO8104A
Probe : TEK P6243

Approve	Check	Test
M. Yamashita		S. Sakamoto

DAISHINKU CORP.