CRYSTAL SEPECIFICATION

Customer : _____

Customer P/N : _____

Part Name : 49S 16MHz 20pF 10PPM

Product Description : 49S 16MHz 20pF 10PPM

Issue Date : 2015.05.29

CUSTOMER'S APPROVAL

APPROVAL	CHECKED	CONFORM

(PLEASE RETURN A COPY WITH APPOVAL

Hubei TKD Electronic Technology Co.,LTD
湖北泰晶电子科技股份有限公司

APPROVED	DESIGNER
黄祥秒	代伟

SALE：TEL ：0722-3309660 FAX ：0722-3309768
QCD：TEL ：0722-3308231 FAX ：0722-3309768
FAE：TEL ：0755-27328651 FAX ：0755-27328001

REV.	Description of Revision History	Date	Designer	Checked By
A	New revision	2015-05-29	DaiWei	Huangx m

CRYSTAL SEPECIFICATION

1. Description: Quartz Crystal
2. Nominal Frequency: 16.000000MHz
3. Oscillation Mode: Fundamental
4. Cutting Mode: AT cut
5. Measurement Instrument: S&A 250B(Measured FL)
6. Electrical Characteristics:

[1]Operation Conditions:

Item	Symbol	MIN.	TYP.	MAX.	Unit	Condition
Operating Temperature Range	Topt	-20		75	℃	
Storage Temperature Range	Tstg	-40		85	℃	
Load Capacitance	CL		20		pF	
Drive Level	DL	0.1		100	uW	

[2]Frequency Stability:

Item	Symbol	MIN.	TYP.	MAX.	Unit	Condition
Tolerance	dF/Fo	-10		10	ppm	Refer to Center Frequency@25±3℃
Stability Over Temperature	dF/F25	-30		30	ppm	Refer to Operating Temperature
Aging	dF/F25	-5		5	ppm	Per Year

dF/Fo:Frequency Deviation Refer to Center Frequency

dF/F25:Frequency Deviation Refer to 25℃ Frequency

[3]Electrical Performance:

Item	Symbol	MIN.	TYP.	MAX.	Unit	Condition
Equivalent Series Resistance	ESR			70	Ω	@Series
Shunt Capacitance	C0			5	pF	
Insulation Resistance	IR	500			MΩ	@DC 100 Volt

7. Marking:Laser

16.000 :Nominal Frequency



8. Outline drawing (unit：mm)

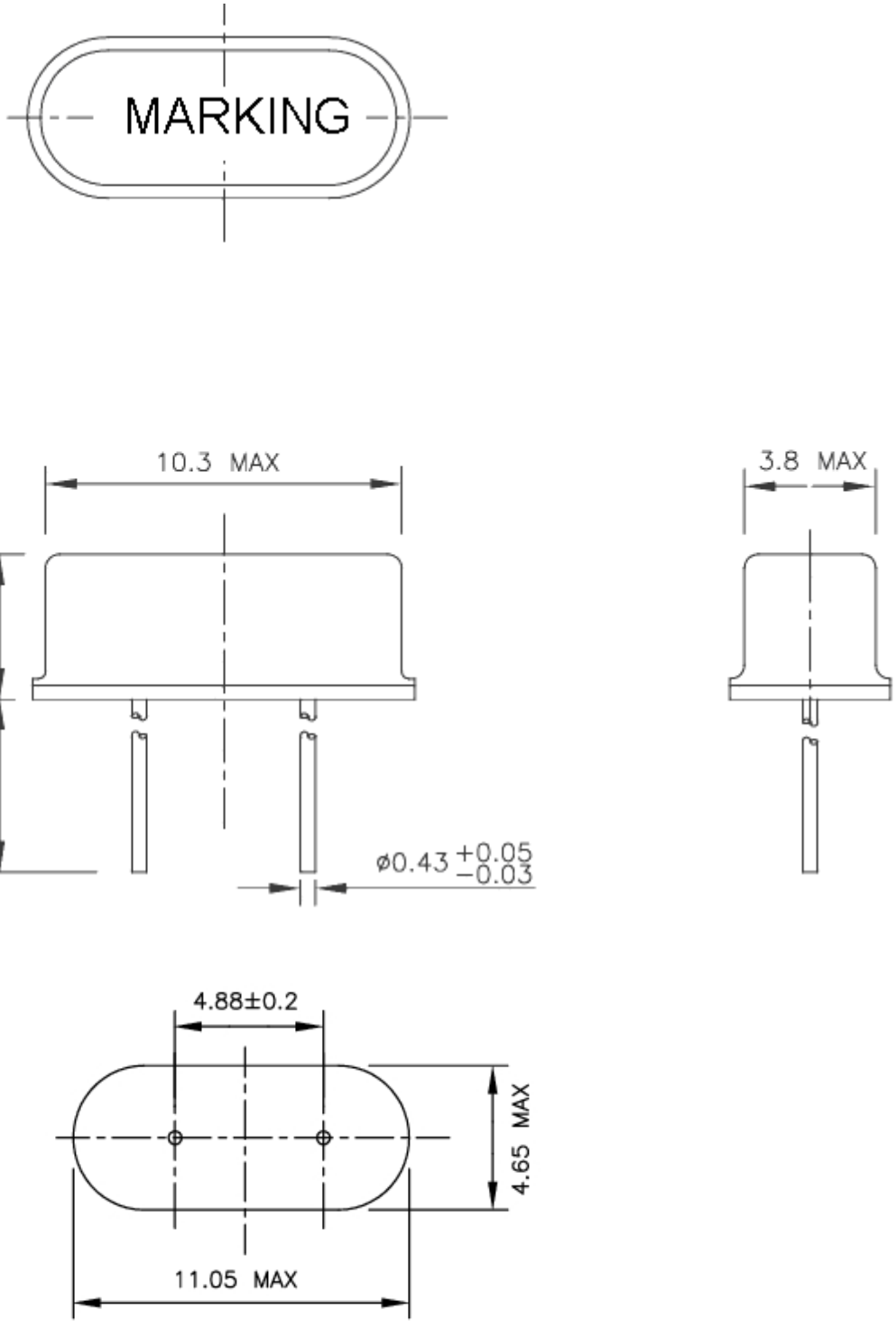

9. Reliability Specification

<table>
<tr><th>Test Item</th><th>Condition of test</th><th>Performance Requirements</th></tr>
<tr><td>Tensile Strength Termination</td><td>The unit's lead wire should withstand a tensile force applied to the termination in the direction of its draw-out axis of up to 1000g maintained as is for 10±2s</td><td>There should be no abnormalities detected on the unit</td></tr>
<tr><td>Solder ability</td><td>The lead is immersed in a 235±5℃ solder bath within 2±0.5 seconds.</td><td>A new uniform coating of solder shall cover min mun 95% of the surface being immersed.</td></tr>
<tr><td>Vibration</td><td>Endurance condition by a frequency sweep shall be made. The entire frequency range from 10HZ to 50HZ and return to 10HZ,shall be transverseb in 1min. Amplitude(total excursion):1.5mm this motion shall be applied for a period of 2h each of 3 mutually perpendicular axes(a total of 6h)</td><td>(1).Frequency Change:±5ppm
(2).Resistance:±15%</td></tr>
<tr><td>Drop</td><td>Form 70cm height 3 times on 3cm hard wooden floor</td><td>(1).Frequency Change:±5ppm
(2).Resistance:±15%</td></tr>
<tr><td>Shock</td><td>Peak acceleration:981m/s^2 duration of the pulse :6ms three successive shocks shall be applied in both direction of 3 mutually perpendicular axes(a total of 18 shocks)</td><td>(1).Frequency Change:±5ppm
(2).Resistance:±15%</td></tr>
<tr><td>Damp heat</td><td>The unit shall be stored at a temperature of 40±2℃with relative humidity of 90%to95% for 48h, then it shall be subjected to standard atmospheric conditions for 1 ～ 2h after which measurement shall be made.</td><td>(1).Frequency Change:±5ppm
(2).Resistance:±15%</td></tr>
<tr><td>Dry heat</td><td>The unit shall be stored at a temperature of 100℃±5℃ for 24h, then it shall be subjected to standard atmospheric conditions for 1～2h after which measurement shall be made.</td><td>(1).Frequency Change:±5ppm
(2).Resistance:±15%</td></tr>
<tr><td>Cold</td><td>The unit shall be stored at a temperature of-40℃±5℃ for 48h, then it shall be subjected to standard atmospheric conditions for 1～2h after which measurement shall be made.</td><td>(1).Frequency Change:±5ppm
(2).Resistance:±15%</td></tr>
<tr><td>Aging</td><td>The unit shall be stored at a temperature of 85℃±5℃ for 7d then it shall be subjected to standard atmospheric conditions for 1～2h after which measurement shall be made.</td><td>Refer to verdict specification</td></tr>
<tr><td>Temperature cycling</td><td>The unit shall be subjected to 5 successive change of temperature cycles, each as show in table below,then it shall be subjected to standard atmospheric conditions for 1 ～ 2h after which measurement shall be made
<table>
<tr><th></th><th>Temperature</th><th>Duration</th></tr>
<tr><td>1</td><td>-40℃±3℃</td><td>30min</td></tr>
<tr><td>2</td><td>Standard atmospheric conditions</td><td>Within 30s</td></tr>
<tr><td>3</td><td>100℃±3℃</td><td>30min</td></tr>
<tr><td>4</td><td>Standard atmospheric conditions</td><td>Within 30s</td></tr>
</table>
</td><td>Refer to verdict specification</td></tr>
</table>

Test Item	Condition of test	Performance Requirements
Sealing	The crystal filter unit shall be immersed in a industry alcohol for 5±0.5 minutes then 25±3℃ 1~2 Hr before testing	Insulation Resistance>500MΩ
Resistance to soldering heat	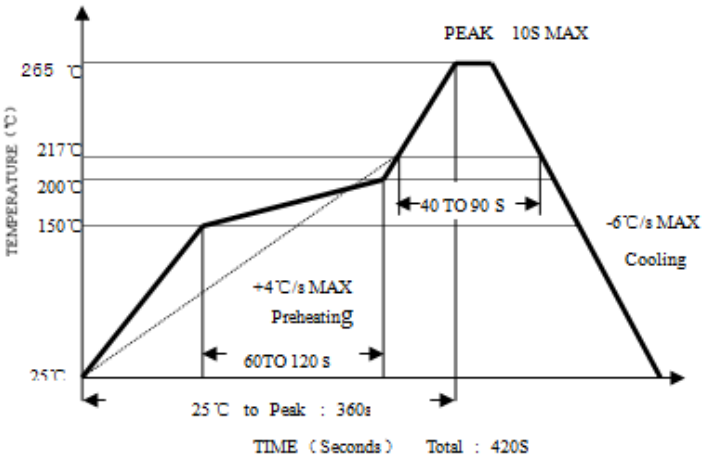 Reflow soldering cure see the chart. Soldering iron method: Bit temperature: 350℃±10℃ Application time of soldering iron:5s Max	Refer to verdict specification

10.1. inner box

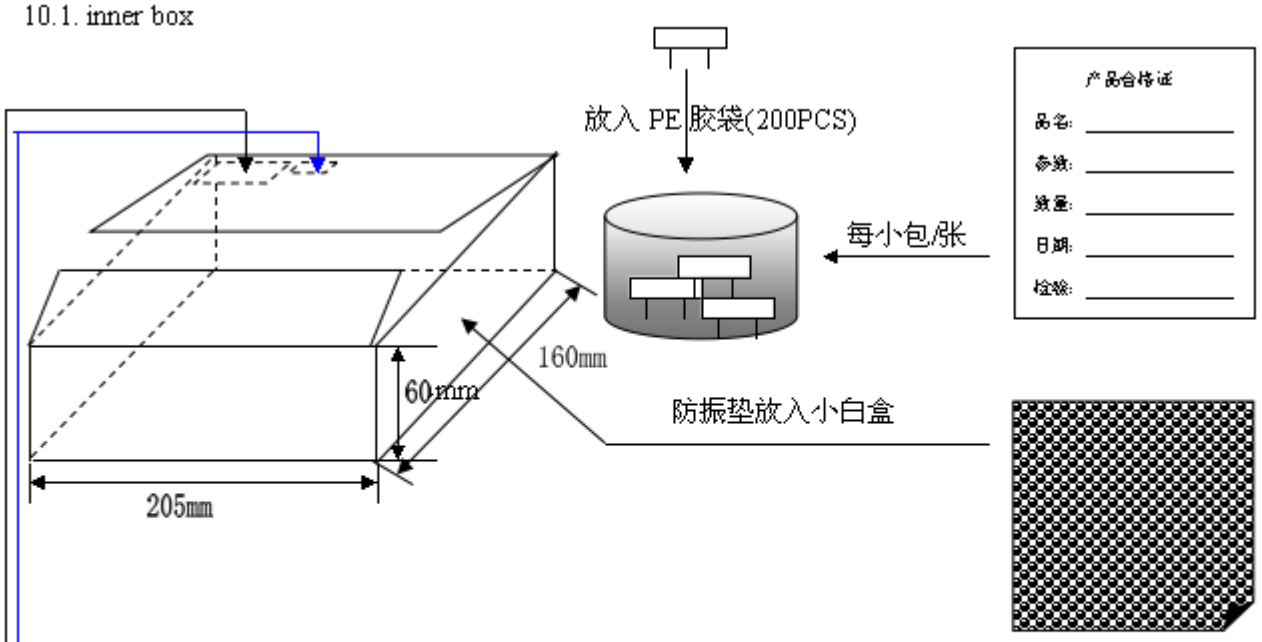

贴在小白盒盖上

ROHS

HUBEI TKD ELECTRONIS TECHNOLOGY CO.,LTD
采购单号：
物料编号：
品　　名：
产品参数：
数量/日期：___PCS　年 月 日

贴在小白左盖上

10.2. outer box

