TCXO SPECIFICATION

Customer：

Customer P/N：

TKD P/N： TC20A038400GECC007

Part Name： SMD VC-TCXO 2016

Product Description： 38.400000MHz

Issue Date： 2025/2/6

Product Standard： ☑Pb free ☑RoHS 2.0 ☑REACH ☑HF

CUSTOMER'S APPROVAL

(PLEASE RETURN A COPY WITH APPOVAL)

TKD Science and Technology Co.,Ltd
泰 晶 科 技 股 份 有 限 公 司

Approved	Checked	Designer
Zhan Chao	Wang ShuangXi	Zhang JingYuan

地址：湖北省随州市曾都经济开发区交通大道1131号

Address： 1131 jiaotong Avenue,Zengdu Economic Development Zone, Suizhou , Hubei

Sales Tel：0722-7509016，Fax：0722-7509036，URL：www.sztkd.com

Rev.	Description of Revision History	Date	Designer	Checked By
A	New Revision	2025/2/6	Zhang JingYuan	Wang ShuangXi

TCXO SPECIFICATION

1.Description : 2016 VC-TCXO

2.Nominal Frequency : 38.400000MHz

3.Electrical Specifications :

Item	Parameters		Condition	Electrical Specifications			
				Min	Typ	Max	Units
1	Nominal Frequency			38.400000			MHz
2	Frequency Stability	Vs.Temperature	（Note1）	-0.5		0.5	ppm
3		Vs.Load	±10%	-0.05		0.05	ppm
4		Vs.Supply Voltage	±0.05V	-0.05		0.05	ppm
5	Operating Temperature Range			-40		85	℃
6	Frequency Tolerance		（Note2）	-0.5		0.5	ppm
			（Note3）	-1.0		1.0	ppm
7	Supply Voltage			1.71	1.80	1.89	V
8	Current Consumption					2.0	mA
9	Output Level		（Note4）	0.8			Vp-p
10	Output Waveform			Clipped Sine			
11	Output Load			10kΩ //10pF			
12	Duty Cycle			40	50	60	%
13	Control Voltage Range			0.1	0.9	1.7	V
14	Frequency Control Range （refer：Vcon=0.9V）		Vcon=0.1V	-8		-3	ppm
			Vcon=1.7V	3		8	ppm
15	Input Impedance			500			kΩ
16	Aging		1st year@25±3℃	-1.0		1.0	ppm
17	Phase Noise		@10 Hz offset		-93		dBc/Hz
			@100 Hz offset		-118		dBc/Hz
			@1 kHz offset		-138		dBc/Hz
			@10 kHz offset		-149		dBc/Hz
			@100 kHz offset		-155		dBc/Hz
18	Start-up Time		To 90% of Vp-p			2.0	ms
19	Storage Temperature			-40		85	℃

Note1 Referenced to the midpoint between minimum and maximum frequency value

Note2 Refer to nominal frequency,test before shipping

Note3 After 2 times reflow,refer to frequency before reflow

Note4 DC-cut capacitor of output is not put in TCXO. Please add DC-cut capacitor (above 1nF) in output line

4.Test Circuit

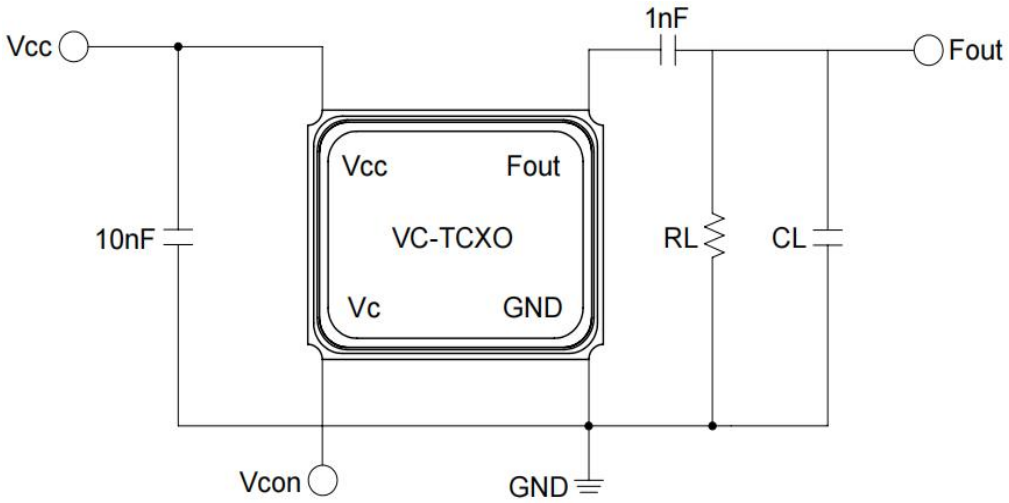

5.Recommended Reflow Profile

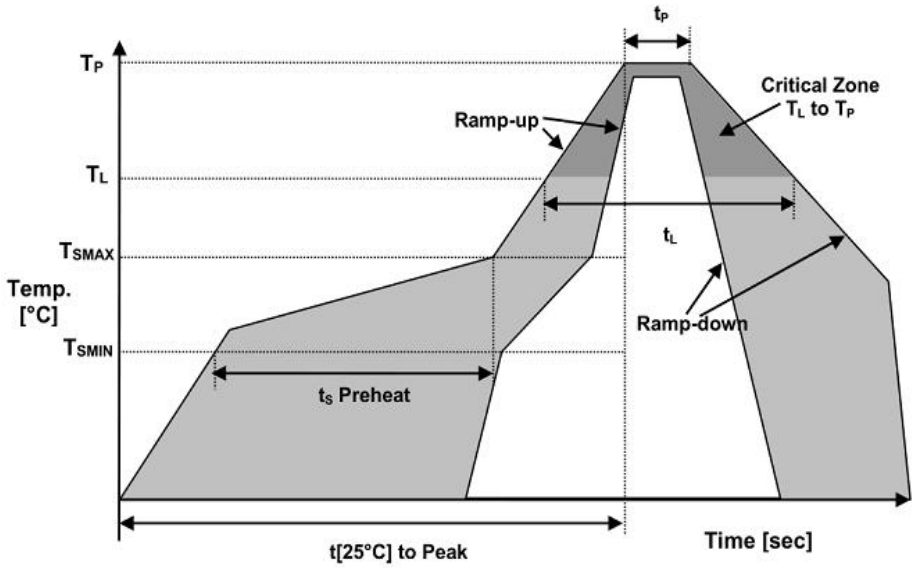

Reflow Profile		
Temperature MIN Preheat	T_{SMIN}	150℃
Temperature MAX Preheat	T_{SMAX}	200℃
Time（T_{SMIN}-T_{SMAX}）	t_S	60-180s
Temperature	T_L	217℃
Peak Temperature	T_P	260℃
Ramp-up Rate	R_{UP}	3℃/s max
Ramp-Down Rate	R_{DOWN}	6℃/s max
Time within 5℃ of Peak Temperature	t_P	10s
Time t（25℃）to Peak Temperature	t（25℃）to Peak	480s
Time	t_L	60-150s

6.Product Dimensions

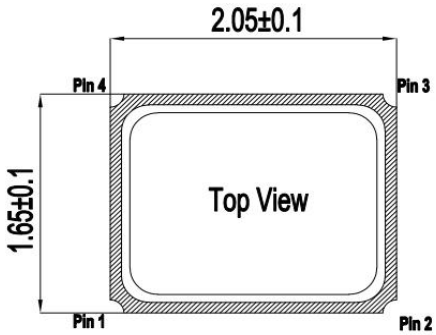

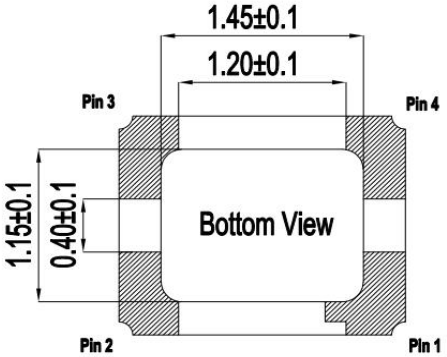

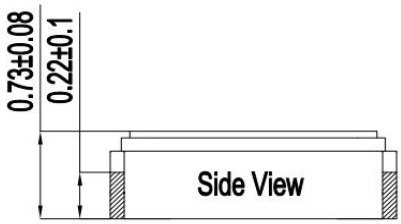

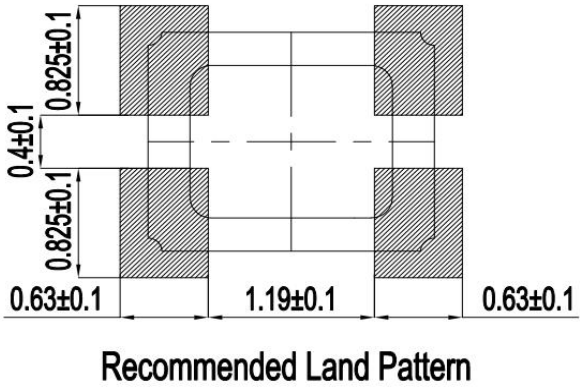

Pin Connection

Name	Connection
Pin 1	Vcon
Pin 2	GND
Pin 3	Fout
Pin 4	Vcc

7.Product Identification (Marking)

T： TKD Logo

384： Frequency Code

A： Frequency Discrimination Code

●： Pin1 Index

D： Date Code

####： TCXO Lot Code



Date Code

Year		2019	2020	2021	2022
		2023	2024	2025	2026
		2027	2028	2029	2030
		2031	2032	2033	2034
Month	JAN	a	n	A	N
	FEB	b	p	B	P
	MAR	c	q	C	Q
	APR	d	r	D	R
	MAY	e	s	E	S
	JUN	f	t	F	T
	JUL	g	u	G	U
	AUG	h	v	H	V
	SEP	j	w	J	W
	OCT	k	x	K	X
	NOV	l	y	L	Y
	DEC	m	z	M	Z

※This date code will be cycled every four years.

8.Structure Diagram

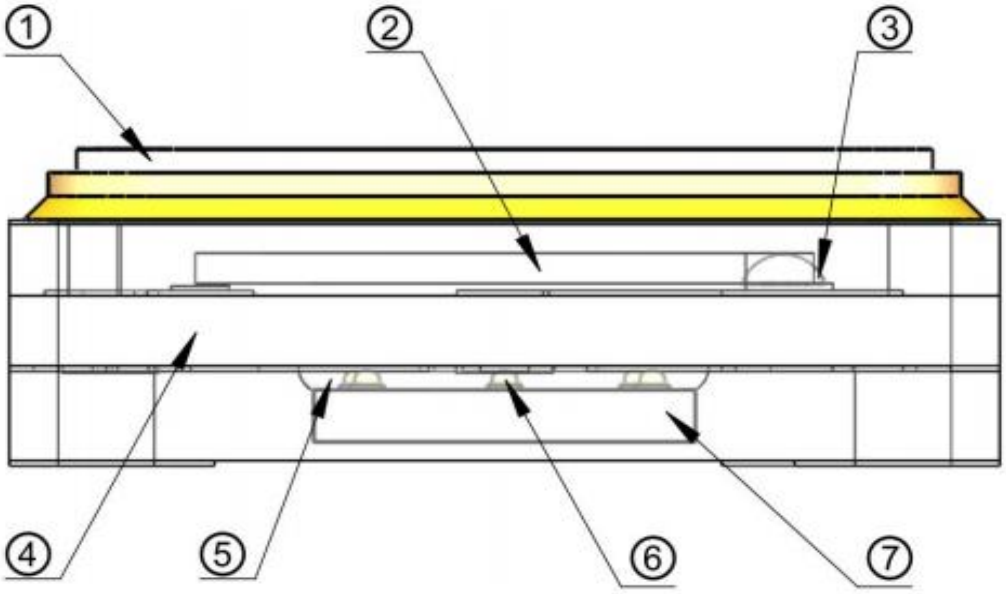

No.	Components	Materials
①	Lid	Fe-Ni-Co Alloy
②	Crystal Blank	SiO_2
③	Conductive Adhesive	Ag+Silicone resin
④	Base	Ceramic+Noble Metal
⑤	Underfill	Epoxy
⑥	Bump	Au
⑦	IC	Si

9.Reliability

No.	Item	Test Methods	Criteria
1	Low Temperature Storage	Temperature：-40℃ ± 3℃（or the specification shall prevail） Duration：500 hours	±5.0 ppm
2	High temperature and humidity	Temperature：85ºC ± 2ºC Humidity：RH 85% Duration：500 hours	±5.0 ppm
3	Thermal Shock	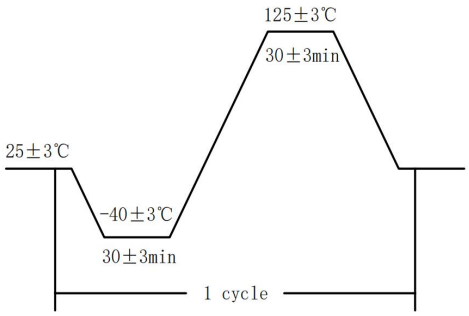 Temperature：-40℃~125℃（or the specification shall prevail） Duration：100 cycles	±5.0 ppm
4	High Temperature Operating Life	Temperature ： 85℃ （or the specification shall prevail） Duration：1000 hours Vdd Applied	±5.0 ppm
5	Vibration	Duration ： 2 hours/each direction Frequency range：10～55 Hz Direction：3 axis	±5.0 ppm
6	Mechanical Shock	Acceleration：100 g Duration：6.0 ms Test cycles：3 times for all 6 axis，half sina	±5.0 ppm
7	Drop Test	Height：100 cm Test cycles：3 times	±5.0 ppm
8	Solderability	Soldering bath temperature：245℃ ± 5℃ Duration：2±0.6 second	95% Coated
9	Resistance to Soldering Heat	Soldering temperature：260℃ ± 10℃ Duration：15±5 second	±5.0 ppm
10	Board Flex	Height：3.0 mm Duration：5 second Speed：0.5mm/sec 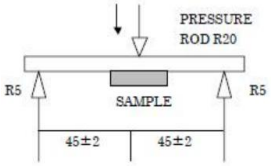	±5.0 ppm

10.Package Information

Tape（Carrier）Dimensions

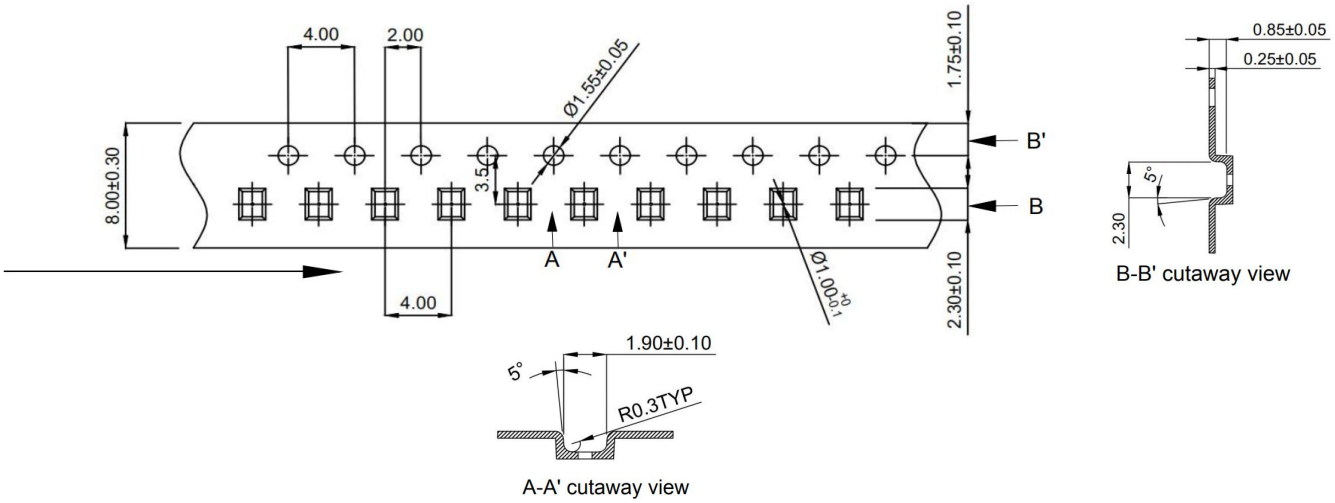

The Direction of Packing

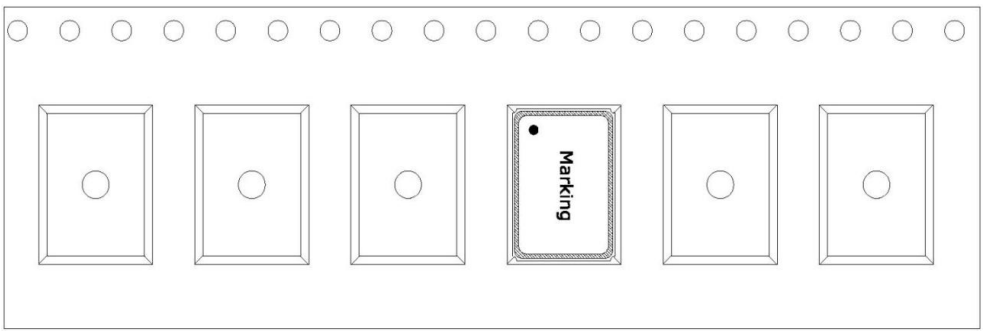

Reel Dimensions 3000 Pcs/Reel

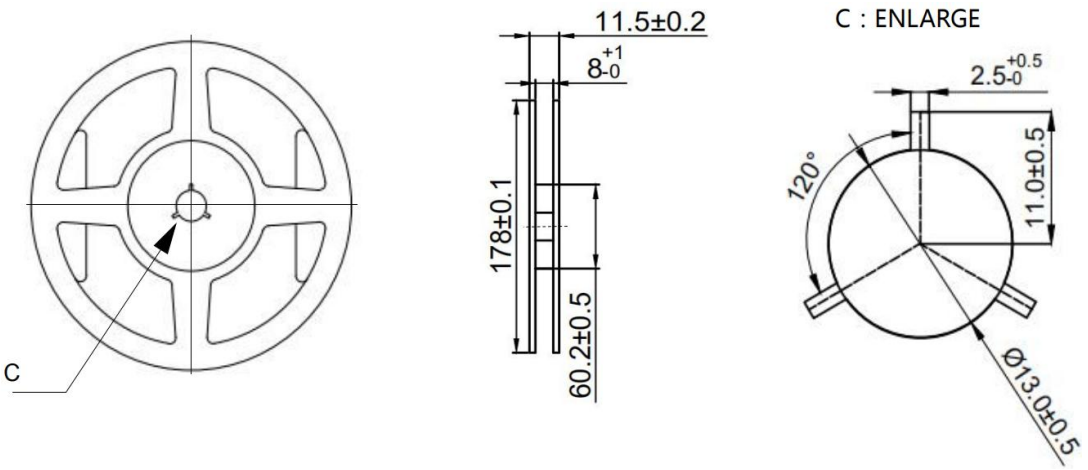

Handling Instructions

1. Cautions for Handling

a) Prevention against electrostatic breakdown

Your full attention to static electricity is still requested.

b) Direction

Before mounting the crystal oscillator on board, Please confirm the direction to make sure the GND terminal and the terminal of power supply are not taken wrongly.

2. Prevention against Vibration and Shock

While the product is being transported or mounted onto board, if undue hock and vibration exceeding the specification is put on, there is risk hat the built-in crystal blank is broken.

When undue shock and vibration exceeding the specification is put on the product,please be sure to make confirmation of the product's characteristics.

3. Soldering

In order to assure the reliability of the crystal oscillator, please use the product under the recommended conditions.

4. Surface mounting

a)This product is surface-mounting device.

So, Please pay attention to the following things.

b)Extreme deformation of board may make pattern off, the electrode of terminals off and solder broken.Full attention is requested especially when splitting the board with the oscillator mounted where the camber of the board occurs.

c)In case that automatic mounter is used, please choose the type with small shock generation and make confirmation of the shock before use.

5. Cleaning

Because cleaning will cause change to all characteristics, cleaning is forbidden.

6. Store keeping (method and duration)

Long-time storage in the high/low temperature and high humidity leads to deterioration of solderability. So, please keep the product in the temperature of +5~+35 and humidity of 45~70%. Moreover, please keep the product in the circumstance with measures against static electricity. The storage life is 6 months before the pack is opened and please use it within 168 hours after the pack is opened.

(Please keep it with desiccator etc. when you exceed 168 hours after the bag is opened. Please use it after confirming the product solderability.)

7. Caution

This product should not be used in toxic, harmful, or corrosive environments such as mercury, chlorine, sulfur, acid-base environments etc.

8.Application scenarios

TKD products are designed specifically for general and specific electronic applications. Without confirmation, they should not be used in critical areas beyond expectations, such as space technology, vehicle control, military weapon development, etc., to avoid significant risks to safety, health, property, or society. For intended use only, there is no additional guarantee for specific use products. If you need products for specific purposes, please consult TKD sales representatives in advance.