Specifications

Drawing No.	UKY1C-H1-17A03-00[43] 1/10
Issued Date.	Oct,17,2017

TO: KCST

Note: In case of specification change, KYOCERA Part Number also will be changed.

Product Name	Quartz Crystal
Product Model	CX3225SB
Frequency	20000kHz
Customer Part Number	-
Customer Specification Number	-
KYOCERA Part Number	CX3225SB20000D0FSSC1
Remarks	Pb-Free、RoHS Compliant、MSL 1 AEC-Q200 Compliant

Customer Acceptance

Accept Signature	Approved Date	
	Department	
	Person in charge	

Seller
KYOCERA Corporation
Corporate Electronic Components Group
Electronic Components Sales Division
6 Takeda Tobadono-cho, Fushimi-ku, Kyoto
612-8501 Japan
TEL. No. 075-604-3500
FAX. No. 075-604-3501

Manufacturer

Corporate Electronic Components Group
Crystal Components Division

DesignDepartment	QualityAssurance	Approved by	Checked by	Issued by
KYOCERACorporation Crystal Units Design Engineering Yamagata Section Crystal Product Division	W. Muraoka	Y. Takahashi	T. Nitoube	Y. Kikuchi

Revision History

Rev.No.	Description of revise	Date	Approved by	Checked by	Issued by
1	First Edition	Oct,17,2017	Y. Takahashi	T. Nitoube	Y. Kikuchi

1. APPLICATION

This specification sheet is applied to quartz crystal "CX3225SB20000D0FSSC1"

2. KYOCERA PART NUMBER

CX3225SB20000D0FSSC1

3. RATINGS

Items	SYMB.	Rating	Unit	Remarks
Operating Temperature	Topr	-40 to +125	°C	
Storage Temperature range	Tstg	-40 to +125	°C	

4. CHARACTERISTICS

ELECTRICAL CHARACTERISTICS

Items	Electrical Specification					Test Condition	Remarks
	SYMB.	Min	Typ.	Max	Unit		
Mode of Vibration			Fundamental				
Nominal Frequency	F0		20		MHz		
Nominal Temperature	T_{NOM}		+25		°C		
Load Capacitance	CL		8.0		pF		
Frequency Tolerance	df/F	-10.0		+10.0	PPM	+25±3°C	
Frequency Temperature characteristics	df/F	-50.0		+50.0		-40 to +125°C	
FrequencyAging Rate		-1.0		+1.0		1st year	+25±3°C
Equivalent Series Resistance	ESR			50	Ω		
Drive Level	Pd	0.01		100	μW		
Insulation Resistance	IR	500			MΩ	100V(DC)	

5. Measurement Condition

5.1 Frequency measurement

Measuring instrument	: IEC PI-Network Test Fixture
Load Capacitance	: 8.0pF
Drive Level	: 10μW

5.2 Equivalent series resistance (ESR) measurement

Measuring instrument	: IEC PI-Network Test Fixture
Load Capacitance	: Series
Drive Level	: 10μW

6. APPEARANCES, PHYSICAL DIMENSION

OUTLINE DIMENSION (not to scale)

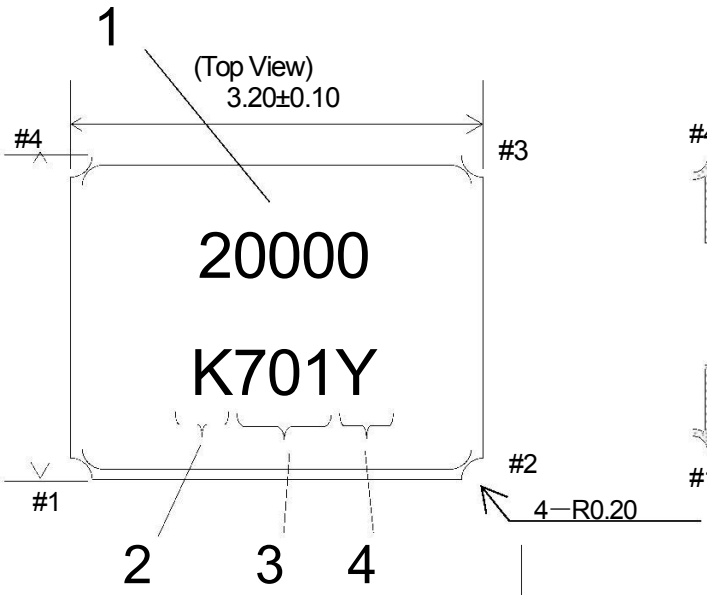

（**TOP VIEW**）

(Connection)

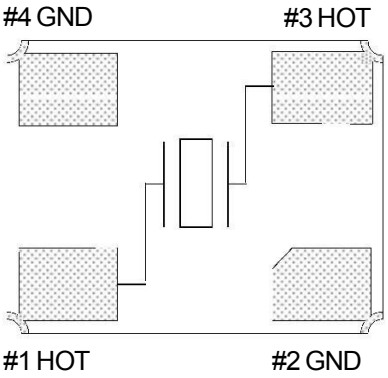

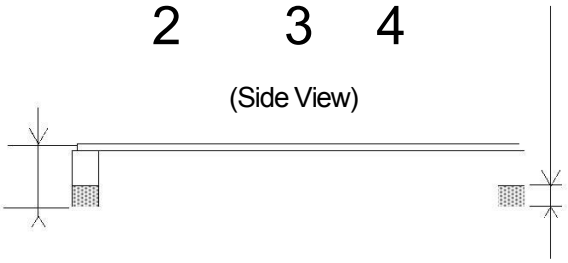

PIN NO.	PIN Layout
#1	HOT
#2	GND
#3	HOT
#4	GND

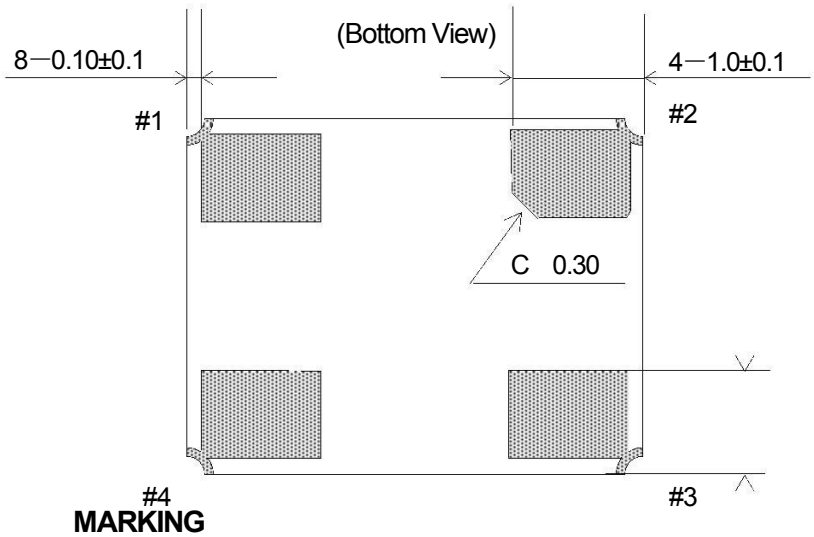

UNIT： mm

MARKING

1 Nominal Frequency Move the number of maximum indication beams of the frequency to five digits，and omit less than kHz.

2 Identification [K] mark is surely 1Pin direction.

3 Date Code Year…LAST 1 DIGIT of YEAR AND WEEK
(Ex)Jan, 01, 2017 → 701

4 Manufacturing Location
Y…Japan(Yamagata)
Z…Japan(Shiga Yohkaichi)
T…Thailand

※**The font of marking is reference.**

KYOCERA Corporation

7. RECOMMENDED LAND PATTERN (not to scale)

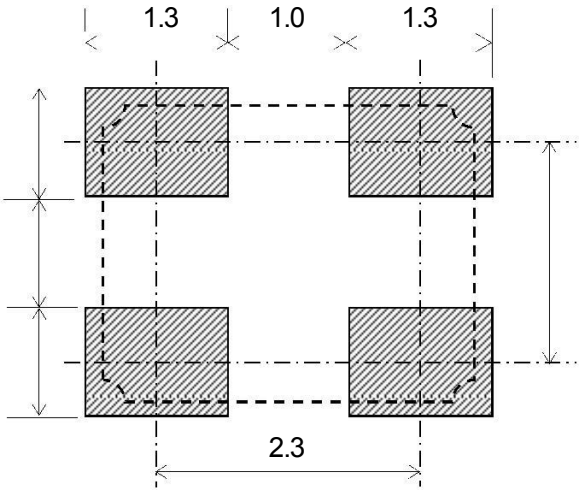

UNIT： mm

8.TAPING & REEL

8-1.Dimensions

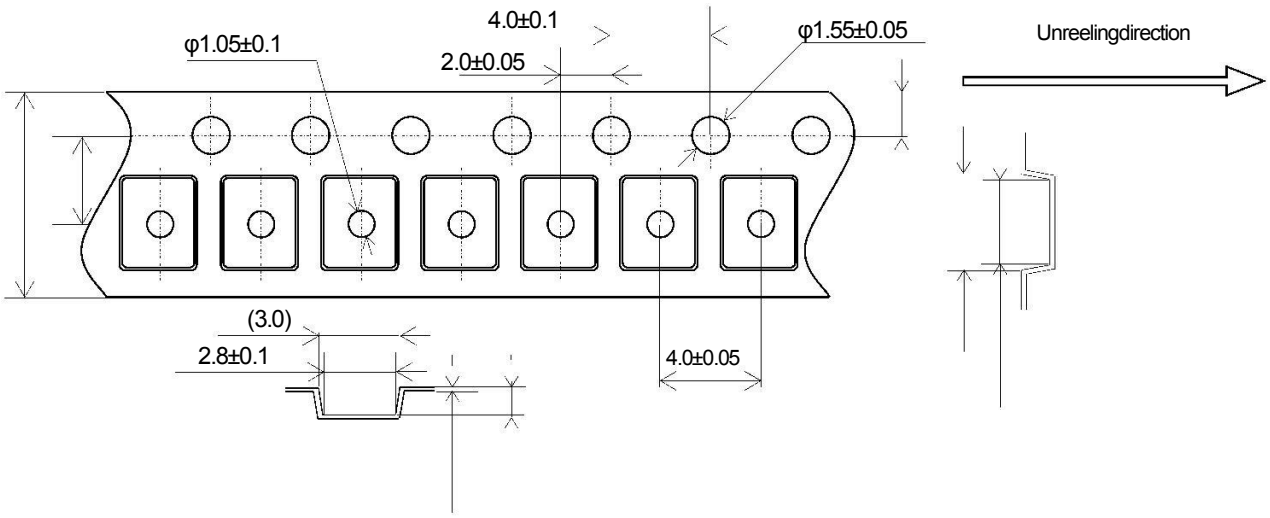

8-2.Leader and trailer tape

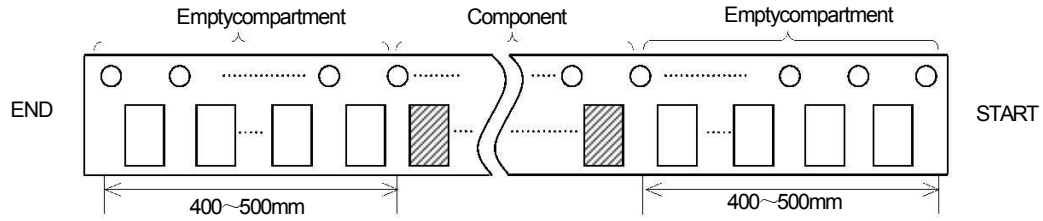

8-3.Direction（The direction shall be seen from the top cover tape side）

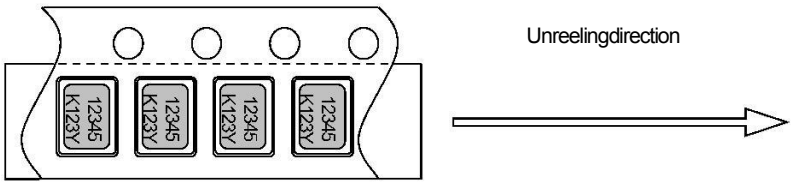

8-4.Specification

1. Material of the carrier tape is either polystyrene or A—PET (ESD).
2. Material of the cover tape is polyester (ESD).
3. The seal tape shall not cover the sprocket holes and not protrude from the carrier tape.
4. Tensile strength of carrier tape: 10N or more.
5. The R of the corner of each cavity is 0.2RMAX.
6. The alignment between centers of the cavity and sprocket hole shall be 0.05mm or less.
7. The orientation shall be checked from the top cover tape side as shown in 8-3.
8. Peeling force of cover tape: 0.1 to 1.0N.
9. The component will fall out naturally when cover tape is removed and set upside down.

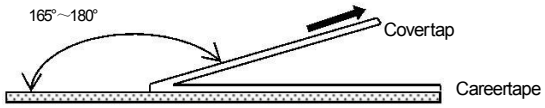

8-5.ReelSpecification

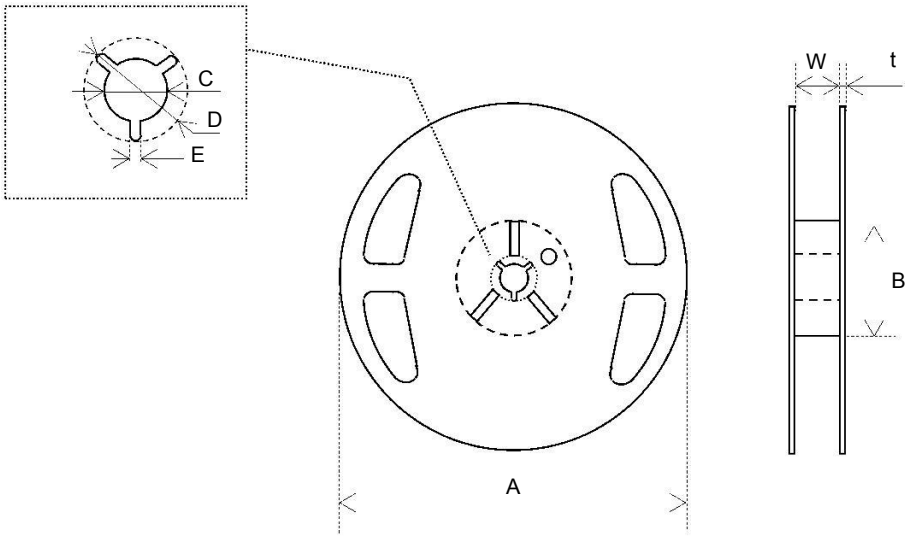

φ180 Reel (3,000pcs Max.)

Symbol	A	B	C	D
Dimension	φ180 +0/-3	φ60 +1/-0	φ13±0.2	φ21±0.8
Symbol	E	W	t	
Dimension	2.0±0.5	9±1	2.0±0.5	

(Unit : mm)

φ330 Reel (10,000pcs Max.)

Symbol	A	B	C	D
Dimension	φ330±2.0	φ100±1.0	φ13±0.2	φ21±0.8
Symbol	E	W	t	
Dimension	2.0±0.5	9.5±0.5	2.2±0.1	

(Unit : mm)

9.ENVIRONMENTAL AND MECHANICAL CHARACTERISTICS :

(Reference: AEC-Q200 Rev. D. The solder used by examination is hereafter set to Sn-3Ag-0.5Cu.)
After following test, Frequency applies to each item and CI, ±20% or 5Ω of large value.

No	Stress	Reference	Additional Requirements
9.1	High Temperature Exposure (Storage)	MIL-STD-202 Method 108	1000 hrs. at rated operating temperature (e.g. 85°C part can be stored for 1000 hrs at 85°C. Same applies for 125°C). Unpowered. Measurement at 24±4 hours after test conclusion.
9.2	Temperature Cycling	JESD22 Method JA-104	1000 cycles (-40°C to 125°C) Note: If 85°C part the 1000 cycles will be at that temperature rating. Measurement at 24±4 hours after test conclusion. 30min maximum dwell time at each temperature extreme. 1 min. maximum transition time.
9.3	Biased Humidity	MIL-STD- 202 Method 103	1000 hours 85°C/85%RH. Rated VDD applied with 1 MW and inverter in parallel, 2X crystal CL capacitors between each crystal leg and GND. Measurement at 24±4 hours after test conclusion.
9.4	Operational Life	MIL-STD- 202 Method 108	Note: 1000 hrs @ 125°C. If 85°C part will be tested at that temperature. Rated VDD applied with 1 MW and inverter in parallel, 2X crystal CL capacitors between each crystal leg and GND. Measurement at 24±4 hours after test conclusion.
9.5	Terminal Strength (Leaded)	MIL-STD- 202 Method 211	Test leaded device lead integrity only. Conditions:A (227 g), C (227 g).
9.6	Resistance to Solvents	MIL-STD- 202 Method 215	Note: Also aqueous wash chemical - OKEM clean or equivalent. Do not use banned solvents.
9.7	Mechanical Shock	MIL-STD-202 Method 213	Figure 1 of Method 213. Condition C
9.8	Vibration	MIL-STD-202 Method 204	5g's for 20 minutes 12 cycles each of 3 orientations. Note: Use 8"X5" PCB .031" thick with 7 secure points on one 8" side and 2 secure points on corners of opposite sides. Parts mounted within 2" from any secure point. Test from 10-2000 Hz.
9.9	Resistance to Soldering Heat	MIL-STD-202 Method 210	Condition B No pre-heat of samples. Note: Single Wave solder - Procedure 1 with solder within 1.5 mm of device body for Leaded. Procedure 1 except 230°C and immerse only to level to cover terminals for SMD.
9.10	Solder ability	J-STD-002	For both Leaded & SMD. Electrical Test not required. Magnification 50 X. Conditions: Leaded: Method A @ 235°C, category 3. SMD: a) Method B, 4 hrs @ 155°C dry heat @ 235°C b) Method B @ 215°C category 3. c) Method D category 3 @ 260°C.
9.11	Flammability	UL-94	V-0 or V-1 Acceptable
9.12	Board Flex	AEC Q200-005	60 sec minimum holding time.
9.13	Terminal Strength(SMD)	AEC Q200-006	-

10. Cautions for use

（1）Soldering upon mounting

There is a possibility to influence product characteristics when Solder paste or conductive glue comes in contact with product lid or surface.

（2）When using mounting machine

Please minimize the shock when using mounting machine to avoid any excess stress to the product.

（3）Conformity of a circuit

We strongly recommend to make sure that Negative resistance (Gain) of IC is designed to be 10 times the ESR (Equivalent Series Resistance) of crystal unit.

11. Storage conditions

Please store product in below conditions, and use within 6 months.
Temperature +18 to +30°C, and Humidity of 20 to 70% in the packaging condition.

12. Manufacturing location

Kyocera Corporation Yamagata Higashine Plant / Japan(Yamagata)
Kyocera Corporation Shiga Yohkaichi Plant / Japan(Shiga)
Kyocera Crystal Device (Thailand) Co., Ltd / Thailand(Lamphun)

13. Quality Assurance

To be guaranteed by Kyocera Corporation Yamagata Higashine Plant QualityAssurance Division

14. Quality guarantee

In case when Kyocera Corporation rooted failure occurred within 1year after its delivery, substitute product will be arranged based on discussion. Quality guarantee of product after 1year of its delivery is waivered.

15. Others

In case of any questions or opinions regarding the Specification, please have it in written manner within 45 days after issued date.