1. Device Name VC-TCXO
2. Model Name DSA535SC
3. Nominal Frequency 19.200 MHz
4. Mass 0.08g max.

5. Absolute Maximum Ratings

	Item	Symbol	Rating	unit
1	Supply Voltage	V_{CC}	-0.3~+6.0	V
2	Storage Temperature Range	$T_{_STG}$	-40~+85	°C

6. Recommended Operating Conditions

	Item	Symbol	min.	typ.	max.	unit
1	Supply Voltage	V_{CC}	+3.135	+3.3	+3.465	V
2	Load Impedance (resistance part)	L_{OAD}_R	9	10	11	kΩ
	(parallel capacitance)	L_{OAD}_C	9	10	11	pF
3	Control Voltage Range	V_{CONT}	+0.5	+1.5	+2.5	V
4	Operating Temperature Range	$T_{_OPR}$	-30	-	+85	°C

7. Electrical Characteristics

(T_A=-30~+85°C, L_{OAD}_R//C=10kΩ//10pF, V_{CC}=+3.3V, V_{CONT}=+1.5V, unless otherwise noted)

	Item	Conditions	Limits			unit	Notes
			min.	typ	max.		
1	Current Consumption		-	-	+1.3	mA	
2	Output Level		0.8	-	-	V_{P-P}	1
3	Symmetry	GND level (DC cut)	40/60	-	60/40	%	
4	Harmonics		-	-	-10	dBc	
5	Frequency Stability						
	1.Tolerance	After 2 times reflow Ref. to nominal frequency	-	-	±1.5	ppm	2,3
	2.vs Temperature	T_A=-30~+85°C Ref. to frequency (T_A=+25°C)	-	-	±2.0	ppm	
	3.vs Supply Voltage	V_{CC}=+3.3V±5%	-	-	±0.2	ppm	
	4.vs Load Variation	L_{OAD}_R//C=(10kΩ//10pF)±10%	-	-	±0.2	ppm	
	5.vs Aging	T_A=Room ambient	-	-	±1.0	ppm/year	
6	Start Up Time	@90% of final Vout level	-	-	2.0	ms	
7	Frequency Control						
	1.Control Range	V_{CONT}=+1.5V±1.0V	±9	-	±15	ppm	4
	2.Input Resistance		500	-	-	kΩ	
8	SSB Phase Noise	Relative to f0 level offset 1kHz	-	-	-125	dBc/Hz	

Notes
1. Clipped sine wave (DC-coupled)
2. T_A=+25°C
3. Please leave after reflow in 2h or more at room ambient.
4. Positive slope (Frequency becomes high in proportion to frequency control voltage.)

TITLE	Remark		
DSA535SC TYPE SPECIFICATION			
Date	Spec. No.	Rev.	Page
2015/08/20	ZC10326	-	1/2

8. Outline, Pin Connections

Outline

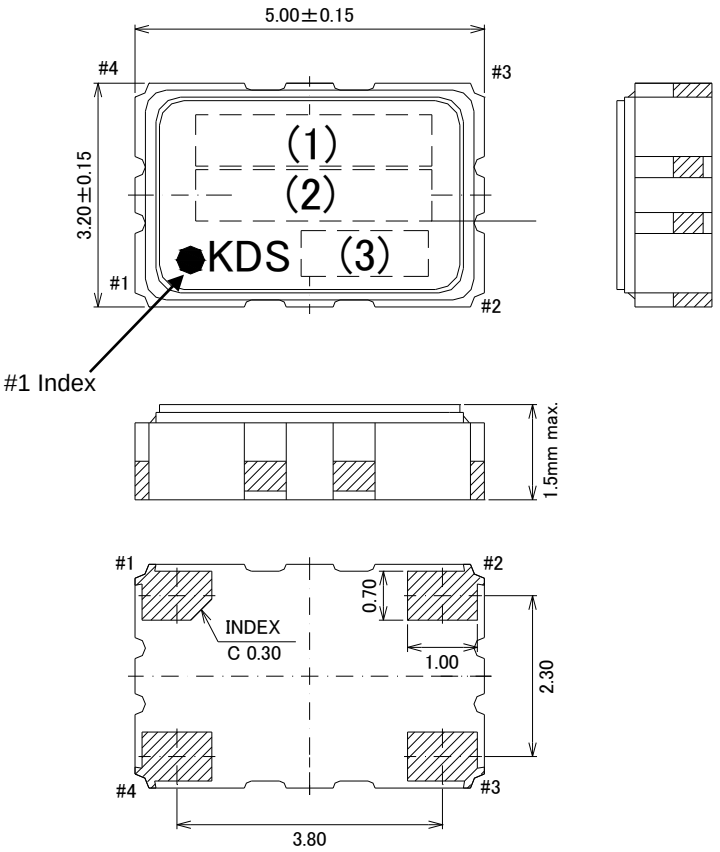

Pin Connections

Pin No.	Connection
#1	V_{CONT}
#2	GND
#3	Output
#4	V_{CC}

Marking

(1) Frequency	19200 (kHz, 5digits)
(2) Model code	A535SC
(3) Date code	Year (1digit) +Week (2digits) e.g.2015/1/1 → 501

unit: mm
Dimensional Tolerance: ±0.15
(Unless otherwise noted)

9. Measurement Circuit

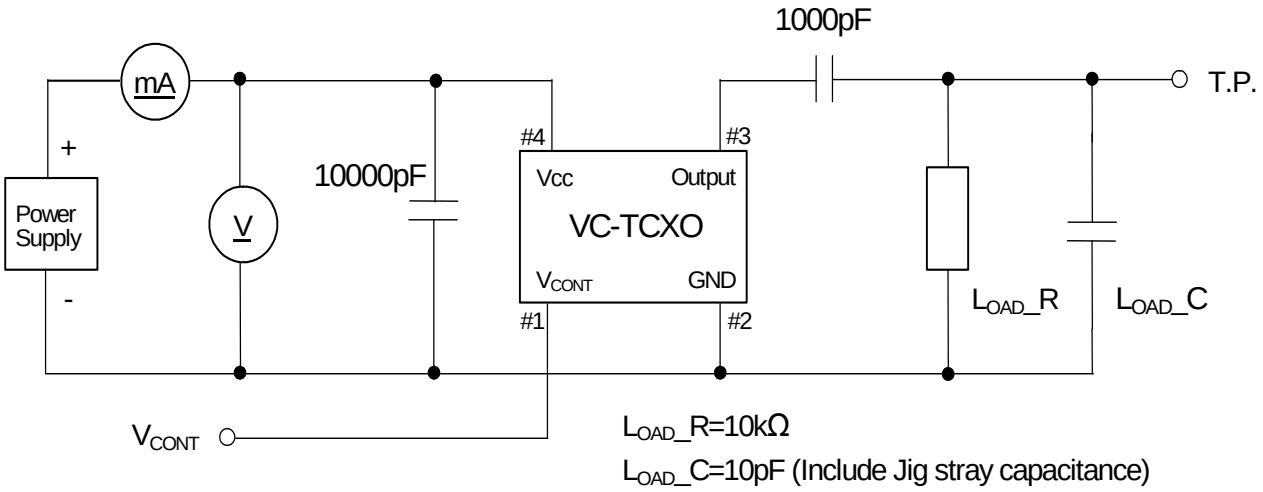

TITLE	Remark		
DSA535SC TYPE SPECIFICATION			
Date	Spec. No.	Rev.	Page
2015/08/20	ZC10326	-	2/2