1. Device Name TCXO
2. Model Name DSA211SDN
3. Nominal Frequency 52.000 MHz
4. Mass 0.015g max.

5. Absolute Maximum Ratings

	Item	Symbol	Rating	unit
1	Supply Voltage	V_{CC}	-0.3~+4.6	V
2	Storage Temperature Range	$T_{_STG}$	-40~+85	°C

6. Recommended Operating Conditions

	Item	Symbol	min.	typ.	max.	unit
1	Supply Voltage	V_{CC}	+1.71	+1.8	+1.89	V
2	Load Impedance (resistance part)	L_{OAD}_R	9	10	11	kΩ
	(parallel capacitance)	L_{OAD}_C	9	10	11	pF
3	Control Voltage Range	V_{CONT}	+0.3	+0.9	+1.5	V
4	Operating Temperature Range	$T_{_OPR}$	-40	-	+85	°C

7. Electrical Characteristics

(T_A=-40~+85°C, L_{OAD}_R//C=10kΩ//10pF, V_{CC}=+1.8V, V_{CONT}=+0.9V, unless otherwise noted)

	Item	Conditions	Limits			unit	Notes
			min.	typ.	max.		
1	Current Consumption		-	-	+2.0	mA	
2	Output Level		0.9	-	1.2	V_{P-P}	1
3	Symmetry	GND level (DC cut)	40/60	-	60/40	%	
4	Harmonics		-	-	-5	dBc	
5	Frequency Stability						
	1.Tolerance	After 2 times reflow Ref. to nominal frequency	-	-	±1.5	ppm	2,3
	2.vs Temperature	T_A=-40~+85°C Ref. to frequency (T_A=+25°C)	-	-	±2.0	ppm	
	3.vs Supply Voltage	V_{CC}=+1.8V±5%	-	-	±0.2	ppm	
	4.vs Load Variation	L_{OAD}_R//C=(10kΩ//10pF)±10%	-	-	±0.2	ppm	
	5.vs Aging	T_A=Room ambient	-	-	±1.0	ppm/year	
6	Start Up Time	@90% of final Vout level	-	-	2.0	ms	
7	Frequency Control						
	1.Control Range	V_{CONT}=+0.9V±0.6V	±12	-	±15	ppm	4
	2.Input Resistance		500	-	-	kΩ	
8	SSB Phase Noise	Relative to f0 level offset 1kHz	-	-	-125	dBc/Hz	

Notes
1. Clipped sine wave (DC-coupled)
2. T_A=+25°C
3. Please leave after reflow in 2h or more at room ambient.
4. Positive slope (Frequency becomes high in proportion to frequency control voltage.)

8. Outline, Pin Connections

Outline

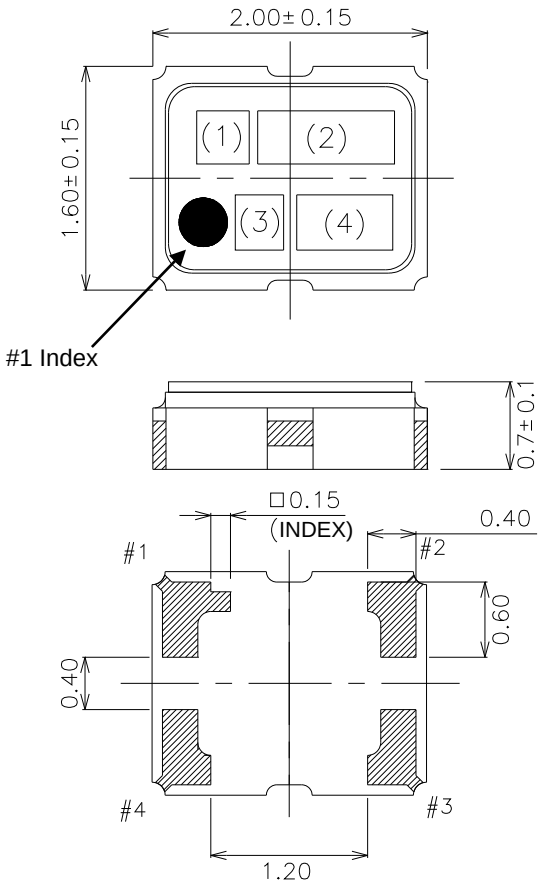

Pin Connections

Pin No.	Connection
#1	Vcont
#2	GND
#3	Output
#4	V_{CC}

Marking

(1) Model code	AN
(2) Frequency	52.0 (MHz, 3digits)
(3) Logo	D
(4) Date code	Year (1digit) +Week (2digits) e.g.2017/1/1 → 701

unit: mm
Dimensional Tolerance: ±0.1
(Unless otherwise noted)

9. Measurement Circuit

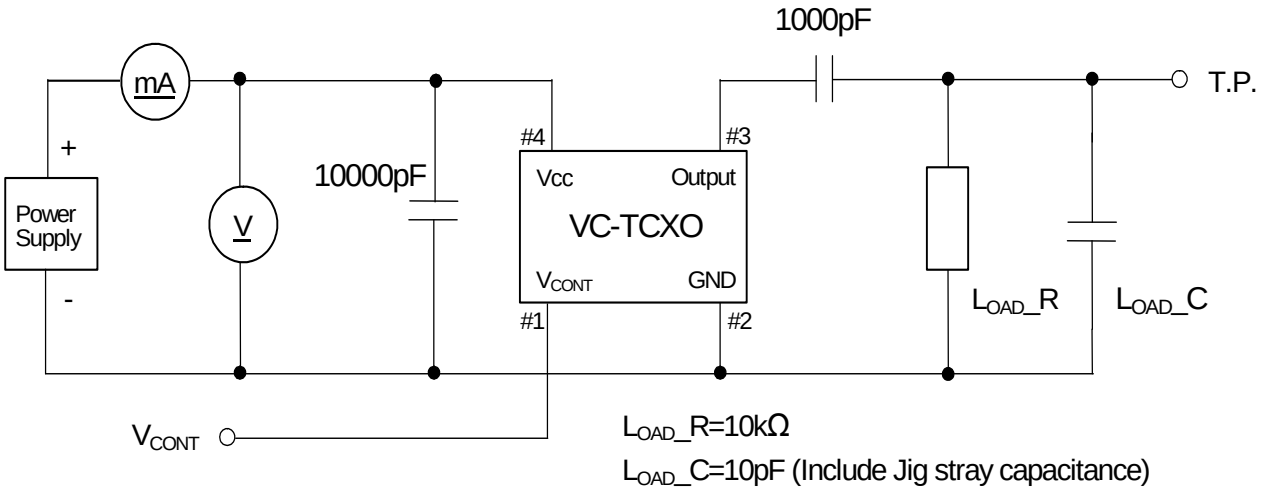

L_{OAD}_R=10kΩ
L_{OAD}_C=10pF (Include Jig stray capacitance)

TITLE DSA211SDN TYPE SPECIFICATION	Remark		
Date 2017/07/18	Spec. No. ZC12303	Rev. -	Page 2/2