1. Device Name TCXO
2. Model Name DSB211SDN
3. Nominal Frequency 54.000 MHz
4. Mass 0.015g max.

5. Absolute Maximum Ratings

	Item	Symbol	Rating	unit
1	Supply Voltage	V_{CC}	-0.3~+4.6	V
2	Storage Temperature Range	$T_{_STG}$	-40~+105	°C

6. Recommended Operating Conditions

	Item	Symbol	min.	typ.	max.	unit
1	Supply Voltage	V_{CC}	+3.135	+3.3	+3.465	V
2	Load Impedance (resistance part)	L_{OAD}_R	9	10	11	kΩ
	(parallel capacitance)	L_{OAD}_C	9	10	11	pF
3	Operating Temperature Range	$T_{_OPR}$	-30	-	+85	°C

7. Electrical Characteristics

(T_A=-30~+85°C, L_{OAD}_R//C=10kΩ//10pF, V_{CC}=+3.3V, unless otherwise noted)

	Item	Conditions	Limits			unit	Notes
			min.	typ.	max.		
1	Current Consumption		-	-	+2.5	mA	
2	Output Level		0.8	-	-	V_{P-P}	1
3	Symmetry	GND level (DC cut)	40/60	-	60/40	%	
4	Harmonics		-	-	-5	dBc	
5	Frequency Stability 1.Tolerance	After 2 times reflow Ref. to nominal frequency	-	-	±1.5	ppm	2,3
	2.vs Temperature	T_A=-30~+85°C Ref. to frequency (T_A=+25°C)	-	-	±0.5	ppm	
	3.vs Supply Voltage	V_{CC}=+3.3V±5%	-	-	±0.2	ppm	
	4.vs Load Variation	L_{OAD}_R//C=(10kΩ//10pF)±10%	-	-	±0.2	ppm	
	5.vs Aging	T_A=Room ambient	-	-	±1.0	ppm/year	
6	Start Up Time	@90% of final Vout level	-	-	2.0	ms	
7	SSB Phase Noise	Relative to F0 level offset 100Hz	-	-	-105	dBc/Hz	
		Relative to F0 level offset 1kHz	-	-	-125	dBc/Hz	
		Relative to F0 level offset 10kHz	-	-	-145	dBc/Hz	
		Relative to F0 level offset 100kHz	-	-	-150	dBc/Hz	
		Relative to F0 level offset 1MHz	-	-	-150	dBc/Hz	

Notes
1. Clipped sine wave (DC-coupled)
2. T_A=+25°C
3. Please leave after reflow in 2h or more at room ambient.

TITLE	Remark		
DSB211SDN TYPE SPECIFICATION			
Date	Spec. No.	Rev.	Page
2017/11/16	ZC12734	-	1/2

8. Outline, Pin Connections

Outline

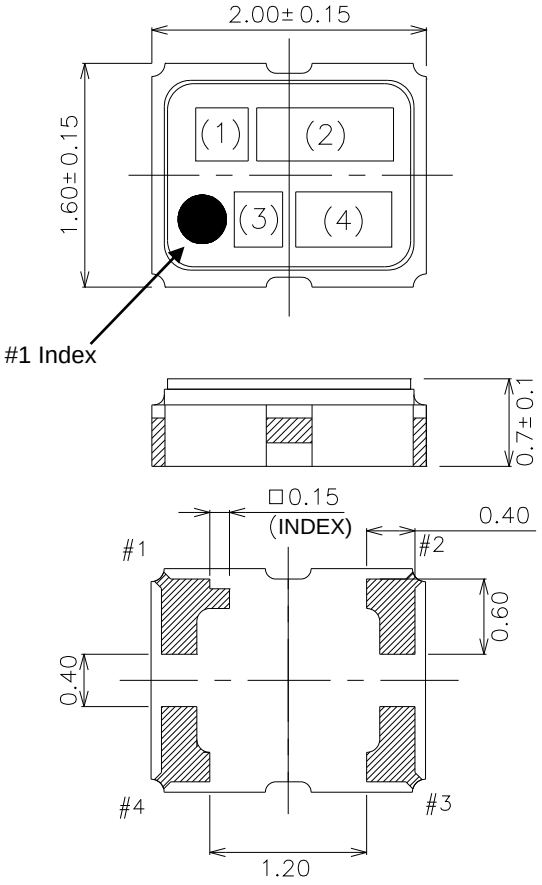

Pin Connections

Pin No.	Connection
#1	GND
#2	GND
#3	Output
#4	V_{CC}

Marking

(1) Model code	BN
(2) Frequency	54.0 (MHz, 3digits)
(3) Logo	D
(4) Date code	Year (1digit) +Week (2digits) e.g.2017/1/1 → 701

unit: mm
Dimensional Tolerance: ±0.1
(Unless otherwise noted)

9. Measurement Circuit

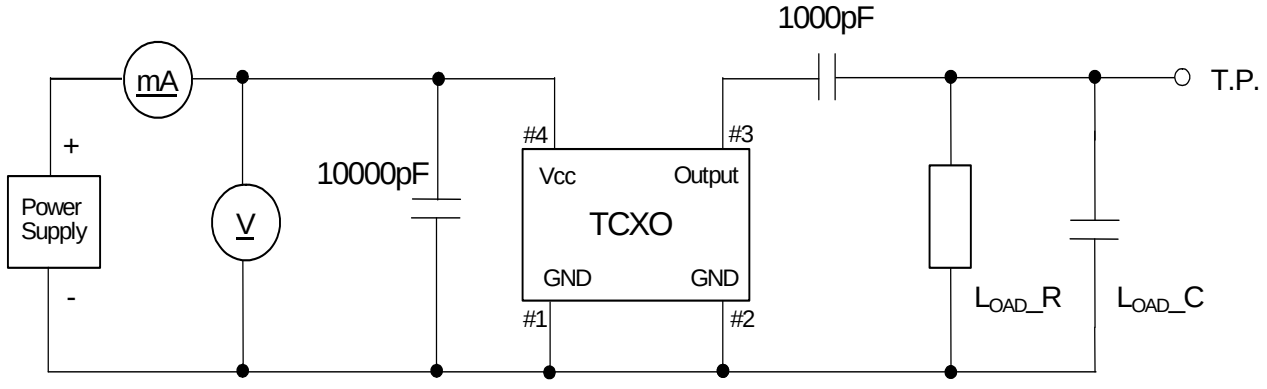

L_{OAD}_R=10kΩ
L_{OAD}_C=10pF (Include Jig stray capacitance)

TITLE	Remark		
DSB211SDN TYPE SPECIFICATION			
Date	Spec. No.	Rev.	Page
2017/11/16	ZC12734	-	2/2