Serial No. : 2017-0416
DATE : 2017/05/12

Shanghai Winson Electronics Co.,LTD

ITEM : CRYSTAL OSCILLATOR

TYPE : DSB221SDN

NOMINAL FREQUENCY : 10.000MHz

SPEC No. : 1XXB10000MAA

If there is a change in this specifications, the specification number may be changed.

RECEIPT	
DATE	
RECEIVED	(signature) (name)

General Manufacturer of Quartz Devices
DAISHINKU CORP.
1389 Shinzaike, Hiraoka-cho, Kakogawa, Hyogo
675-0194 Japan
Phone (81)79-425-3141 Fax (81)79-425-1134
http://www.kds.info/index_en.htm

C.ENG.

ENG. E. Kameda

1. Device Name TCXO
2. Model Name DSB221SDN
3. Nominal Frequency 10.000 MHz
4. Mass 0.02g max.

5. Absolute Maximum Ratings

	Item	Symbol	Rating	unit
1	Supply Voltage	V_{CC}	-0.3~+4.6	V
2	Storage Temperature Range	$T_{\_STG}$	-40~+85	°C

6. Recommended Operating Conditions

	Item	Symbol	min.	typ.	max.	unit
1	Supply Voltage	V_{CC}	+3.135	+3.3	+3.465	V
2	Load Impedance (resistance part)	L_{OAD}_R	9	10	11	kΩ
	(parallel capacitance)	L_{OAD}_C	9	10	11	pF
3	Operating Temperature Range	$T_{\_OPR}$	-40	-	+85	°C

7. Electrical Characteristics

(T_A=-40~+85°C, L_{OAD}_R//C=10kΩ//10pF,V_{CC}=+3.3V, unless otherwise noted)

	Item	Conditions	Limits			unit	Notes
			min.	typ.	max.		
1	Current Consumption		-	-	1.5	mA	
2	Output Level		0.8	1.2	-	V_{P-P}	1
3	Symmetry	GND level(DC cut)	40/60	-	60/40	%	
4	Harmonics		-	-	-5	dBc	
5	Frequency Stability 1.Tolerance	After 2 times reflow Ref. to Nominal Frequency.	-	-	±1.5	ppm	2,3
	2.vs Temperature	T_A=-40~+85°C Ref. to Frequency (T_A=+25°C)	-	-	±0.5	ppm	
	3.vs Supply Voltage	V_{CC}=+3.3V±5%	-	-	±0.2	ppm	
	4.vs Load Variation	L_{OAD}_R//C=(10kΩ//10pF)±10%	-	-	±0.2	ppm	
	5.vs Aging	T_A=Room ambient	-	-	±1.0	ppm/year	
6	Start Up Time	@90% of final Vout level	-	-	2.0	ms	
7	SSB Phase Noise	Relative to F0 level offset 1kHz	-	-	-130	dBc/Hz	

Notes

1. Clipped sine wave (DC-coupled)
2. T_A=+25°C
3. Please leave after reflow in 2-hour or more at room ambient.

TITLE	Remark		
DSB221SDN TYPE SPECIFICATION			
Date	Spec. No.	Rev.	Page
2017/05/12	1XXB10000MAA	-	1/13

8. Outline, Pin Connections

Outline

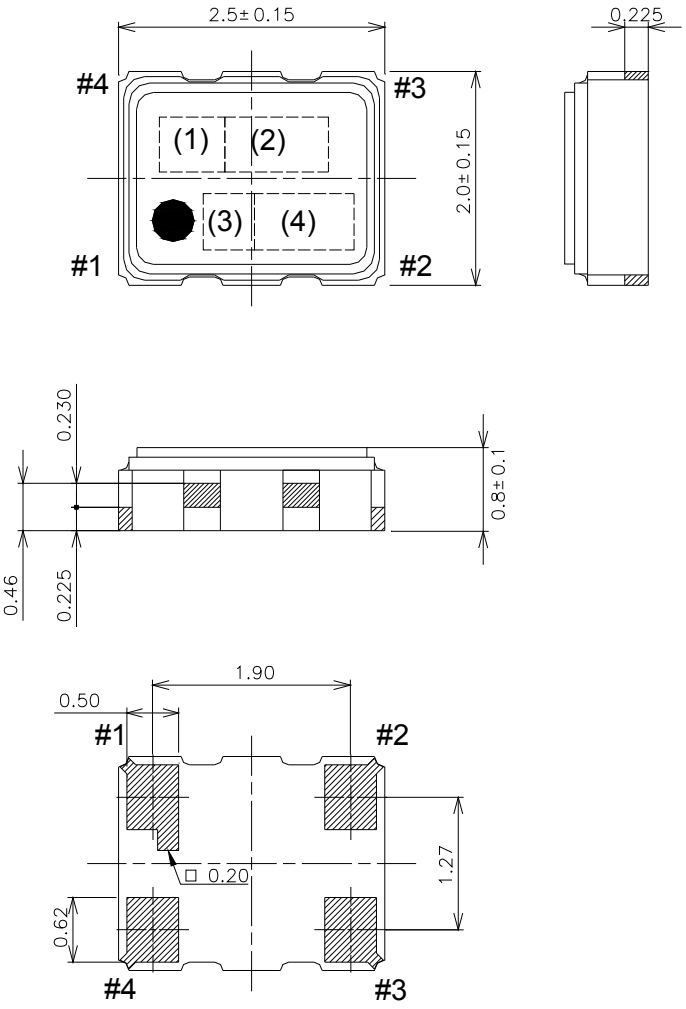

Pin Connections

Pin No.	Connection
#1	GND
#2	GND
#3	Output
#4	V_{CC}

Marking

(1) Model code BN

(2) Frequency 10.0 (MHz, 3digits)

(3) Date code Year (1digit) +Week (2digits)

e.g.2017/01/01→ 701

unit: mm

Dimensional Tolerance: ±0.15

(Unless otherwise noted)

9. Measurement Circuit

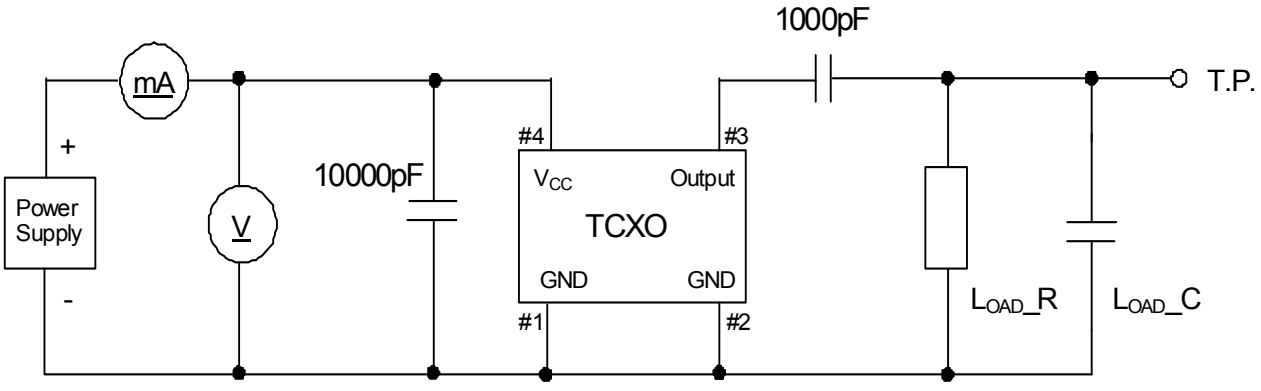

L_{OAD}_R=10kΩ

L_{OAD}_C=10pF (Include Jig stray capacitance)

TITLE	Remark		
DSB221SDN TYPE SPECIFICATION			
Date	Spec. No.	Rev.	Page
2017/05/12	1XXB10000MAA	-	2/13

10. Mechanical Characteristics

All test is performed after 3times reflow (Clause.13) except 10.10 (Resistance to soldering heat)

	Item	Description	Requirements
1	Drop	Natural drop (On concrete) Mounting on the set or test fixture.(Total weight 100g) Height : 150cm Direction : X,Y,Z, 6directions Test cycle : 3cycles Reference specification : EIAJ-ED-4702A Method5	df/f=<±1.0ppm
2	Vibration	Sweep range : 10~500Hz Sweep speed : 11min/cycle Amplitude : 1.5mm (10~55Hz) Acceleration : 200m/s^2 (55~500Hz) Direction : X,Y,Z, 3directions Test cycle : 10cycles Reference specification : IEC 60068-2-6	df/f=<±0.5ppm
3	Shock	Acceleration : 1000m/s^2 Direction : X,Y,Z, 6directions Duration : 6ms Test cycle : 3cycles/each directions Reference specification : IEC 60068-2-27	df/f=<±0.5ppm
4	PCB bend strength	PWB : t=1.6mm Pressure speed : 1.0mm/s Bend width : 1→2→3mm Duration : 10±1s Reference specification : IEC 60068-2-21 Ue1	df/f=<±0.5ppm No visible damage. No leak damage.
5	Adherence nature	PWB : t=1.6mm Direction : X,Y, 2directions Pressure : 10N Duration : 10±1s Reference specification : IEC 60068-2-21 Ue3	df/f=<±0.5ppm No visible damage. No leak damage.
6	Package strength	Pressure : 10N Duration : 10±1s Reference specification : IEC 60068-2-77	df/f=<±0.5ppm No mechanical damage. No leak damage.
7	Gross leak	It is immersed for 3min into +125±5°C Chlorofluorocarbon (CFCs) liquid. Reference specification : IEC 60068-2-17	No continuous air bubbles.
8	Fine leak	It shall be measured by the helium leak detector after pressurization for 60min by the pressure of (3.92±0.49) x10^5 Pa in a helium gas atmosphere. Reference specification : IEC 60068-2-17	Less than 1.0x10^{-9}Pa m^3/s.
9	Solderability	Solder bath temperature : +245±5°C Duration : 3±0.3s Reference specification : IEC 60068-2-58	A new uniform coating of solder shall cover a minimum of 95% of the surface being immersed.
10	Resistance to soldering heat	1) Solder iron method Bit size : B(φ3) Bit temperature : +350±10°C Duration : 3+1/-0s /each terminal It shall be measured after 2h at room temperature, humidity. Reference specification : IEC 60068-2-20	df/f=<±0.5ppm dV_{OUT}=<±0.2V_{P-P} No visible damage.
		2) Reflow In refer to temperature profile shown in clause13. Test cycle : 3cycles It shall be measured after 2h at room temperature, humidity. Reference specification : IEC 60068-2-58	df/f=<±1.0ppm dV_{OUT}=<±0.2V_{P-P} No visible damage.

11. Environmental Characteristics

All test is performed after 3times reflow (Clause13)

	Item	Description	Requirements
1	Low temperature storage	Temperature : -40±3°C Duration : 1000h It shall be measured after 2h at room temperature, humidity. Reference specification : IEC 60068-2-1 Ab	df/f=<±1.0ppm dV_{OUT}=<±0.2V_{P-P} The electrical characteristics are satisfied.
2	High temperature storage	Temperature : +85±2°C Duration : 1000h It shall be measured after 2h at room temperature, humidity. Reference specification : IEC 60068-2-2 Bb	df/f=<±1.0ppm dV_{OUT}=<±0.2V_{P-P} The electrical characteristics are satisfied.
3	Humidity	Temperature : +85±2°C R.H. 85±5% Duration : 1000h It shall be measured after 2h at room temperature, humidity. Reference specification : IEC 60068-2-3	df/f=<±1.0ppm dV_{OUT}=<±0.2V_{P-P} The electrical characteristics are satisfied.
4	HTB	Temperature : +85±2°C Duration : 1000h BIAS : Max value of supply voltage It shall be measured after 2h at room temperature, humidity. Reference specification : IEC 60068-2-2 Bb	df/f=<±1.0ppm dV_{OUT}=<±0.2V_{P-P} The electrical characteristics are satisfied.
5	THB	Temperature : +40±2°C R.H. 90~95% Duration : 1000h BIAS : Max value of supply voltage It shall be measured after 2h at room temperature, humidity. Reference specification : IEC 60068-2-3	df/f=<±1.0ppm dV_{OUT}=<±0.2V_{P-P} The electrical characteristics are satisfied.
6	Thermal shock	Thermal shock : -40±3°C : 0.5h ⇔ +85±2°C : 0.5h Test cycle : 200cycles Shift time : 2~3min It shall be measured after 2h at room temperature, humidity. Reference specification : IEC pub.68-2-14.Na	df/f=<±1.0ppm dV_{OUT}=<±0.2V_{P-P} The electrical characteristics are satisfied.
7	ESD	Model : Machine Model (MM) V=±200V (C=200pF, R=0Ω) Number of times : 3times Each terminal except common terminal. (Connect to test terminal) Reference specification : EIA/JESD22-A115	df/f=<±1.0ppm dV_{OUT}=<±0.2V_{P-P} The electrical characteristics are satisfied.
		Model : Human Body Model (HBM) V=±1500V (C=100pF, R=1500Ω) Number of times : 3times Each terminal except common terminal. (Connect to test terminal) Reference specification : EIA/JESD22-A114	df/f=<±1.0ppm dV_{OUT}=<±0.2V_{P-P} The electrical characteristics are satisfied.

12. Flatness of Terminal

When the component is placed on the flat surface, the gap from the connecting terminal shall not exceed 0.05 mm.

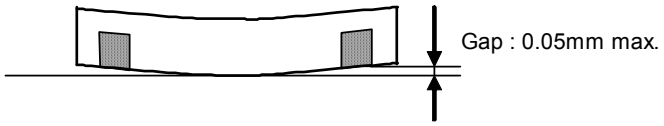

13. Reflow Profile

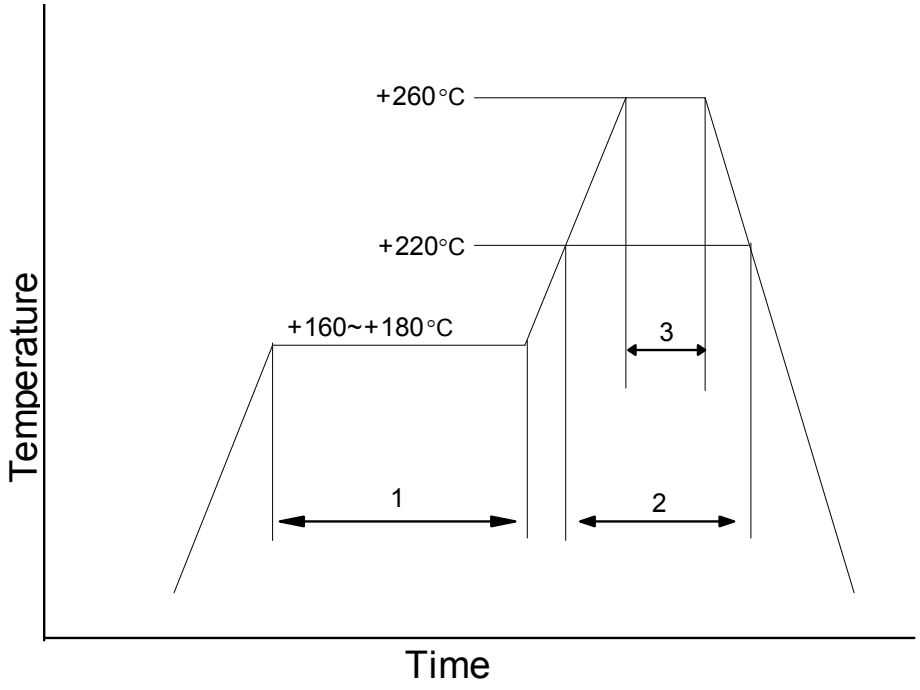

1	Preheat	+160~+180°C 120s
2	Primary Heat	+220°C 60s
3	Peak	+260°C 10s max.

14. Terminals / Land Pattern Layout / Metal Mask Hole

14.1 Terminals

A through hole is not located on the bottom (mounting side).

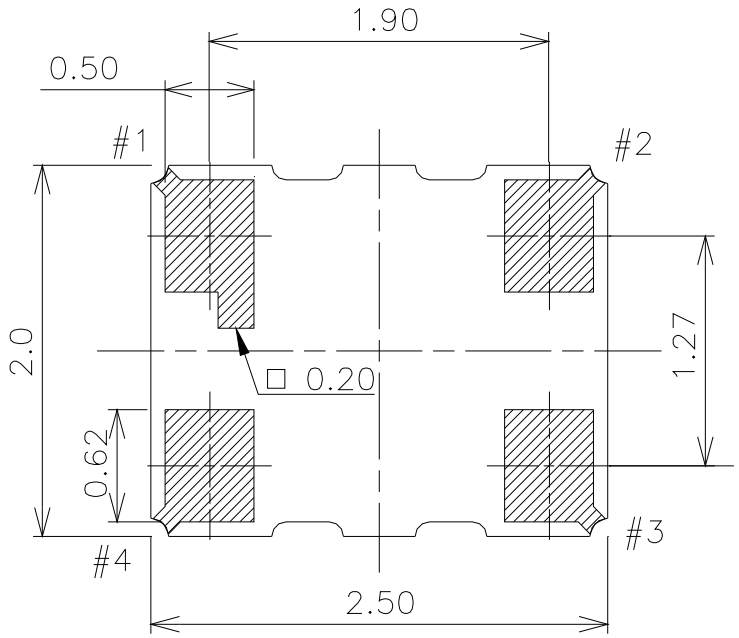

unit: mm
Dimensional Tolerance: ±0.15mm

Mounting Terminal

14.2 Land Pattern Layout / Metal Mask Hole

The following land pattern is reference design. The electrical characteristic shall be satisfied with mounting to this land. The land pattern can be changed in the limits to which a test land and a mounting land are not connected. And it does not any effect to the electrical characteristics. Mask thickness recommends 0.12mm.

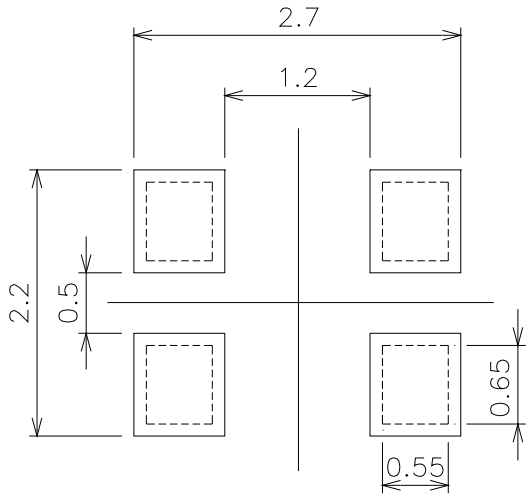

unit: mm

Land Pattern
Metal Mask Hole

15. Packing Condition

15.1 Taping package

(1) Emboss tape format and dimensions
See Fig.1

(2) Quantity on reel
3000pcs. max. / reel

(3) Taping specification
See Fig.2
No lack of a product.

(4) Reel specification
See Fig.3

(5) Taping material list
See right table.

Taping material List
Cover Tape : PET + Olefin Resin (Conductivity)
Emboss : PS (Conductivity)
Reel : PS (Conductivity)

15.2 Packing

The products packed in the antistatic bag.
*Moisture sensitivity level : IPC/JEDEC Standard J-STD-033 / Level 1
No dry pack required and baking after re-storage is unnecessary.

15.3 Packing box

Max 10 reels/packing box. However, in the case of less than 10 reels, It is contained by any boxes.
The space in a box is fill up with a cushion.

15.4 Label detail

A Lot label is put on a reel and a shipping label and Pb-Free label is put on a packing box.

Lot label

TYPE	(Model Name)
SPEC NO.	(Spec. Number)
PARTS NO.	(User's Parts Number)
LOT NO.	(Lot Number)
FREQ.	(Nominal Frequency)
Q'TY	(Quantity)
KDS	DAISHINKU CORP.

Shipping label

ITEM	(Model Name)
SPEC	(Spec. Number)
DELIVERY DATE	(Delivery Date)
Q'TY	(Quantity)
NOTES	(User's Parts Number)
DAISHINKU CORP.	

Pb-free Label



Lot label (Example)

TYPE	XXXXXXXX
SPEC NO.	XXXXXXXXXXXX
PARTS NO.	XXXXXXXXXXXX
LOT NO.	XXXXXXXXX
FREQ	XX.XXX MHz
Q'TY	XXXXpcs.
KDS	Made in Japan

Formation of a lot number

e.g. AH7101001

A	H	7101	001
Manufacturing site code	Product code	year/ month/ day	Serial No.

The notation method of a manufacture year, month, and day. (4digits alphanumeric character)

YMDD	(4digits)	e.g.) 2017 /01 /01→ 7101
Y	Year	1digit (Last digit of Year)
M	Month	1digit alphanumeric symbol
DD	Day	2digits numerical characters of day

Month	Jan.	Feb.	Mar.	Apr.	May.	Jun.	Jul.	Aug.	Sep.	Oct.	Nov.	Dec.
Symbol	1	2	3	4	5	6	7	8	9	O	N	D

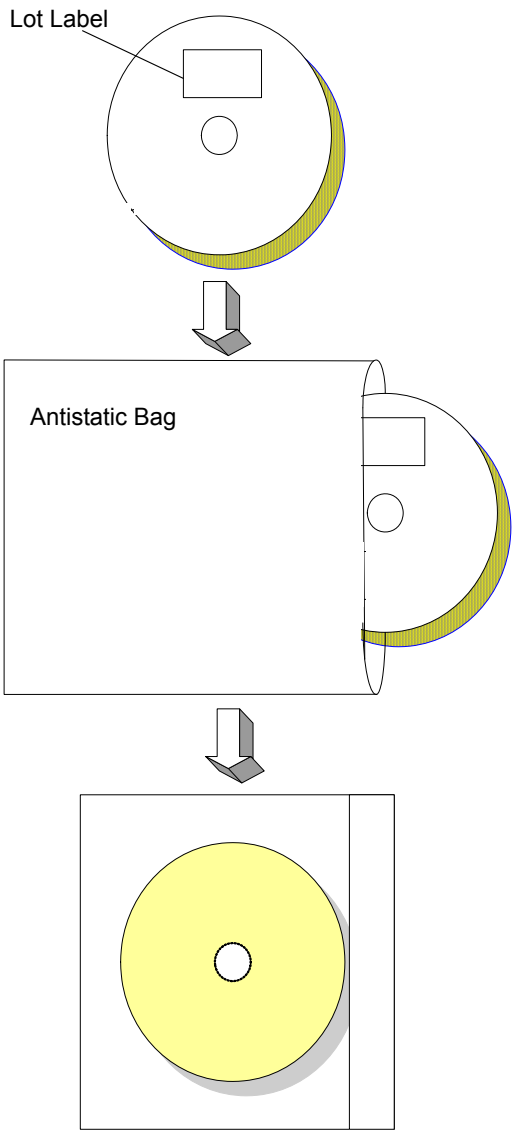

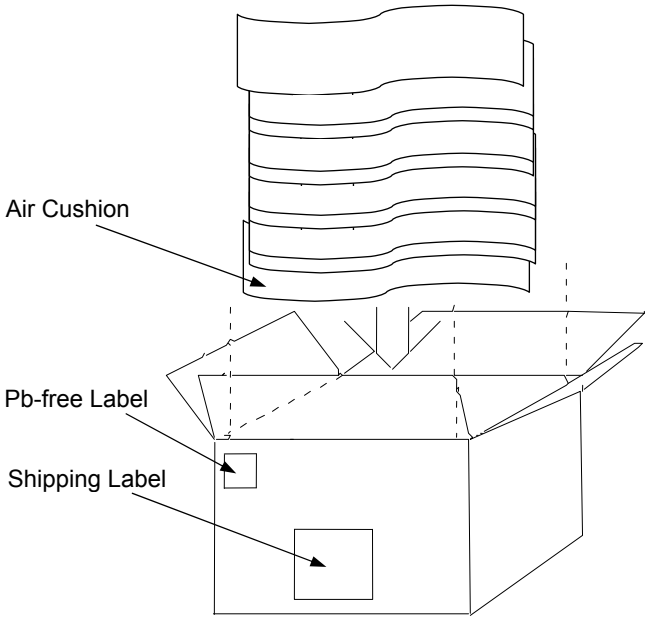

The product is packed up with the method which does not break in the handling by a shipping agent.

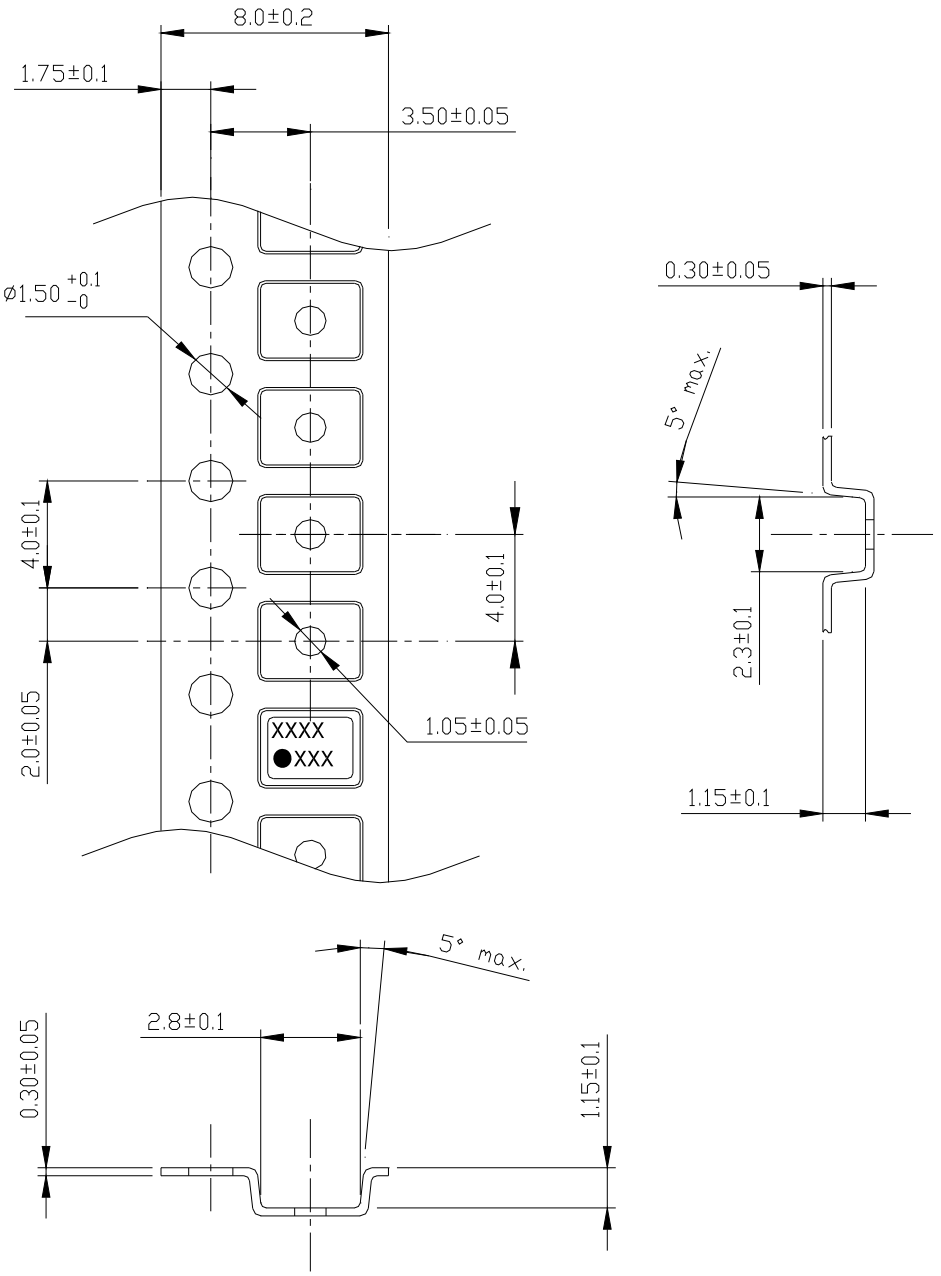

1. Clearance of an embossing tape, and a product unit: mm

Direction	Pocket size	TCXO size	Clearance
L	2.8±0.1	2.5±0.15	0.3±0.25
W	2.3±0.1	2.0±0.15	0.3±0.25
H	1.15±0.1	0.9 max.	0.25 min.

2. Quality : Polystyrene (Conductivity)

3. Tensile strength of an embossing tape : more than 14N

unit: mm

Fig.1. Emboss tape format and dimensions

TITLE DSB221SDN TYPE SPECIFICATION	Remark		
Date 2017/05/12	Spec. No. 1XXB10000MAA	Rev. -	Page 9/13

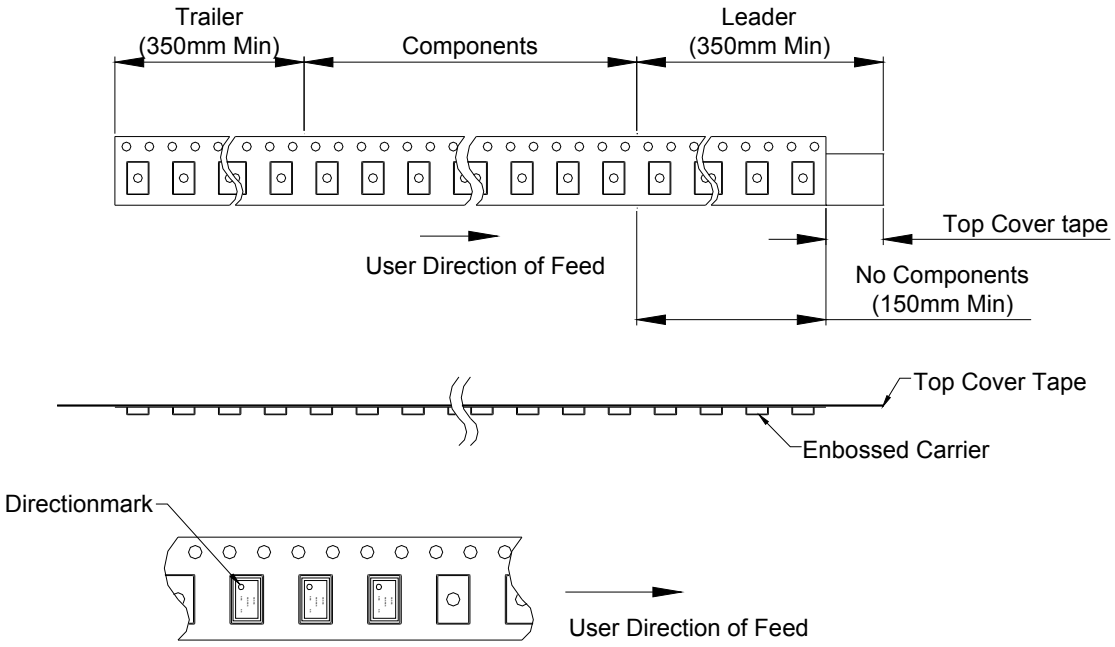

When a tape end is taken out to the front, sprocket holes becomes right hand side.

Peel strength
Pulling angle 165~180°, pulling speed at 300mm/min, strength should be 0.2~0.7N.

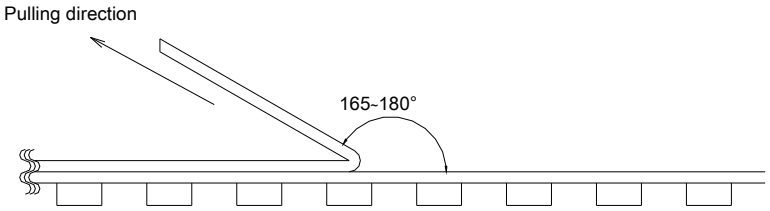

Fig.2. Taping specification

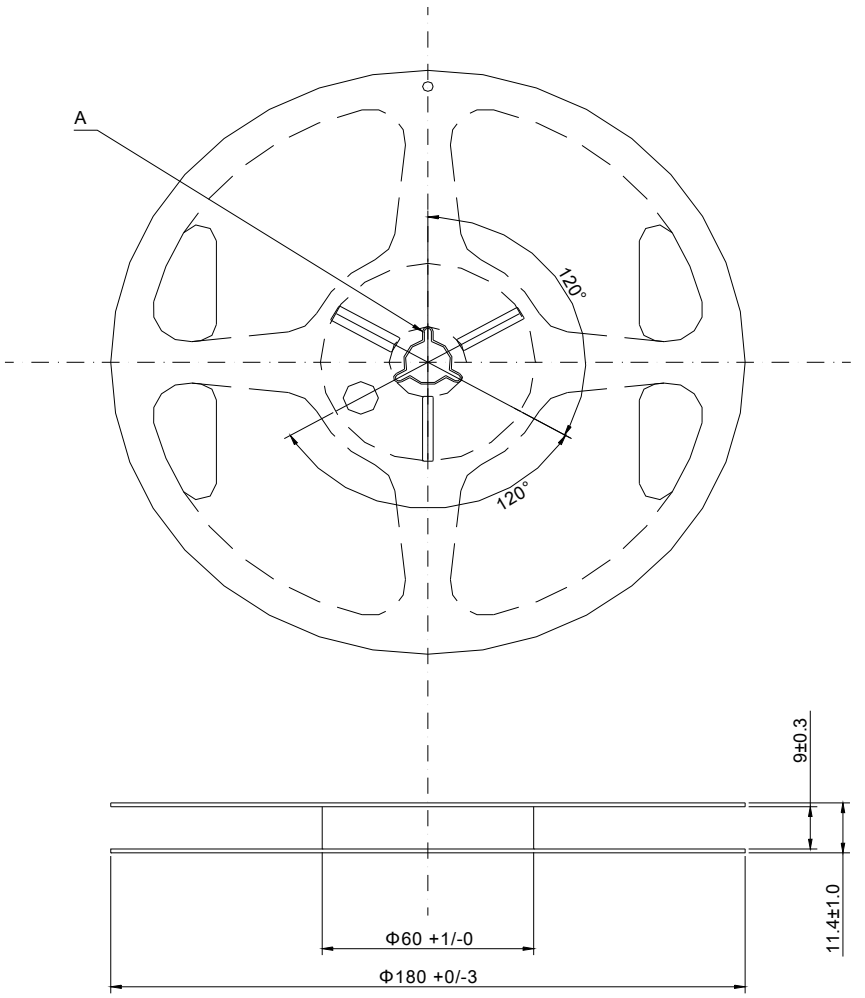

Material:Polystyrene (Conductivity)
unit:mm

Section A

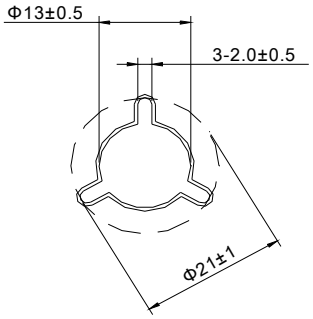

Fig.3. Reel specification

TITLE DSB221SDN TYPE SPECIFICATION		Remark	
Date 2017/05/12	Spec. No. 1XXB10000MAA	Rev. -	Page 11/13

16. Notes on mounting and handling

16.1 Storage environment

(1) The temperature and humidity of a storage place, Please give +5~+40°C and 40~85% as a standard.

(2) Please use this product within one year from the packing label date of issue.

(3) Please avoid the place which generates corrosive gas, and the place with much dirt.

(4) Please keep it in a place with little temperature change.
Dew condensation arises owing to a rapid temperature change and solderability becomes bad.

16.2 Be cautions to static electricity and high voltage.

16.3 This product has sufficient durability to fall and vibration. However, conditions may change to the fall after mounting to a PWB, and vibration. When you should drop on a floor the PWB which mounted the product or too much shock is added. Please use after a performance check.

16.4 Please check that the curvature of the substrate at the time of substrate cutting does not affect product. Moreover, especially when a product is near the position of a PWB guide pin, and the position of PWB break, be careful.

16.5 The part concerned does not correspond to washing.

16.6 Please repair at +260°C in 10s with hot air or +350°C in 5s with solder Iron.

17. Mandatory control

17.1 Ozone-depleting substance

It regulates by the U.S. air purifying method (November, 1990 establishment). ODS of CLASS1 and CLASS2 is not contained or used.

17.2 PBDE, PBBs

PBDE, PBBs are not contained into all the material currently used for this product.

17.3 RoHS

Following material restricted by RoHS (2011/65/EU) is not included or used. Lead, mercury, cadmium, hexavalent , chromium ,PBB and PBDE.

17.4 Law Concerning Examination and Regulation of Manufacture, etc. of Chemical Substances

All the material currently used for this product is based on "Law Concerning Examination and Regulation of Manufacture, etc. of Chemical Substances". It is a registered material.

17.5 Lead

Leads, such as solder, are not used for this product. (Lead Free)

17.6 About the existence of silver and mercury use

The silver of very small quantity is contained in the conductive adhesives used for adhesion of Blank.
Moreover, mercury is used. It does not get down.

18. The country of origin / factory name / address

Country of origin: Japan
Factory name: DAISHINKU Corp. Tottori Production Div.
Address: 7-3-21 Wakabadai minami, Tottori 689-1112

2017-0416 REVERSION RECORD

Rev. No.	Date	Reason	Contents	Approved	Checked	Drawn
-	2017/05/12	-	Initial Release	T.Soga	T.Soga	E.Kameda