1. Device Name VC-TCXO
2. Model Name DSA321SDA
3. Nominal Frequency 38.880 MHz
4. Mass 0.03g max.

5. Absolute Maximum Ratings

| | Item | Symbol | Rating | unit |
|---|---|---|---|---|
| 1 | Supply Voltage | $V_{CC}$ | -0.3 ~ +6.0 | V |
| 2 | Storage Temperature Range | $T_{_STG}$ | -40 ~ +85 | °C |

6. Recommended Operating Conditions

| | Item | Symbol | min. | typ. | max. | unit |
|---|---|---|---|---|---|---|
| 1 | Supply Voltage | $V_{CC}$ | +3.135 | +3.3 | +3.465 | V |
| 2 | Load Impedance (resistance part) | $L_{oad}_R$ | 9 | 10 | 11 | kΩ |
| | (parallel capacitance) | $L_{oad}_C$ | 9 | 10 | 11 | pF |
| 3 | Control Voltage Range | $V_{CONT}$ | +0.5 | +1.5 | +2.5 | V |
| 4 | Operable Temperature Range | $T_{_OPR}$ | -40 | - | +85 | °C |

7. Electrical Characteristics

($T_A$=-40 ~ +85°C, Load=10kΩ//10pF, $V_{CC}$=+3.3V, $V_{CONT}$=+1.5V unless otherwise noted)

| | Item | Conditions | Limits | | | unit | Notes |
|---|---|---|---|---|---|---|---|
| | | | Min. | typ. | max. | | |
| 1 | Current Consumption | | - | - | 2.0 | mA | |
| 2 | Output Level | | 0.8 | - | - | $V_{P-P}$ | 1 |
| 3 | Symmetry | GND level(DC cut) | 40/60 | - | 60/40 | % | |
| 4 | Frequency Stability | | | | | | |
| | 1.Tolerance | After 2 times reflow | - | - | ±1.5 | ppm | 2,3 |
| | 2.vs Temperature | $T_A$=-40 ~ +85°C $V_{CONT}$=+1.5V | | | ±0.5 | ppm | 4 |
| | 3.vs Supply Voltage | $V_{CC}$=+3.3V±5% | - | - | ±0.2 | ppm | |
| | 4.vs Load Variation | Load=(10kΩ//10pF)±10% | - | - | ±0.2 | ppm | |
| | 5.vs Aging | $T_A$=Room ambient | - | - | ±1.0 | ppm/year | |
| 5 | Start Up | @90% of final Vout level | - | - | 2.0 | ms | |
| 6 | Frequency Control | | | | | | |
| | 1.Control Range | $V_{CONT}$=+1.5±1.0V (Ref:+1.5V) | ±12.0 | - | ±18.0 | ppm | 5 |
| | 2.Input Resistance | | 500 | - | - | kΩ | |
| 7 | SSB Phase Noise | Relative to f0 level offset 100Hz | - | - | -105 | dBc/Hz | |
| | | Relative to f0 level offset 1kHz | - | - | -125 | dBc/Hz | |
| | | Relative to f0 level offset 10kHz | - | - | -135 | dBc/Hz | |
| | | Relative to f0 level offset 100kHz | - | - | -145 | dBc/Hz | |

Notes
1. Clipped sine wave (DC-coupled)
2. Ref. to Nominal Frequency
3. Please leave after reflow in 2h or more at room ambient.
4. Ref to frequency ($T_A$=25°C)
5. Positive slope (Frequency becomes high in proportion to frequency control voltage.)

| TITLE | Remark | | |
|---|---|---|---|
| VC-TCXO SPECIFICATION | | | |
| Date | Spec. No. | Rev. | Page |
| 2010/10/15 | ZC05834 | - | 1/2 |

## 8. Outline, Pin Connections

Outline

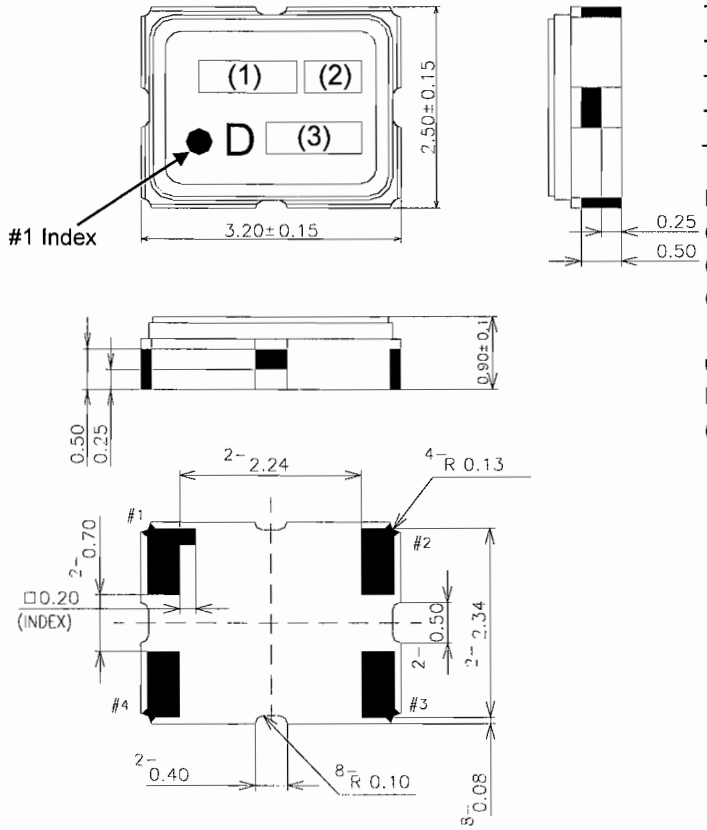


Pin Connections

| Pin No. | Connection |
|---|---|
| #1 | Vcont |
| #2 | GND |
| #3 | Output |
| #4 | Vcc |

Marking

| | |
|---|---|
| (1) Frequency | 38.88 (MHz, 4digits) |
| (2) Model code | S |
| (3) EIA Date code | Year (1digit) +Week (2digits)<br>e.g. 2010/1/1 → 001 |

unit :mm

Dimensional tolerance: ±0.15

(Unless otherwise noted)

## 9. Measurement Circuit

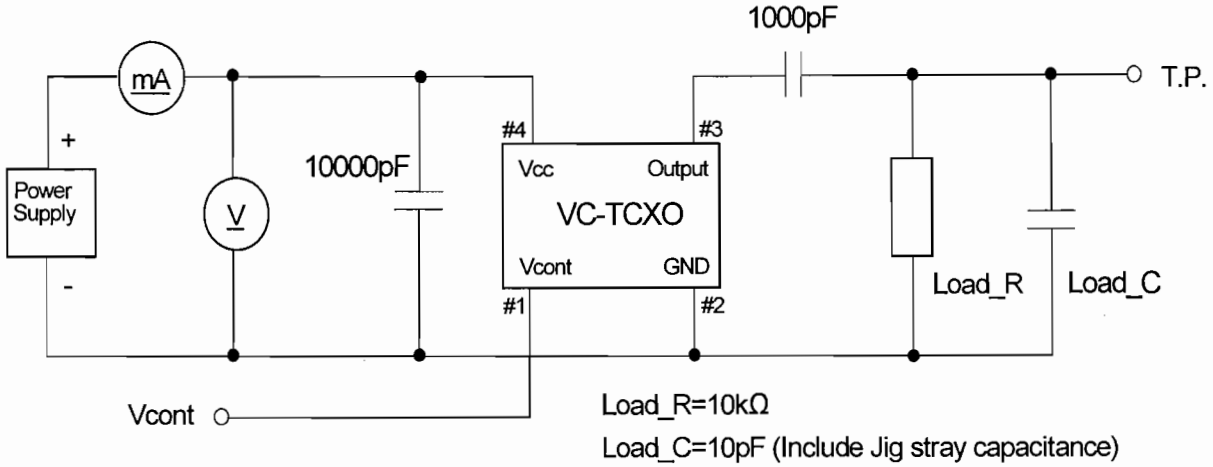


| TITLE | Remark | | |
|---|---|---|---|
| VC-TCXO SPECIFICATION | | | |
| Date<br>2010/10/15 | Spec. No.<br>ZC05834 | Rev.<br>- | Page<br>2/2 |

# INSPECTION DATA



USER : Shanghai Winson Electronics
Type : DSA321SDA
Freq. : 38.880 MHz

S.C.No. : ZC05834
Date : 2010.11.16

| No. | Reference Frequency [ MHz ] | Frequency Stability [ ppm ] Tolerance (Ref: Nominal Frequency) | vs. Temperature [ ˚C ] (Ref : +25˚C ) -40 | 0 | +50 | +85 | vs. Supply Voltage Vcc: 3.3V±0.165V | Frequency Control [ ppm ] Vcont: 1.5V±1.0V | | Current Consumption [ mA ] | Output Level [ V ] peak to peak |
|---|---|---|---|---|---|---|---|---|---|---|---|
| 1 | 38.880012 | +0.31 | +0.1 | -0.1 | -0.1 | +0.2 | -0.02/+0.01 | -15.6/+15.2 | | 1.36 | 0.94 |
| 2 | 38.880008 | +0.22 | -0.2 | +0.1 | -0.2 | -0.2 | -0.02/+0.02 | -15.5/+15.2 | | 1.36 | 0.93 |
| 3 | 38.880012 | +0.32 | +0.1 | -0.2 | -0.2 | +0.1 | -0.03/+0.03 | -14.6/+14.3 | | 1.38 | 0.94 |
| 4 | 38.880007 | +0.18 | -0.1 | -0.3 | +0.1 | +0.4 | -0.03/+0.02 | -15.4/+14.9 | | 1.38 | 0.94 |
| 5 | 38.880008 | +0.21 | -0.2 | -0.2 | +0.1 | +0.1 | -0.03/+0.02 | -15.5/+15.3 | | 1.35 | 0.93 |
| 6 | 38.880014 | +0.36 | -0.3 | -0.3 | -0.1 | +0.1 | -0.03/+0.01 | -14.7/+14.5 | | 1.35 | 0.94 |
| 7 | 38.880009 | +0.24 | -0.2 | -0.1 | -0.2 | +0.1 | -0.02/+0.02 | -15.8/+15.5 | | 1.37 | 0.94 |
| 8 | 38.880013 | +0.33 | -0.1 | -0.1 | +0.1 | +0.2 | -0.03/+0.04 | -15.7/+15.4 | | 1.35 | 0.92 |
| 9 | 38.880007 | +0.18 | -0.1 | -0.2 | -0.1 | +0.2 | -0.01/+0.03 | -15.0/+14.5 | | 1.38 | 0.94 |
| 10 | 38.880012 | +0.32 | +0.1 | -0.3 | +0.2 | +0.3 | -0.03/+0.02 | -14.6/+14.3 | | 1.35 | 0.94 |

Remarks :

Ta=+25℃, Load=10kΩ// 10pF, Vcc=+3.3V, Vcont=1.5V unless otherwise noted.

Equipment:

Oscilloscope Agilent 54616B
Probe TEK P6205

| Approve | Check | Test |
|---|---|---|
| K. Kishimoto | | K. Yasuda |

**DAISHINKU CORP.**