CF2600C1IS3H038.400000

High Performance Differential Oscillator

Features

Crystal oscillator P/N: **CF2600C1IS3H038.400000**
Frequency: **38.4MHz**
Output Signal Type: **HCSL**
Supply Voltage: **1.8V** ±5%
RMS Phase Jitter: **0.3ps** 12KHz ~ 5MHz Frequency Band
Frequency Stability: **±20 ppm**
Operating temperature Range: -40 ~ +85℃
Storage Temperature Range: -55 ~ +125℃

Applications

Network equipment (Router, Switch, Optical module, etc.)
Telecom, instrumentation, storage, server

Pin Description

Pin#	Pin Name	I/O	Function
1	OE	Input	H or Open: Enable Output; L: output high impedance
2	NC	NA	No connection
3	GND	Ground	Ground
4	OUT+	Output	Oscillator output
5	OUT-	Output	Complementary Oscillator output
6	VDD	Power	Power supply voltage

Pin Assignments

Top View

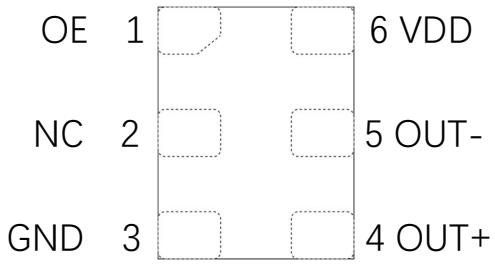

Ordering Information

Part/Order Number	Marking	Package	MPQ	Temperature	
CF2600C1IS3H038.400000	4h038	3225	3000	-40 ~ +85℃	

Electrical Characteristics

Parameters	Symbol	Condition	Min.	Typ.	Max.	Unit
Supply Voltage	Vdd		1.7	1.8	1.9	V
Output Frequency	Fout			38.4		MHz
Frequency Stability		**Note 1**		±20		ppm
Input Voltage High	VIH		0.7			Vdd
Input Voltage Low	VIL				0.3	Vdd
Duty Cycle	DC	=Tw/Tcycle *100%	45		55	%
Start-up Time	T_start				10	ms
Current Consumption	Idd	OE = High			40	mA
OE Disable Supply Current	I_oe	OE=Low			10	uA
Output High Voltage	VOH				0.9	V
Output Low Voltage	VOL		-0.15			V
OE Enable Time	T_oe				2	ms
OE Disable Time	T_od				200	ns
Rise/Fall Time	Tr, Tf	20%, 80%			0.47	ns
Jitter, Peak to Peak	Pk-Pk	Random			40	ps
Phase Jitter	RMS	12KHz ~ 5MHz			0.3	ps
Jitter, Accumulated	RMS(1-σ)	20000 Consecutive Periods			4	ps

Waveform Diagrams

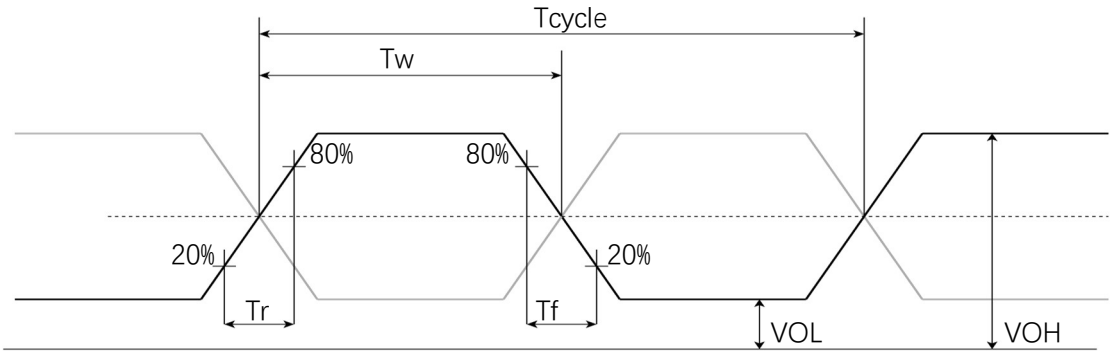

Termination Diagrams

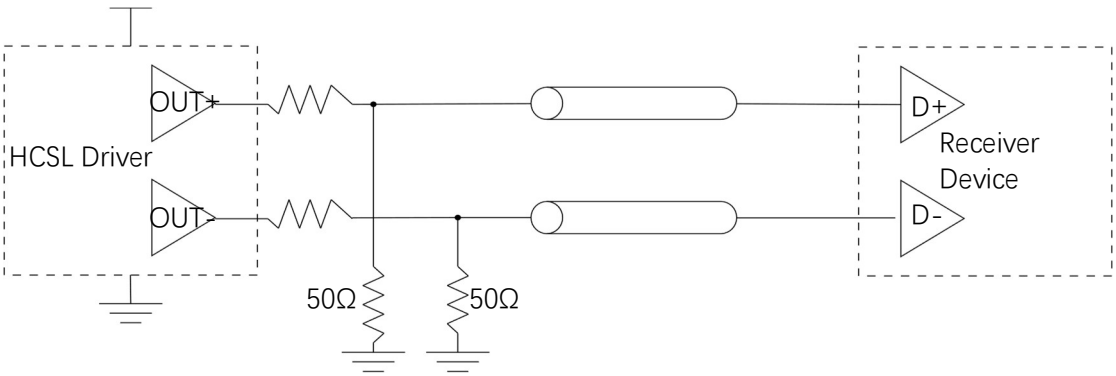

Dimensions and Patterns

Unit: mm

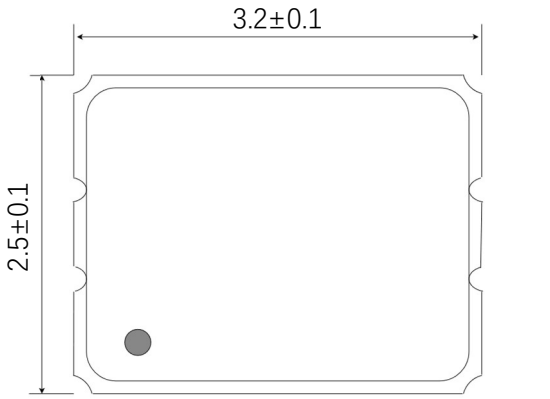

Top View



Side View

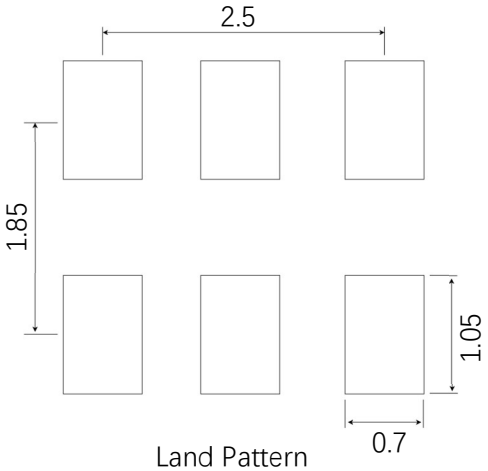

Land Pattern

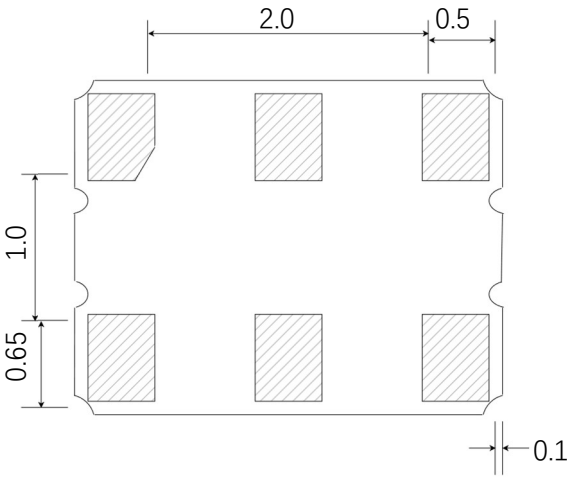

Bottom View

Marking



Revision History

Revisions	Release Date	Change Summary
0.1	Feb 28,2025	Initial Release