DATE 29-Aug-14

PART No. 1N212000BB0AS

SPECIFICATION OF SURFACE MOUNT TYPE

1	.TYPE	DSX321G
2	.NOMINAL FREQUENCY	12.000000 MHz
3	.LOAD CAPACITANCE(CL)	20.0 pF
4	.DRIVE LEVEL	10 uW +/- 2 uW
5	.FREQUENCY TOLERANCE	+/- 30 × 10^{-6} at 25 deg.C +/- 3 deg.C
6	.SERIES RESISTANCE	80 ohms max. / CL = SERIES
7	.FREQUENCY CHARACTERISTICS OVER TEMPERATURE	+/- 30 × 10^{-6} / -20 deg.C to +75 deg.C (ref. +25 deg.C)
8	.OPERATING TEMPERATURE RANGE	-20 deg.C to +75 deg.C
9	.STORAGE TEMPERATURE RANGE	-30 deg.C to +85 deg.C
10	.SHUNT CAPACITANCE(C0)	2.0 pF max.
11	.INSULATION RESISTANCE	500 Mohms min. at 100V DC
12	.OVERTONE ORDER	Fundamental
13	.DIMENSIONS	Refer to Fig-1

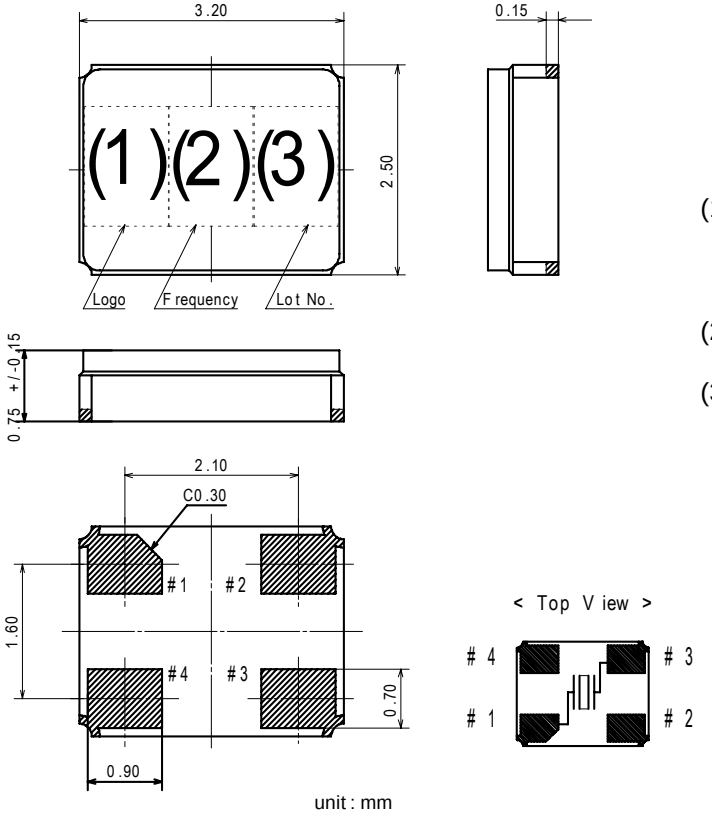

(1). Logo and Manufacturing Location
D : Japan
D : Indonesia

(2). Freq. 12

(3). Lot No.

unit : mm
Tolerance : +/-0.1
Pin #2 #4 is not connected with anything.
Pin #2 #4 must be connected with GND.

Fig.-1