Serial No. : 2011-1321
DATE : 2011/10/13

NXP Semiconductor Shenzhen Branch

ITEM : CRYSTAL RESONATOR

TYPE :	DSX321G
NOMINAL FREQUENCY :	62.400MHz
SPEC No. :	1N262400CC0A
	1C262400CC0A

Please acknowledge receipt of this specification by signing and returning a copy to us.

RECEIPT	
DATE	
RECEIVED	(signature) (name)

General Manufacturer of Quartz Devices
DAISHINKU CORP.
1389 Shinzaike, Hiraoka-cho, Kakogawa, Hyogo
675-0194 Japan
Phone (81)79-425-3141 Fax (81)79-425-1134
http://www.kds.info/index_en.htm

C.ENG. T. Okishio

ENG. M. Shibai

1. ELECTRICAL CHARACTERISTICS

(This test shall be performed under the conditions of temp.at 25 ± 3°C, Relative Humidity 60% max.)

(1) NOMINAL FREQUENCY	62.400000 MHz	
(2) OVERTONE ORDER	Fundamental	
(3) LOAD CAPACITANCE(CL)	12.0 pF	
(4) FREQUENCY TOLERANCE	±25 ppm max. (at +25 ± 3 °C)	
(5) DRIVE LEVEL	10 ± 2 μW	(300 μW max.)
(6) SERIES RESISTANCE	50 Ω max. (at Series)	
(7) OPERATING TEMPERATURE RANGE	-40 ~ +85 °C	
(8) FREQUENCY CHARACTERISTICS OVER TEMPERATURE	±30 ppm max. / -40 ~ +85 °C	(ref. to +25°C)
(9) SHUNT CAPACITANCE	1.25 pF Typ. (2pF max.)	
(10) INSULATION RESISTANCE	500MΩ min. / DC 100 ± 15V	
(11) STORAGE TEMPERATURE RANGE	-40 ~ +115 °C	
(12) MOTIONAL CAPACITANCE	4.344 fF (Typ.)	
(13) MOTIONAL INDUCTANCE	1.498 mH (Typ.)	

2. CONSTRUCTION

(1) DIMENSIONS AND MARKING	Refer to 4.

3. OTHER SPECIFICATIONS

(1) EMBOSS CARRIER TAPE & REEL	Refer to 5.
(2) PACKING	Refer to 6.
(3) REFLOW CONDITIONS (REFERENCE)	Refer to 7.
(4) LAND PATTERN (REFERENCE)	Refer to 8.
(5) RELIABILITY SPECIFICATION	Refer to 9.~11.
(6) OTHER HANDLING INSTRUCTIONS	Refer to 12.

4. DIMENSIONS AND MARKING

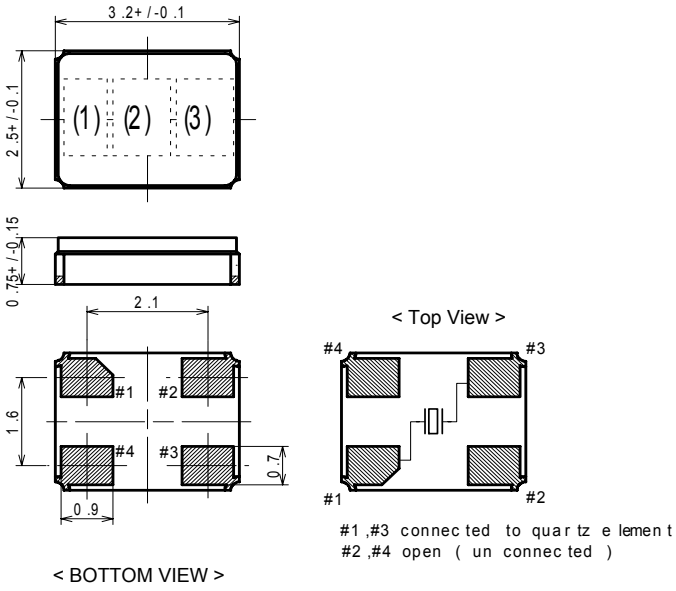

Figure-1

unit : mm
Tolerance : ±0.1

Logo(1) and Nominal Frequency (2) should be printed as follows by producing district

Made in INDONESIA --> Spec. No.: 1C262400CC0A , Logo : D , Frequency: 62

* Made in INDONESIA : Under Bar with D

Nominal Frequency (2) = Mark two digits from upper decimal point
(ex. 62.400000 MHz ----> 62)

Manufacturing lot No.(3)
(year) ex. 2011 shall be marked as ' 1 ' (The last digit of the year)
(Month) ex. October shall be marked as ' K ' (As shown in Table-1.)

(Table-1.)

Year	Jan.	Feb.	Mar.	Apr.	May.	Jun.	Jul.	Aug.	Sep.	Oct.	Nov.	Dec.
Mark	A	B	C	D	E	F	G	H	J	K	L	M

Plating material of a terminal. : Ni Plating + Au Plating.
A clearance between the soldering terminal portion and a print circuit board side should be less than 0.1mm.

5. EMBOSS CARRIER TAPE & REEL

(1) Dimensions of embossed carrier tape

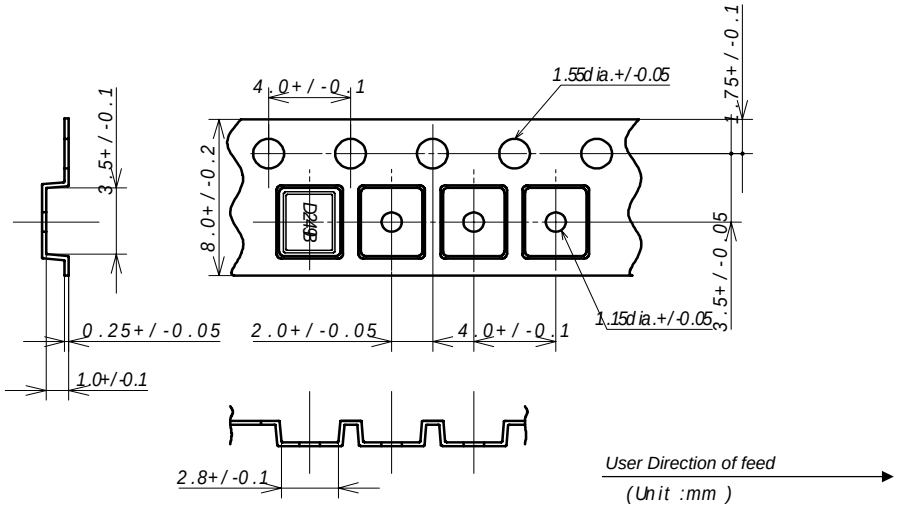

Figure-2

(2) Dimensions of tape reel

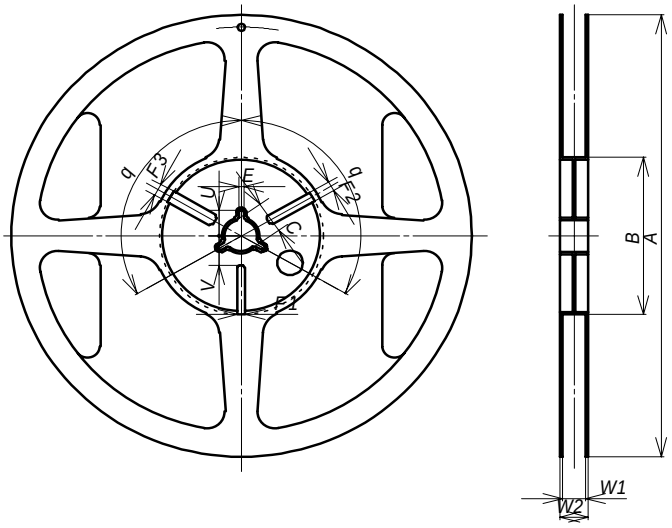

Figure-3

TITLE DSX321G TYPE QUARTZ CRYSTAL SPECIFICATION	REMARK		
DATE	SPEC. No.	REV.	PAGE
2011/10/13	1N262400CC0A 1C262400CC0A		3 / 12

(UNIT:mm)

Products				DSX321G
Item			Mark	Dimensions Angle
Flange	Diameter		A	180 Φ +0.0 / -3.0
	Inside of Frange		W1	9.0 ± 0.3
	Outside of Frange		W2	11.4 ± 1.0
	Inside Diameter		B	Φ60 +1.0-0
Center Core	Center Core Slit	Width	F1	3.0 ± 0.2
			F2	4.0 ± 0.2
			F3	5.0 ± 0.2
		Length	V	11.9 +0.5 / -0.0
		Angle	q	120°
	Spindle Diameter		C	13 Φ ± 0.2
	Key Seats	Width	E	2.0 ± 0.5
		Length	U	10.5 ± 0.4
		Angle	q	120°

(3) Storage condition
Temperature : +40 °C max.
Relative Humidity : 80% max.

(It is a guaranteed term because it obtains an excellent soldering: 6 months)

(4) Standard packing quantity

3,000 pcs/reel

(5) Material of the tape

Tape	Material
Carrier tape	Polystyrene+Carbon
Cover tape	Polyester

(6) Label contents

Type
Our specification No.
Your Part No.
Lot No.
Nominal Frequency
Quantity
Our Company Name
Producting Country

Stick a label on the each reel.

(7) Taping dimension

Leader	Cover-tape	The length of cover-tape in the leader is more than 400mm including empty embossed area.
	Carrier-tape	After all products were packaged, must remain more than twenty pieces or 400mm empty area, which should be sealed by cover-tape.
Terminal	Cover-tape	The tip of cover-tape shall be fixed temporary by paper tape and roll around the core of reel one round.
	Carrier-tape	The empty embossed area which are sealed by cover-tape must remain more than 40mm.

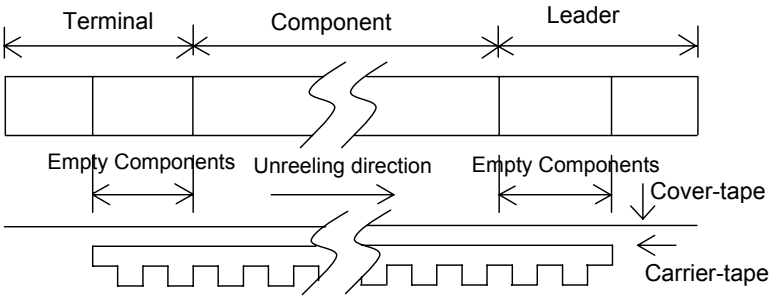

Figure-4

(8) Joint of tape
The carrier-tape and cover-tape should not be jointed.

(9) Release strength of cover tape
It has to between 0.1 ~ 0.7N under following condition.
Pulling direction 165 ~ 180 °
Speed 300mm/min.
Otherwise unless specified.

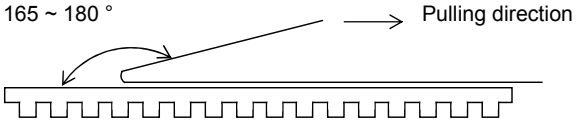

Figure-5

Other standards shall be based on JIS C 0806 -1990.

6. PACKING

(1) STORAGE METHOD

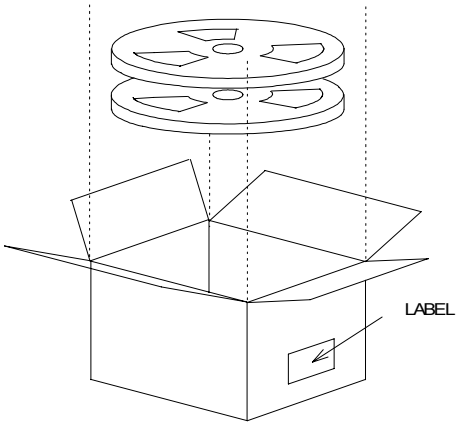

Label contents

The type of product
Lot No.
Specification
Quantity
Shipment Day
Remark

Figure-6

(2) BOX SIZE

From lot size packingsize shall be changed.
In the upper and lower part and the opening in box it shall be protected products using aircushion sheets.

7. REFLOW CONDITIONS (REFERENCE)

During the solder reflow process, please complete within following temperature, period.
Reflow soldering shall be allowed only 3 times.

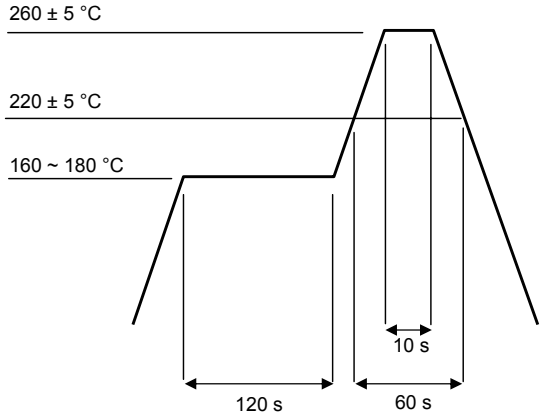

Total time : 240 s max.

Figure-7

HANDSOLDERING METHOD : 350 ± 10 °C , 3+1/-0s Each terminal once
(Please take care so that a soldering iron should not touch a product directly.)

8. LAND PATTERN (REFERENCE)

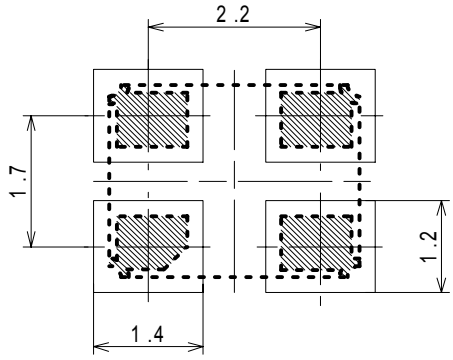

unit : mm

Figure-8

TITLE DSX321G TYPE QUARTZ CRYSTAL SPECIFICATION	REMARK		
DATE	SPEC. No.	REV.	PAGE
2011/10/13	1N262400CC0A 1C262400CC0A		7 / 12

9. MECHANICAL ENDURANCE

(1) SHOCK (ACCELERATION)
After the following test,parts shall conform specification 11.B.
1000m/s^2 by 6ms X,Y,Z each axis (6 directions) , 3cycles

(2) SHOCK (MOUNTING DROP)
After the following test,parts shall conform specification 11.B.
3cycles(18times) drop from 150 cm heights to concrete.
Further,parts shall be solderd on substrate, fixed Aluminum materials(about 100g).
Substrate materials : Glass Epoxy
1 cycle : each 1 times of 6 directions

(3) VIBRATION
After the following test,parts shall conform specification 11.B.
and no abnormal appearance shall be observed.

Frequency of Vibration	:	10 ~ 500 ~ 10 Hz
Amplitude(p-p)	:	Sine waves of 1.5mm or 100m/s^2
Cycle	:	11min
Vibration axis	:	X.Y.Z
Vibration period	:	2 h for each axis

(4) SEAL
Less than 2.0×10^{-9} Pa m^3/s. by Helium leak detector.
Also, no serial bubble is observed by Fluorocarbon tests.

(5) SOLDERABILITY
After the following test, more than 95% of terminal shall be covered by new solder.
3 ± 0.5 s dip in 245 ± 5 °C solder.
(Solder composition : Sn-3Ag-0.5Cu) (Use rosin type flux for solder.)

(6) RESISTANCE TO SOLDERING HEAT (REFLOW)
48 h past at room temperature from following test,parts shall conform specification 11.B.
perform the attached Reflow conditions to reference.

(7) RESISTANCE TO SOLDERING HEAT (HAND SOLDERING METHOD)
48 h past at room temperature from following test,parts shall conform specification 11.B.
350 ± 10°C , 3+1/-0s Each terminal once.

(8) SUBSTRATE BENDING
After the following test,parts shall conform specification 11.B.
and no abnormality shall be observed in external appearance and sealing
tightnen and others shall be based on ET-7403 of EIAJ.
Mount the specimen on substrate.
Apply the following pressure

Direction	:	see right figure
Speed	:	about 1.0 mm/s
Hours	:	5 ± 1 s
Amount of substrate	:	3 mm max.

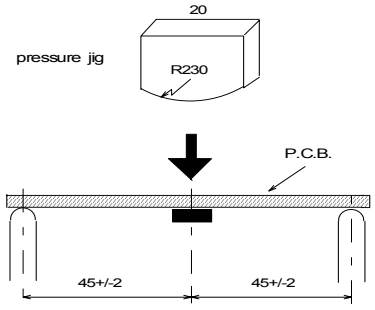

(9) SHEAR

After the following test,parts shall conform specification 11.B.
and no abnormality shall be observed in external appearance and sealing tightness and others shall be based on ET-7403 of EIAJ.

Mount the specimen on substrate.
Apply the following pressure

Weight	:	10 N
Hours	:	10 ± 1 s
Direction	:	see right figure

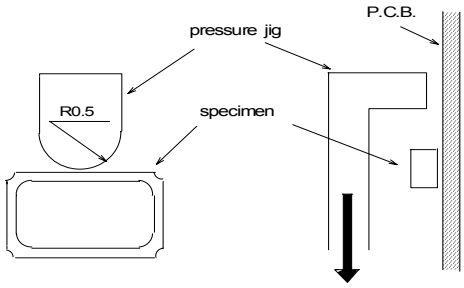

(10) BODY STRENGTH

After the following test,parts shall conform specification 11.B.
and no abnormality shall be observed in external appearance and sealing tightness and others shall be based on ET-7403 of EIAJ.

Mount the specimen on substrate.
Apply the following pressure

Weight	:	10N
Hours	:	10 ± 1 s
Direction	:	see right figure

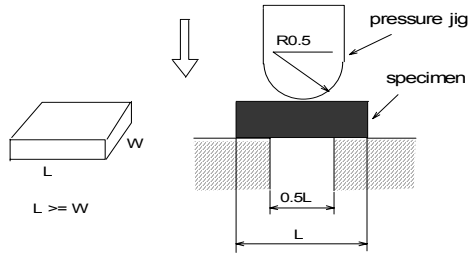

10. ENVIRONMENTAL ENDURANCE

(1) LOW TEMPERATURE
2 h past at room temperature after following test, parts shall conform specification 11.B.
240 h , -40 ± 3 °C.

(2) HUMIDITY
2 h past at room temperature after following test, parts shall conform specification 11.D.
240 h +85 ± 2 °C , relative humidity 85 ± 5%.

(3) HIGH TEMPERATURE
2 h past at room temperature after following test, parts shall conform specification 11.D.
240 h , +85 ± 2 °C.

(4) TEMPERATURE CYCLE
2 h past at room temperature after 25 cycles of followingtest, parts shall conform specification 11.D.

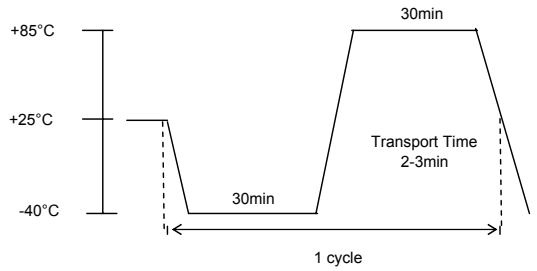

11. SPECIFICATION

Frequency Variation and Equivalent Resistance shall be within Table below after the reliability test.

Spec.	Frequency Variation	Equivalent Resistance
A	±2ppm	±15 % or 2.0 Ω max. (Use larger specification)
B	±5ppm	±20 % or 3.0 Ω max. (Use larger specification)
C	±10ppm	±20 % or 3.0 Ω max. (Use larger specification)
D	±20ppm	±25 % or 10.0 Ω max. (Use larger specification)

12. DSX321G TYPE QUARTZ CRYSTAL HANDLING INSTRUCTIONS

(1) SOLDERING

Please perform the attached Reflow conditions to reference within 3 times.

(2) MOUNT

Crystal products are designed to be compatible with automatic mounting.
Be sure to have a mounting test in advance by using the actual mounting machine
and check that the characteristics of the products are not damaged
by the automatic mounting.
In the process where the boad is warped, such as board separation process,
be careful that the warping does not influence the characteristics
and soldering of crystal products.
Since mounting by Ultrasonic welding and processing have a possibility of an excessive
vibration spreading inside a crystal resonator and becoming the cause of characteristic
deterioration and not oscillating, it does not recommend.

(3) WASHING

About use of the washing liquid of a basin system,
an alcoholic system, and a chlorofluorocarbon-replacing
material system, it is checking that it is satisfactory.
However please consult in advance about other washing liquid.
Although the check about ultrasonic washing is performed,
since it is an examination with a simple substance,
the check for the second time by the use state is recommended.

(4) THE CAUTIONS ON USE

The piece of crystal it is processed very smaller than the conventional thing
inside DSX321G series crystal unit may be damaged,
if excessive excitation electric power is applied.
Please use it below with the value specified on a catalog and specifications.
Please refrain from forming patterns between crystal land pattern's since there is
a possibility to cause crack in base.
If the temperature is higher than 280 °C, there is a possibility for the sealing glass to remelt.
Avoid using the product at temperature higher than specified.

(5) HANDLING OF A PRODUCT

DSX321G series has sufficient intensity to fall and vibration.
However when too much shock is added according to a certain cause,
the use after a characteristic check is recommended.

(6) STORAGE

Since the soldering nature of a terminal may be degraded,
please avoid storage in high temperature and a humid place.
Please keep it in the place which direct rays do not hit
and dew condensation does not generate.

2011-1321 REVISION RECORD

Rev.No	Date	Reason	Contents	Approved	Checked	Drawn
-	2011/10/13	-	The first edition.	T.Okishio	Y.Maeda	M.Shikai