EPSON
EXCEED YOUR VISION

Temperature Compensated Crystal Oscillator (TCXO)

TG-5035CG 19.2 MHz

- Reflowable and high density mounting type ultra small size SMD (2.5×2.0×0.9 mm).
- Using the heat-resisting type AT cut quartz crystal
  allows almost the same temperature soldering as universal SMD IC.
- Operating supply voltage : Vcc = 1.7 V to 3.6 V.

■ Specifications

1. Absolute maximum ratings

Parameter	Symbol	Value	Unit	Note
Supply voltage	V_{CC}-GND	-0.3 to 4.5	V	
Storage temperature range	$T_{_STG}$	-40 to +85	°C	

2. Operating range

Parameter		Symbol	Value			Unit	Note
			Min.	Typ.	Max.		
Power voltage		V_{CC}	1.7		3.6	V	
Power voltage		GND	0.0		0.0	V	
Operating temperature range		T_use	-40		+85	°C	
Output load		Load_R	9	10	11	kΩ	
		Load_C	9	10	11	pF	
	DC-cut capacitor	C_C	0.01			µF	

DC-cut capacitor is not included in our TCXO. Please insert DC-cut capacitor in output line.

DO NOT COPY

Confidential
Until: Permanent

3.Frequency characteristics

1) Output frequency 19.200000 MHz

2) Frequency characteristics

(V_{CC}= Arbitrary point between 3.6V from 1.7V, GND=0.0 V, Load 10 kΩ//10 pF(DC cut), T_use =+25 °C)

Parameter	Symbol	Value	Unit	Note
Frequency tolerance	f_tol(OSC)	+/- 1.5×10^{-6} Max.	-	T_use =+25 °C +/-2 °C After 2 times reflow soldering *1
Frequency / temperature coefficient	fo-Tc	+/- 0.5×10^{-6} Max.	-	T_use =-40 °C to +85 °C Based on frequency at +25 °C
Frequency / Load coefficient	fo-Load	+/- 0.2×10^{-6} Max.	-	Load :10 kΩ//10 pF +/-10 % each
Frequency / voltage coefficient	fo-Vcc	+/- 0.2×10^{-6} Max.	-	V_{CC} +/- 5%
Frequency aging	f_aging	+/- 1.0×10^{-6} Max.	-	T_use =+25 °C 1 year

*1 Measurement of frequency deviation is made 2h after reflow soldering.

4.Electrical characteristics

(V_{CC}= Arbitrary point between 3.6V from 1.7V, GND=0.0 V, Load 10 kΩ//10 pF(DC cut), T_use = +25 °C)

Parameter	Symbol	Value			Unit	Note
		Min.	Typ.	Max.		
Current consumption	Icc			2.0	mA	
Output level	Vpp	0.8			V	Peak to peak voltage
Symmetry	SYM	40		60	%	GND Level

5. OUTLINE DRAWING

[TOP VIEW]

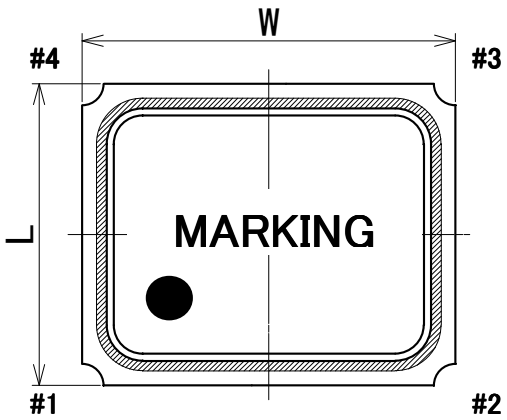

Marking
TBD

Material
Ceramics (base)
Au coated nickel (terminal)
Fe-Ni-Co (lid)

[SIDE VIEW]

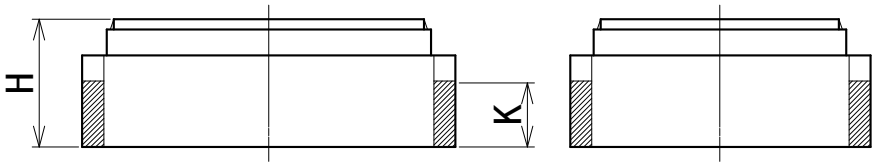

[BOTTOM VIEW]

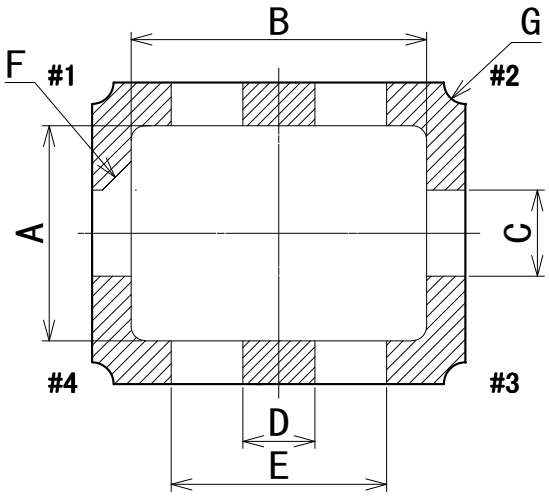

CONNECTION

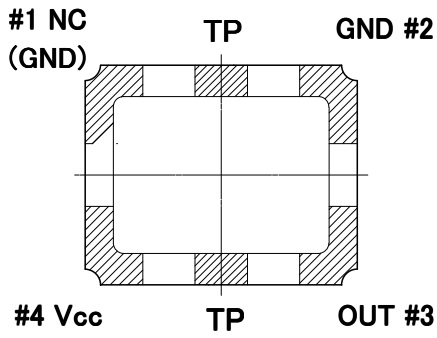

BOTTOM VIEW

(unit : mm)

DIM.	MIN.	TYP.	MAX.	DIM.	MIN.	TYP.	MAX.
W	2.30	2.50	2.70	D	0.40	0.50	0.60
L	1.80	2.00	2.20	E	1.35	1.50	1.65
H	0.70	0.80	0.90	F	---	C0.2	---
A	1.35	1.50	1.65	G	---	R0.15	---
B	1.95	2.10	2.25	K	---	0.45	---
C	0.50	0.60	0.70				

6. CONNECTION

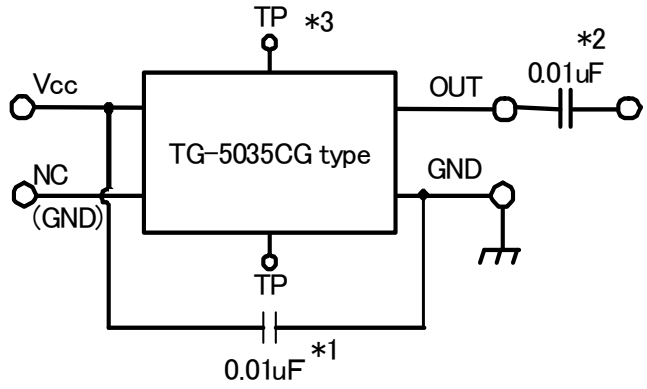

***1 Please connect capacitor(recommendation:0.01 μF) between "Vcc" and "GND" terminal.**
***2 Please connect capacitor(recommendation:0.01 μF) between "OUT" terminal and load.**
***3 Do not connect "TP" terminal.**
***4 This product has one chip LSI. Do not supply over +4.5V or negative voltage under −0.3V to "Vcc" terminal. Do not supply over Vcc+0.3V or negative voltage under −0.3V to "NC" terminal. Do not supply any voltages to "OUT" terminal.**
***5 Do not supply any voltages in any way which differs from the above connection figure.**
***6 Please make the NC pin GND connection or OPEN connection.**

7. Recommended soldering pattern

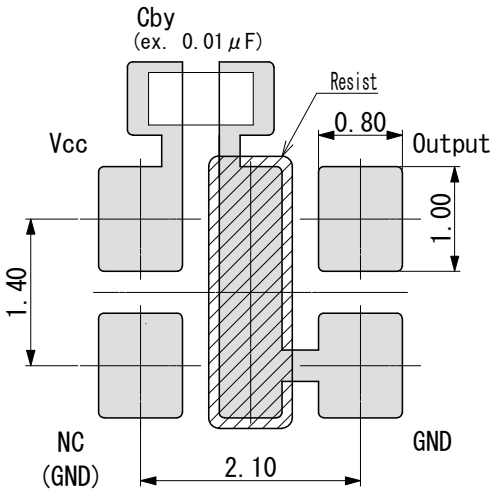

Except for this recommended soldering pattern, please contact us for inquiries.