Kirisun Communications Co.,Ltd

RECIPIENT

SPECIFICATIONS

P/N : **X1G003831000100**

MODEL : **TG-5035CE-13N**
19.2MHz

SPEC. No. : **A13-358-0B**

DATE: **Jul. 25. 2013**

SEIKO EPSON CORPORATION

8548 Naka-minowa
Minowa-machi Kamiina-gun
Nagano-ken
399-4696 Japan

CHECKED H.Koike / TD Production Engineering Department Manager
Hideki Koike

CHECKED A. Kakumae / TD Production Engineering Department Senior Staff
Atsushi Kakumae

CHECKED Y. Hiraizumi / TD・CS Quality Assurance Department Manager
Yasushi Hiraizumi

PREPARED Yamada / TD・CS Quality Assurance Department Senior Staff
Masatoshi Yamada

SPECIFICATIONS

1. Application

This document is applicable to the temperature compensated crystal oscillator (TCXO) that is delivered to **Kirisun Communications Co.,Ltd** from SEIKO EPSON Corp.

This product is compliant with RoHS Directive.

This Product supplied (and any technical information furnished, if any) by SEIKO EPSON Corporation shall not be used for the development and manufacture of weapon of mass destruction or for other military purposes.
Making available such products and technology to any third party who may use such products or technologies for the said purposes are also prohibited.

This product listed here is designed as components or parts for electronics equipment in general consumer use.
We do not expect that any of these products would be incorporated or otherwise used as a component or part for the equipment, which requires an extra high reliability, such as satellite, rocket and other space systems, and medical equipment, the functional purpose of which is to keep life.

2. Model

The product No. of this crystal oscillator unit is **X1G003831000100**.
The model is **TG-5035CE-13N** (TCXO)

3. Packing

It is subject to the packing standard of SEIKO EPSON Corp.

4. Amendment and abolishment

Amendment and/or abolishment of this specification are subject to the agreement of both parties.

5. Contents

Item No.	Item	Page
[1]	Characteristics	2
[2]	Absolute maximum ratings	2
[3]	Operating range	2
[4]	Frequency characteristics	3
[5]	Electrical characteristics	3
[6]	Test circuit	4
[7]	Environmental and mechanical characteristics	5
[8]	Dimensions and marking layout	6
[9]	Recommendable patterning	7
[10]	Handling Precautions	8

6. MSL

Level : 2a

[1] Characteristics

- Lead Free Reflowable and ultra small SMD(3.2 × 2.5 × 0.9 mm).
- Using the heat-resisting type AT cut quartz crystal allows almost the same temperature soldering as universal SMD IC.
- Operating supply voltage: $V_{CC}1$: 1.80V / $V_{CC}2$: 2.85V.

[2] Absolute maximum ratings

Parameter	Symbol	Value	Unit	Note
Supply voltage	V_{CC}-GND	-0.3 to 4.5	V	
Storage temperature range	T_stg	-40 to +85	°C	

[3] Operating range

Parameter		Symbol	Value			Unit	Note
			Min.	Typ.	Max.		
Power voltage		$V_{CC}1$	1.70	1.80	1.90	V	
		$V_{CC}2$	2.70	2.85	3.00	V	
Power voltage		GND	0.0	0.0	0.0	V	
Operating temperature range		T_use	-30	+25	+85	°C	
Output load 1		Load_R	4.5	5.0	5.5	kΩ	
		Load_C	36	40	44	pF	
	DC-cut capacitor	C_C	0.01			µF	
Output load 2		Load_R	9	10	11	kΩ	
		Load_C	9	10	11	pF	
	DC-cut capacitor	C_C	0.01			µF	

DC-cut capacitor is not included in our TCXO. Please insert DC-cut capacitor (0.01uF Min.) in output line.

[4] Frequency characteristics

1) Output frequency 19.200000 MHz

2) Frequency characteristics

(Condition : V_{CC}=1.80V/2.85V, Load1 5kΩ//40pF(DC cut), Load2 10kΩ//0pF(DC cut), T_use =+25 °C)

Parameter	Symbol	Value	Unit	Note
Frequency tolerance	f_tol(osc)	± 2.0 Max. *1	$\times 10^{-6}$	T_use = +25 °C ± 2 °C Reflow cycle : 2time *2
Frequency / Temperature characteristics	fo-Tc	± 0.5 Max.	$\times 10^{-6}$	T_use = -30 °C to +80 °C (Based on frequency at +25 °C)
Frequency / Temperature change	fo-Tc /°C	± 0.05 Max.	$\times 10^{-6}$/°C	T_use = -10 °C to +60 °C *3
		± 0.10 Max.		T_use = -30 °C to +80 °C *3
Frequency drift	-	± 1.60 Max.	$\times 10^{-6}$/s	T_use = -30 °C to +80 °C *4
Frequency / Load coefficient	fo-Load	± 0.2 Max.	$\times 10^{-6}$	Load : ± 10%each T_use = -30 °C to +80 °C
Frequency / Voltage coefficient	fo-V_{CC}	± 0.2 Max.	$\times 10^{-6}$	V_{CC}: ± 5% T_use = -30 °C to +80 °C
Frequency aging	f_age	± 0.7 Max.	$\times 10^{-6}$	first year

*1 Include initial frequency tolerance and frequency deviation after reflow cycles.

*2 Measurement of frequency deviation is made 24h after reflow soldering.

*3 Use temperature gradients of 0.1 ℃/s when measu ring

*4 Use temperature gradients of 0.032 ℃/s when mea suring on -10 ℃ to +60 ℃,
Use temperature gradients of 0.016 ℃/s when meas uring on -30 ℃ to -10 ℃, +60 ℃ to +85 ℃

[5] Electrical characteristics

(Condition : V_{CC}=1.80V/2.85V, Load1 5kΩ//40pF(DC cut), Load2 10kΩ//0pF(DC cut), T_use =+25 °C)

Parameter	Symbol	Value			Unit	Note
		Min.	Typ.	Max.		
Current consumption	I_{CC}	-	1.20-	1.50	mA	Load1 5kΩ // 40pF
		-	1.75-	1.85		Load1 10kΩ / /10pF
Output level	V_{PP}	0.8	-	1.5	V	Peak to peak voltage
Symmetry	SYM	40	-	60	%	GND Level
Harmonics	-	-	-	-5	dBc	
Start up time	T_str	-	-	2.0	msec	Until freqency has been reached within ±0.5 ppm of final freqency.
		-	-	2.0		Until output signal has been reached min90% of final amp.
SSB Phase noise	L(f)	-	-95	-90	dBc /Hz	Offset:10 Hz
		-	-118	-115		Offset:100 Hz
		-	-140	-137		Offset:1 kHz
		-	-151	-148		Offset:10 kHz
		-	-152	-150		Offset:100 kHz

[6] Test circuit

1) Output Load : 5 kΩ//40 pF, 10 kΩ//10 pF

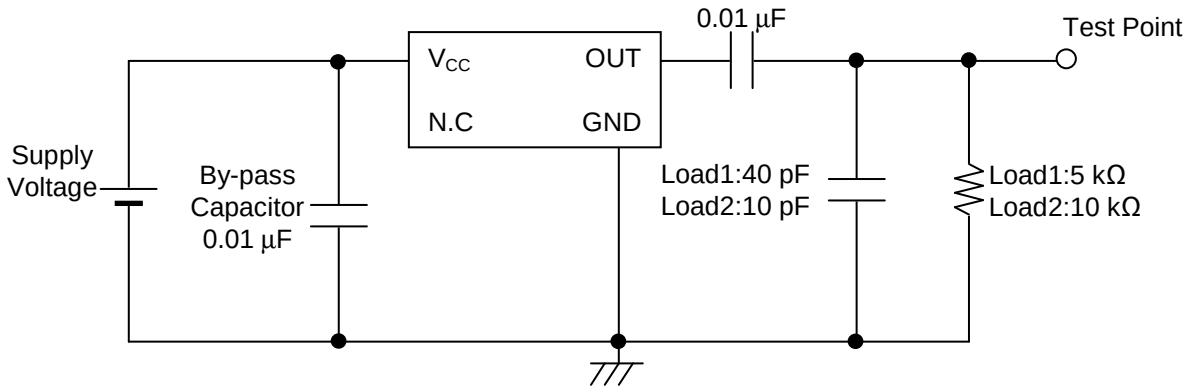

2) Current consumption

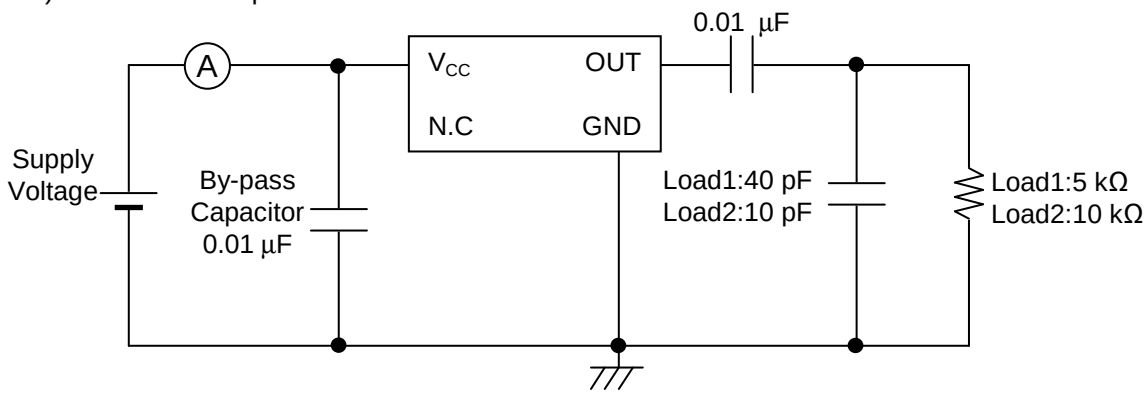

3) Conditions

1. Oscilloscope: Impedance Min. 1 MΩ
   Input capacitance Max. 10 pF
   Band width Min. 300 MHz
   Impossible to measure both frequency and wave form at the same time.(In case of using oscilloscope's amplifier output, possible to measure both at the same time.)
2. CL includes probe capacitance.
3. A capacitor (By-pass:0.01 μF) is placed between V_{CC} and GND, and closely to TCXO.
4. Use the current meter whose internal impedance value is small.
5. Power Supply
   Impedance of power supply should be as lowest as possible.
6. GND should apply one point earth.

[7] Environmental and mechanical characteristics

(The company evaluation condition. we evaluate it by the following examination item and examination condition.)

No.	Item	Value *1 Freq. Tolerance [1×10^{-6}] *2 Electrical characteristics	Test method
1	High temp. storage *3	± 2.0	+85 °C × 1000 h
2	Low temp. storage *3	± 2.0	-40 ℃ × 1000 h
3	High temp. with humidity	± 2.0	+85 °C × 85%RH × 1000 h
4	Temp. cycle *3	± 2.0	-40 ℃ to +85 ℃ (30 min × 100 cycle/each)
5	Resistance to Soldering heat (Reflow characteristics)	± 1.0	Reflow furnace with the condition 3 times
6	Drop	± 2.0	150g dummy jig (SEIKO EPSON Standard) drop from 1500 mm height on the concrete 6 directions 3 times.
7	Vibration	± 2.0	10 Hz to 55 Hz amplitude 0.75 mm 55 Hz to 500 Hz acceleration 98 m/s^2 10 Hz → 500 Hz → 10 Hz 15 min / cycle 6 h (2 h × 3 directions)

Notes

1.*1 each test is independent.

2.*2 measuring 2 h to 24 h later leaving in room temperature after each test.

3.*3 Initial value shall be measured after 24 h storage at room temperature Pre-treatment

Pre-treatment : Bake (+125°C x 24 h) → Moisture soak (+85°C x 60 % x 168 h) → reflow (3 times)

Reflow condition (follow to IPC / JEDEC J-STD-020C)

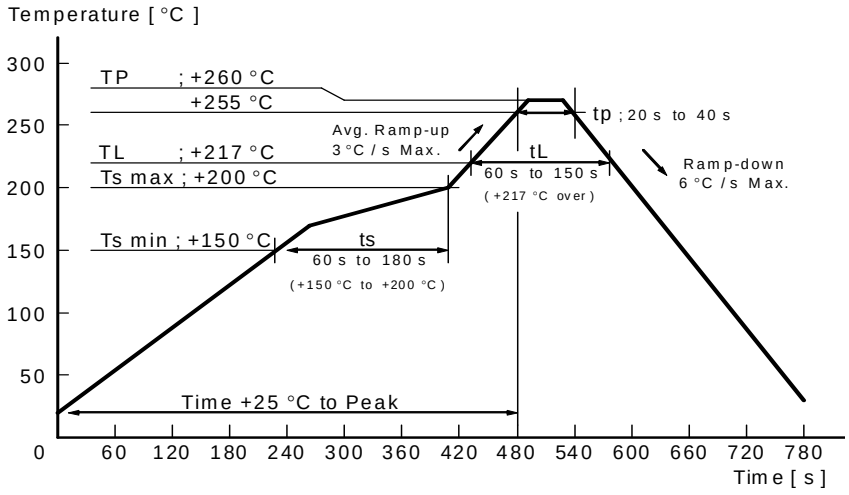

[8] Dimensions And Marking Layout

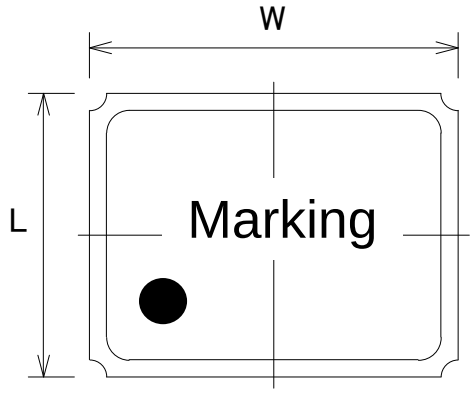

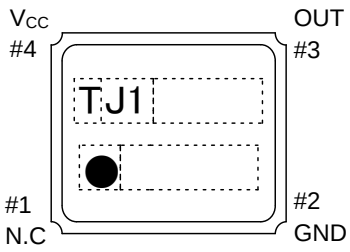

Marking

(1) 1Pin Mark
(2) Arbitrary marking area
(3) T:(ETC) Mark
(4) TCXO Model ID「J1」
(5) TCXO Lot No.
(4 figure)

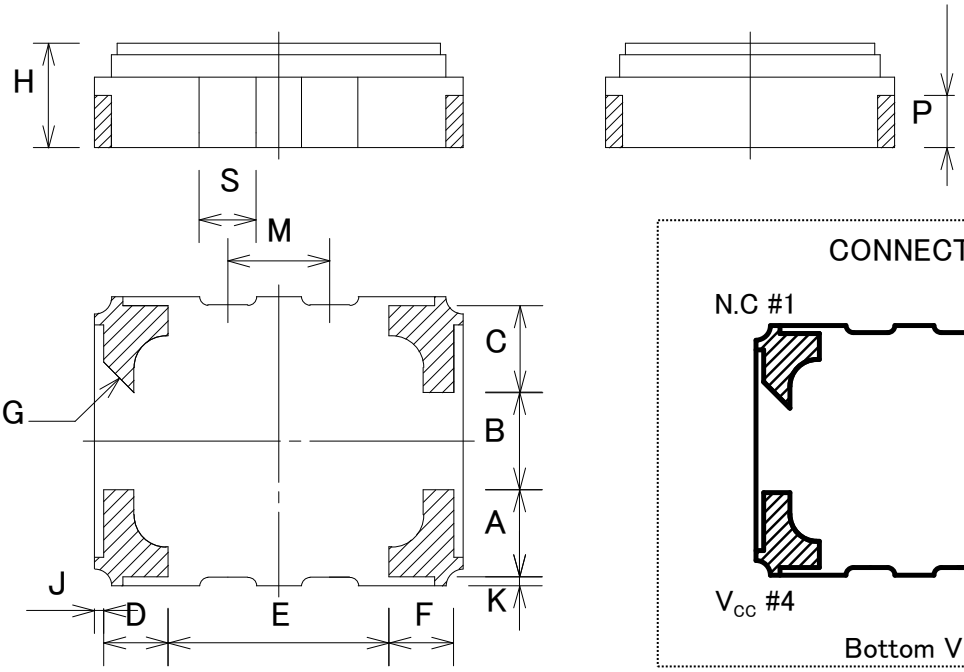

Material
Base : Ceramics
Terminal : W-Ni-Au
Lid : Fe-Ni-Co

(unit : mm)

DIM.	MIN.	TYP.	MAX.	DIM.	MIN.	TYP.	MAX.
W	3.05	3.20	3.35	F	-	0.57	-
L	2.35	2.50	2.65	G	-	C0.27	-
H	0.80	0.90	1.00	J	-	0.08	-
A	-	0.765	-	K	-	0.08	-
B	0.76	0.86	0.96	M	0.80	0.90	1.00
C	-	0.765	-	P	0.41	0.46	0.51
D	-	0.57	-	Q	-	0.13	-
E	1.85	1.95	2.05	S	0.40	0.50	0.60

[9] Recommendable patterning

For actual design work, please consider optimum condition together with mounting density, reliability of soldering and mount ability etc.

Do not design any patterns except GND on the shaded area.

Soldering position

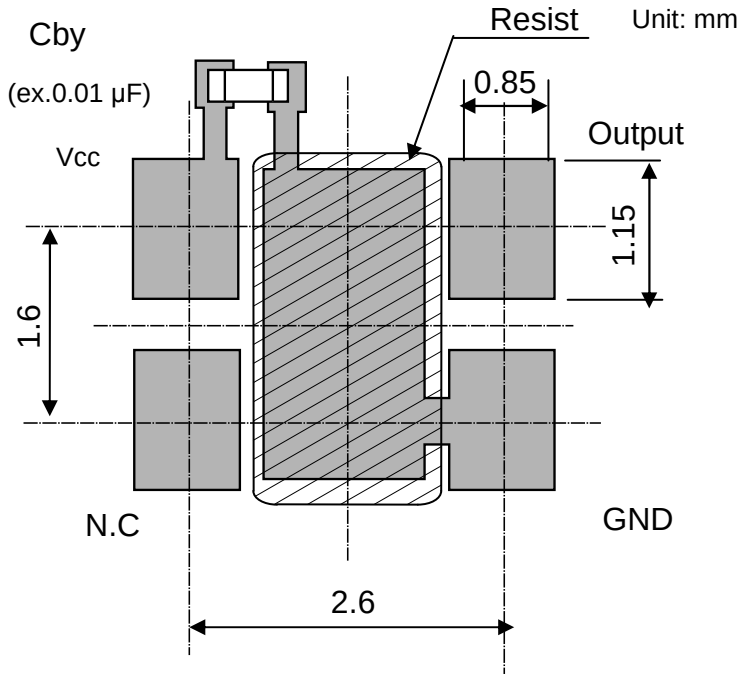

[10] Handling precautions

Prior to using this product, please carefully read the section entitled “Precautions” on our Web site (http://www5.epsondevice.com/en/quartz/tech/precaution/) for instructions on how to handle and use the product properly to ensure optimal performance of the product in your equipment. Before using the product under any conditions other than those specified therein, please consult with us to verify and confirm that the performance of the product will not be negatively affected by use under such conditions.

In addition to the foregoing precautions, in order to avoid the deteriorating performance of the product, we strongly recommend that you DO NOT use the product under ANY of the following conditions:

(1) Mounting the product on a board using water-soluble solder flux and using the product without removing the residue of the flux completely from the board. The residue of such flux that is soluble in water or water-soluble cleaning agent, especially the residues which contains active halogens, will negatively affect the performance and reliability of the product.
(2) Using the product in any manner that will result in any shock or impact to the product.
(3) Using the product in places where the product is exposed to water, chemicals, organic solvent, sunlight, dust, corrosive gasses, or other materials.
(4) Using the product in places where the product is exposed to static electricity or electromagnetic waves.
(5) Applying ultrasonic cleaning without advance verification and confirmation that the product will not be affected by such a cleaning process, because it may damage the crystal, IC and/or metal line of the product.
(6) Touching the IC surface with tweezers or other hard materials directly.
(7) Using the product under any other conditions that may negatively affect the performance and/or reliability of the product.
(8) Using the product with power line ripple exceeding 200 mV(p-p) level.

Should any customer use the product in any manner contrary to the precautions and/or advice herein, such use shall be done at the customer’s own risk.

TAPING SPECIFICATION

Ⅰ. Application

This standard will apply to 3.2×2.5 Ceramic package.

Spec：CE package

Ⅱ. Contents

Item No.	Item	Page
〔1〕	Taping specification	1 to 2
〔2〕	Inner carton	3
〔3〕	Shipping carton	
〔4〕	Marking	4
〔5〕	Quantity	
〔6〕	Storage environment	
〔7〕	Handling	

〔1〕 Taping specification

Subject to EIA-481& IEC-60286

(1) Tape dimensions

Material of the carrier tape : PS

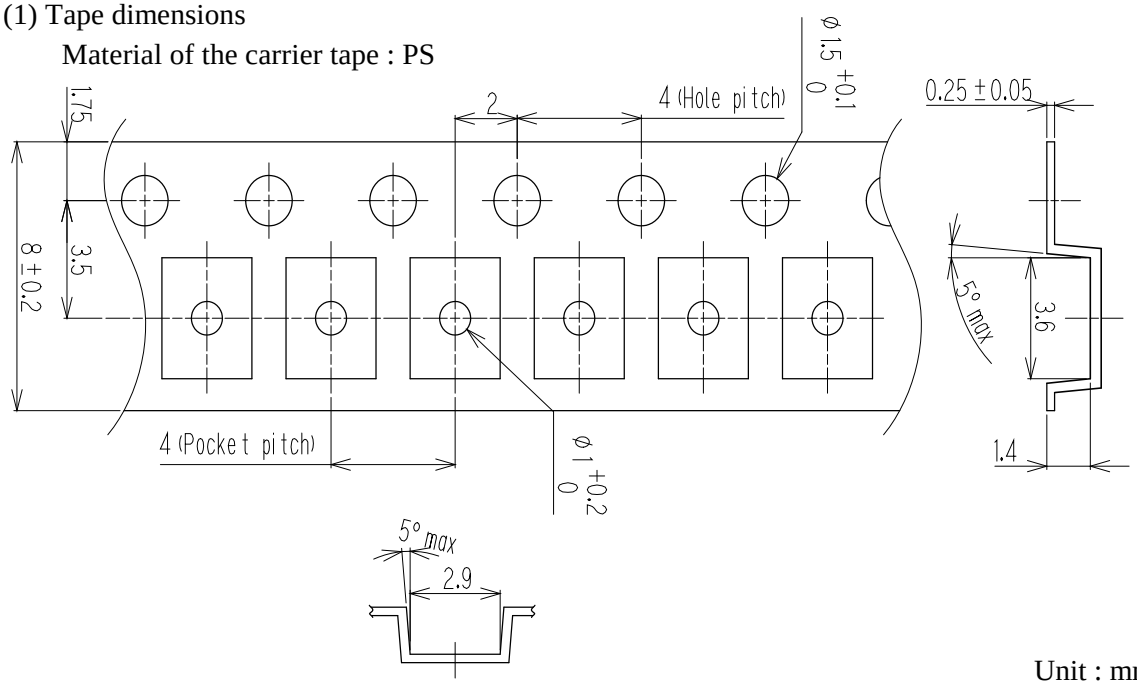

Unit : mm

The radius of each corner is 0.3mm max.

10 feeding holes pitches cumulative tolerance on tape is +/-0.2mm max.

(2) Reel dimensions

Material of the reel : PS

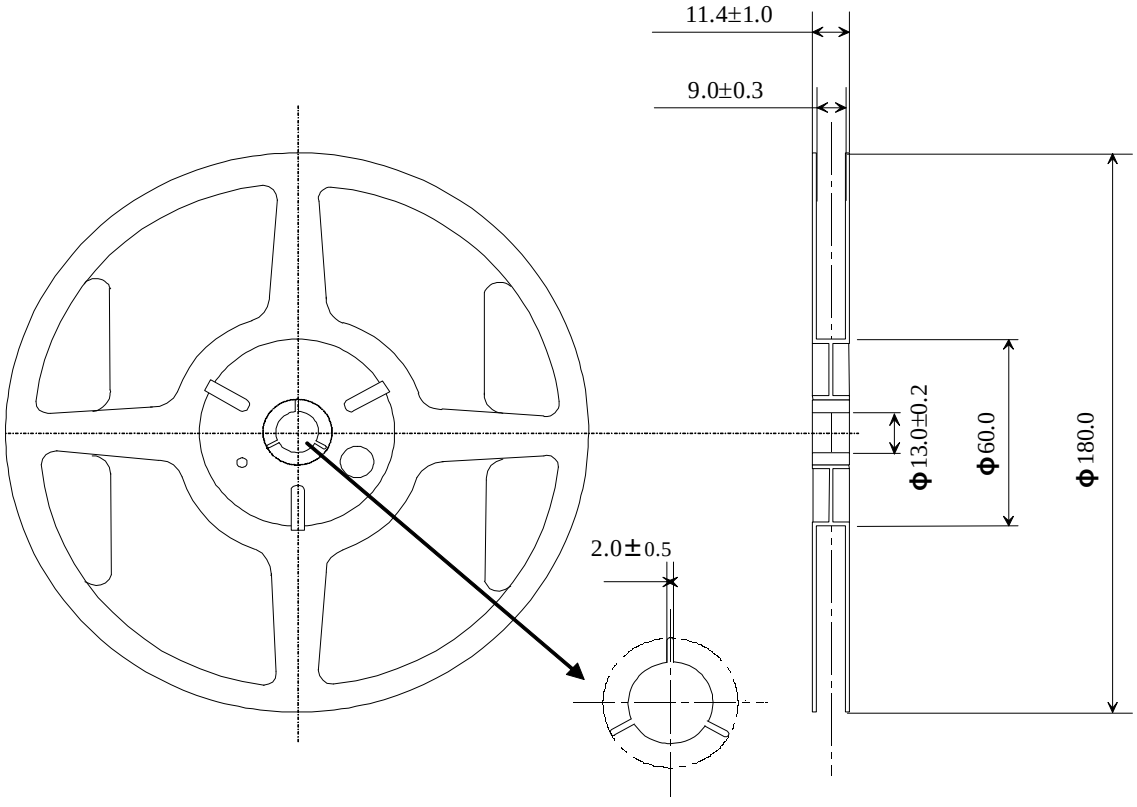

Unit : mm

Tolerances for all measurements are ±0.1 mm unless otherwise stated.

(3) Packing

①Tape & reel

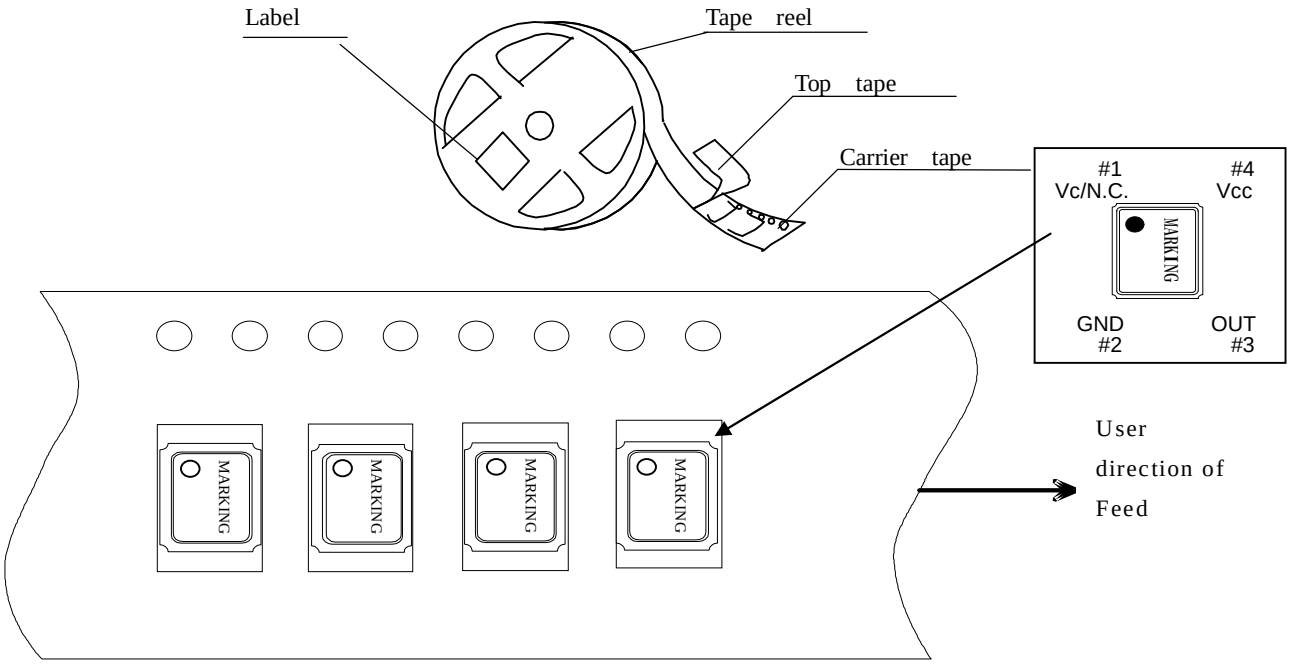

②Start & end point

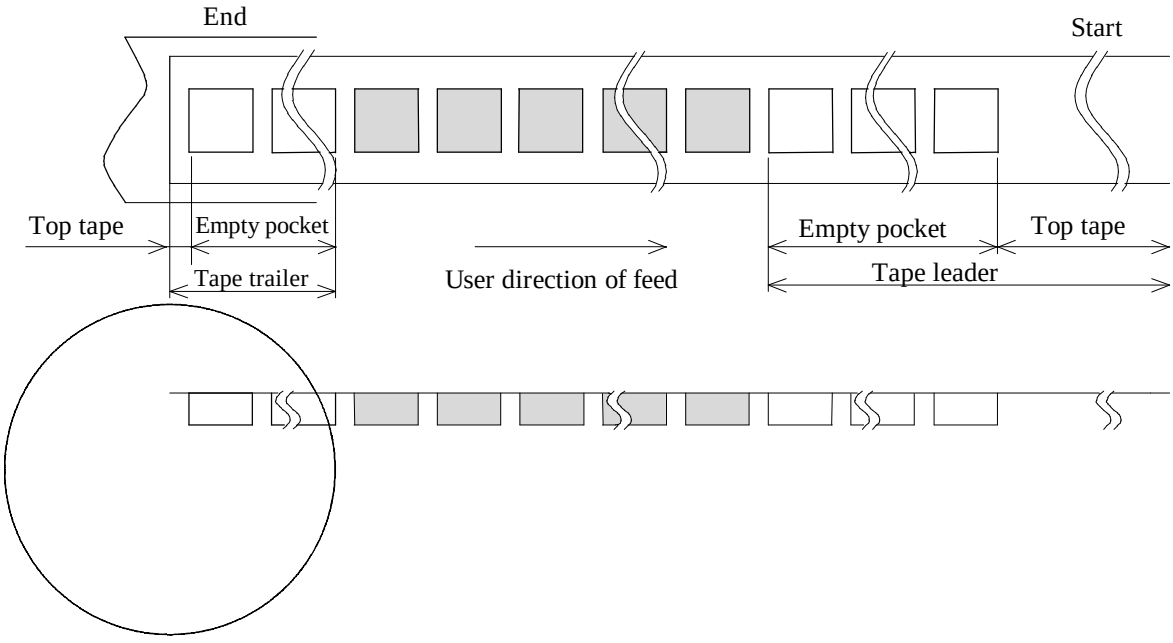

Item		Empty space
Tape leader	Top tape	Min. 200 mm
	Empty pocket	Min. 150 mm
Tape trailer	Top tape	Min. 50 mm
	Empty pocket	Min. 150 mm

〔2〕 Inner carton

a) Packing to alumi laminate bag

The reel is packed in the vacuum with the alumi laminate bag.

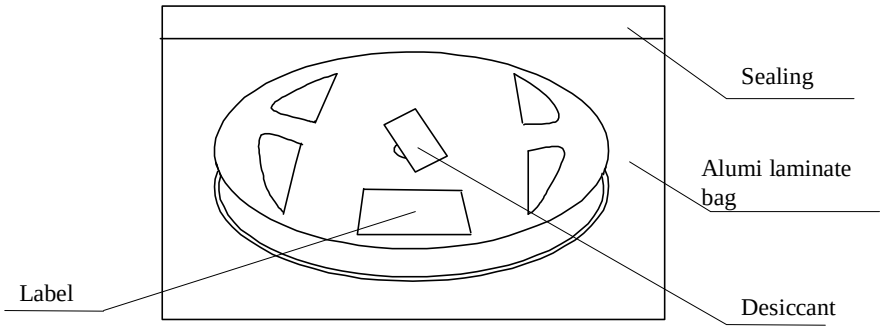

b) Packing to inner carton

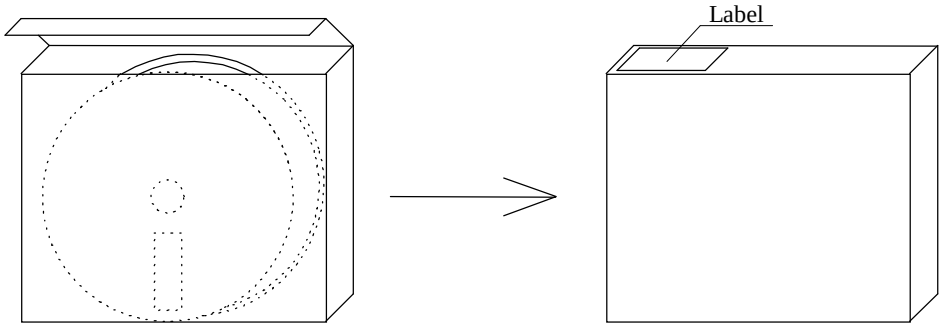

〔3〕 Shipping carton

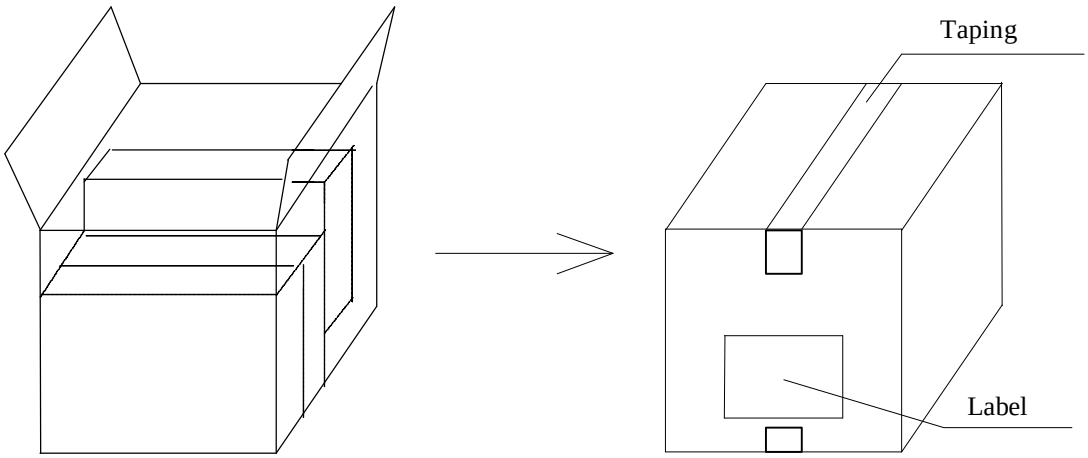

〔4〕 Marking

(1) Reel marking

- Reel marking shall consist of :

1) Parts name
2) Quantity
3) Manufacturing date or symbol
4) Manufacturer's name or symbol
5) Others (if necessary)
6) Pb-Free LF / Halogen Free HF

Exampl of label

(2) Inner carton marking

- Same as reel marking.

(3) Shipping carton marking

- Shipping carton marking shall consist of :

1) Parts name
2) Quantity

〔5〕 Quantity

- Max : 2000 pcs/reel Min : 500 pcs/reel

〔6〕 Storage environment

(1) To storage the reel at 15 °C to 35 °C, 25 %RH to 85 %RH of humidity.
(2) To open the packing just before using.
(3) Not to expose the sun.
(4) Not to storage with some erosive chemicals.
(5) Nothing is allowed to put on the reel or carton to prevent mechanical damage.

〔7〕 Handling

- To handle with care to prevent the damage of tape, reel and products.

EPSON
EXCEED YOUR VISION

登録 REGIST	
版	年月日 DATE
1	11.04.22
2	
3	
4	
5	
6	
7	
8	
9	
10	
11	
12	
13	
14	
15	
16	

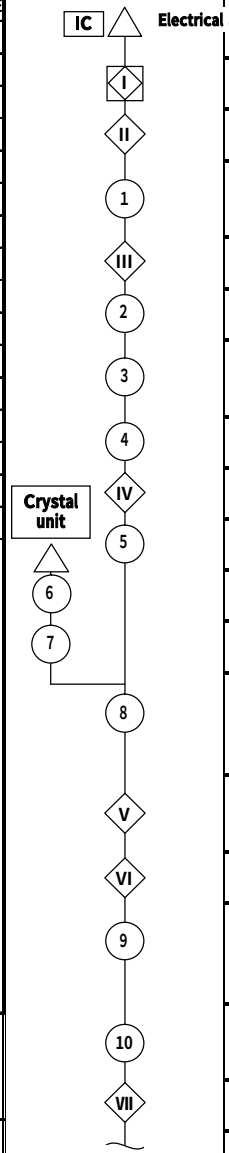

Process	Control item	Check item	Inspection item	Operation: Procedure	Operator	Lot	Sampling rate	Equipment	Record	Disposal of defected parts: In process	Defected parts	Remarks
Incoming inspection			Part name	Inspection procedure	Quality assurance div.	Delivered lot	100%	Visual	Incoming inspection record	—	Return to vender/ Issue a Notice of defective	
			Quantity									
IC appearance inspection			Appearance of IC wafer	IC-001	Producion div.	Wafer	N=10chip	Microscope ×40	Travel sheet	—	Return to vender/ Issue a Notice of defective	
Bump bonding	Number of tool shots			IC-002	Producion div.	Wafer	100%	Built-in counter	Tool change check	changed capillary	Isolation the Product/ Issue a Notice of defective	
		Stage temperature					Daily	Thermometer	Daily check sheet	Production halt/ Process investigation		
Test of bump shear strength			Bump dimension	IC-002	Producion div.	Wafer	N=4bump at changed capillary	Measuring Microscope	Travel sheet	Process investigation	Isolation the Product/ Issue a Notice of defective	
			Shear strength					Bond tester	Xber-R Chart			
To paste Tape on IC wafer		Number of cutter shots		IC-003	Producion div.	Wafer	Daily	Built-in counter	Daily check sheet	Change cutter/ Work guidance	—	
Dicing	Abrasion loss of Blade			IC-004	Producion div.	Wafer	Wafer	Built-in measure	Tool change check	Change blade	Isolation the Product/ Issue a Notice of defective	
		Resistivity of cutting water					Daily	Built-in measure	Travel sheet	Production halt/ Process investigation		
To clean IC wafer		Resistivity of cleaning water		IC-006	Producion div.	Wafer	Daily	Built-in measure	Daily check sheet	Production halt/ Process investigation	Isolation the Product/ Issue a Notice of defective	
Appearance inspection			Bonding condition	IC-002	Producion div.	Wafer	N=10chip	Microscope ×40	Travel sheet	Production halt/ Process investigation	Isolation the Product/ Issue a Notice of defective	
			Dicing condition	IC-004								
UV irradiation		UV intensity		IC-007	Producion div.	Wafer	Daily	UV radiometer	Daily check sheet	Change Metal halide lamp	Isolation the Product/ Issue a Notice of defective	
Blow & Vacuum		Blow,Vacuum motion		IC-010	Producion div.	Product lot	Daily	Visual	Daily check sheet	Production halt/ Process investigation	Isolation the Product/ Issue a Notice of defective	
Plasma etching		Flow of Argon		IC-011	Producion div.	Product lot	Daily	Built-in flowmeter	Daily check sheet	Production halt/ Process investigation	Isolation the Product/ Issue a Notice of defective	
		Flow of oxygen										
Flip chip bonding	Number of tool shots			IC-016	Producion div.	Product lot	100%	Built-in counter	Tool change check	Clean the bonding too	Isolation the Product/ Issue a Notice of defective	
		Stage temperature					Daily	Thermometer	Daily check sheet	Production halt/ Process investigation		
			Bonding impedance				100%	Built-in measure	Travel sheet	(Process investigation	Scrap	
Inspection of die share strength			Bump dimension	IC-016	Producion div.	Product lot	N=6bump	Measuring Microscope	Travel sheet	Production halt/ Process investigation	Isolation the Product/ Issue a Notice of defective	
			Shear strength				N=2pcs	Bond tester	Xber-R Chart			
Appearance inspection			Flipchip bonding condition	IC-016	Producion div.	Product lot	N=2pcs	Microscope ×15	Travel sheet	Process investigation /Alignment	Scrap	
Under fill filling	Chip coat storage temperature			IC-020	Producion div.	Product lot	Daily	Thermometer	Daily check sheet	Scrap the resin	—	
	Pot life time						100%	Built-in measure	Tool change check	Change resin	Isolation the Product/ Issue a Notice of defective	
		Stage temperature					Daily	Thermometer	Daily check sheet	Production halt/ Process investigation		
Curing	Curing time			IC-022	Producion div.	Product lot	Product lot	Timer	Travel sheet	Work guidance	Scrap	
		Chamber temperature					Daily	Thermometer	Daily check sheet	Production halt/ Process investigation		
Appearance inspection			Under fill condition	IC-020	Producion div.	Product lot	100%	Microscope ×15	Travel sheet	Process investigation	Scrap	
			Defective rate				100%	PC	P Chart		Issue a Notice of defective	

承認 APP.	照査 CHK'D	作成 DRAW
Y.SHISHIDO		T.MATSUDA

改版記事 DESCRIPTION

TiTle	QC Process Chart of TG-5035CE Series			
Date	22nd. Apr. 2011	Document No.	TG5035CE-00-AFE	1/2

Flow chart	Process	Control item	Check item	Inspection item	Operation						Disposal of defected parts		Remarks
					Procedure	Operator	Lot	Sampling rate	Equipment	Record	In process	Defected parts	
11	Reflow		Temperature profile		IC-031	Producion div.	Product lot	Daily	Thermometer	Daily check sheet	Production halt/ Process investigation	Isolation the Product/ Issue a Notice of defective	
VIII	Frequency inspection at high temperature		Stage temperature		IC-032	Producion div.	Product lot	Daily	Thermometer	Daily check sheet	Production halt/ Process investigation	Isolation the Product/ Issue a Notice of defective	
				Frequency at high temperature				N=306pcs	Frequency counter	Tool change check sheet	Process investigation		
IX	Temperature characteristics adjustmet and inspection		Stage temperature		IC-054	Producion div.	Product lot	Daily	Thermometer	Daily check sheet	Production halt/ Process investigation	Isolation the Product/ Issue a Notice of defective	
				Temperature characteristics				100%	Temperature characteristic measurement	Travel sheet	(Process investigation	Re-work	
				Defective rate				Product lot	PC	P Chart	Production halt/ Process investigation	Isolation the Product/ Issue a Notice of defective	
X	Final inspection			Dimension	IC-045	Quality assurance div.	Product lot	N=3pcs	Calipers	Inspection record Travel sheet	Process investigation	Return to Production div./ Issue a Notice of defective	
				Appearance				AQL 1.0%	Amplifier				
				Part name, Quantity				N=3pcs	Amplifier				
				Frequency tolerance				AQL 0.4%	Frequency counter				
				DC supply current				AQL 0.4%	Multimeter				
			Temperature characteristics					AQL 0.4%	Inspection record				
XI	electrical characteristics inspection			Frequency tolerance	IC-043	Producion div.	Product lot	100%	Frequency counter	Travel sheet	Process investigation	Issue a Notice of defective	
				RF output					Oscilloscope				
				Duty cycle									
				DC supply current					Multimeter				
			Frequency control range						Frequency counter				
			Circuit frequency stabilityvs. supply voltage										
12	Marking			Marking contents	IC-043	Producion div.	Product lot	Product lot	Built-in word recongnition system	Travel sheet	Production halt/ Process investigation	Isolation the Product/ Issue a Notice of defective	
13	Taping		Peeling strength		IC-043	Producion div.	Packing lot	Daily	Peeling tester	Daily check sheet	Process investigation /Adjust the heater temperature	Isolation the Product/ Issue a Notice of defective	
XII	Taping inspection			Direction	IC-043	Quality assurance div.	Packing lot	N=3pcs	Amplifier	Inspection record	Production halt/ Process investigation	Return to Production div./ Issue a Notice of defective	
				Marking contents									
	Packing and shipping			Quantity	Packing Instruction	Production control div.	Shipping lot	100%	Visual	Shipping record	—	Return to Production div.	

改版記事 DESCRIPTION

TiTle	QC Process Chart of TG-5035CE Series			
Date	22nd. Apr. 2011	Document No.	TG5035CE-00-AFE	2/2

TG-5035CE　Structure

Section

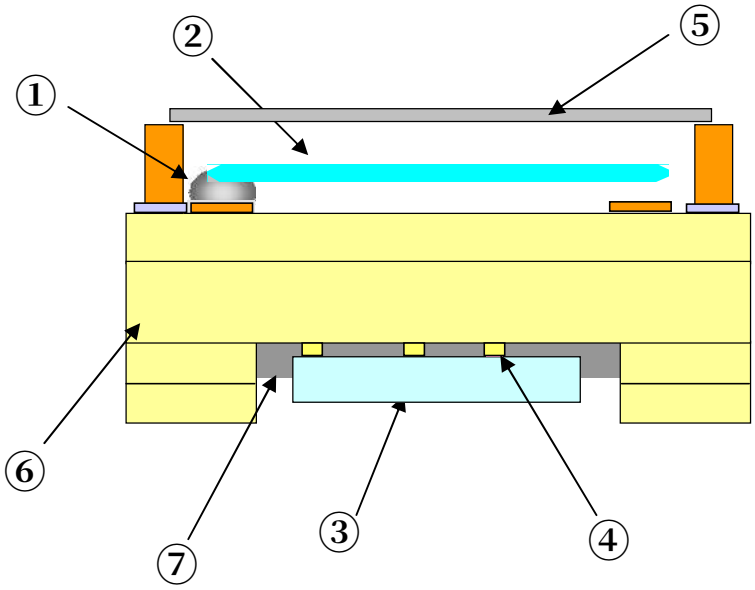

material Table		
material		Specification
①	Adhesives	Adhesives
②	XTAL blank	ATCut
③	IC	CMOS
④	FC bump	Au bump wire
⑤	Lid	Kovar
⑥	PKG	Ceramic
⑦	UF	Potting resin

TCE-CO-046-01-01		
MGR.	CHK.	ENG.
Y.Shishido		A.Kakumae

RELIABILITY TEST DATA

To

Product Name : TG-50xxCE series

The Company evaluation condition

We evaluate environmental and mechanical characteristics by the following test condition . **OUT-11-0050**

No.	ITEM	TEST CONDITIONS	VALUE *1		TEST Qty [n]	FAIL Qty [n]
			Δ f / f *2 [1 × 10^{-6}]	Electrical characteristics		
1	High temperature storage	+85 °C × 1 000 h	*3 ± 2.0	Satisfy output level after test	22	0
2	Low temperature storage	-40 °C × 1 000 h	*3 ± 2.0		22	0
3	High Temperature with Humidity	+85 ± 2 °C × 85 ± 5 %RH × 1 000 h	*3 ± 2.0		22	0
4	Temperature cycle	-40 °C ⇔ +85 °C 30 min at each temp. 100 cycles	*3 ± 2.0		22	0
5	Drop	150g dummy jig (Epson Standard) drop from 1500 mm height on the concrete 6 directions 3 times.	*3 ± 2.0		22	0
6	Resistance to soldering heat	Convection reflow soldering furnace (3 times)	± 1.0		22	0
7	Vibration	10 Hz to 55 Hz amplitude 0.75 mm 55 Hz to 500 Hz acceleration 98 m/s^2 10 Hz → 500 Hz → 10 Hz 15 min / cycle 6 h (2 h × 3 directions)	*3 ± 2.0		22	0

Notes

1. *1 Each test done independently.
2. *2 Measuring 2 h to 24 h later leaving in room temperature after each test.
3. *3 Initial value shall be measured after 24 h storage at room temperature Pre-treatment
   Pre-treatment : Bake (+125 ℃ × 24 h) →Moisture soak (+85 ℃ × 60 % × 168 h) →reflow (3 times)

QD Business Unit
Production Management Div.

signature Y. Shirahido

Qualification Data

Product Name : TG-5035CE

Δ f / f

OUT-11-0050

1. High temp. storage
+85 ℃ × 1 000 h

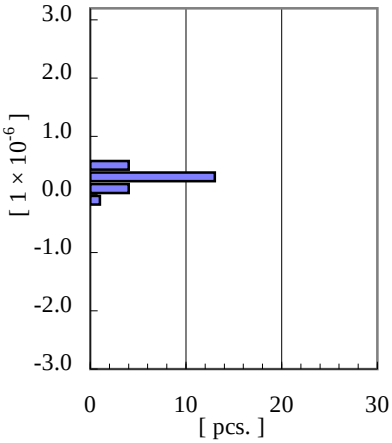

2. Low temp. storage
-40 ℃ × 1 000 h

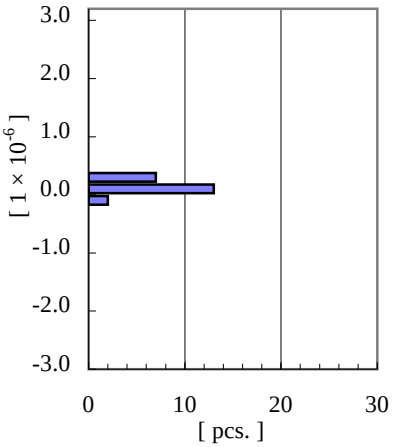

3. Temp. humidity bias
+85 ℃ × 85 %RH × Spec Bias
× 1 000 h

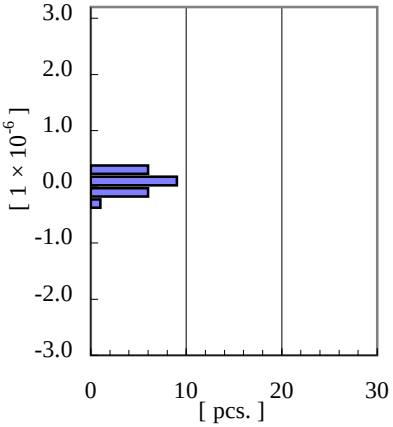

4. Temp. cycle
-55 ℃ ⇔ +125 ℃
100 cycles

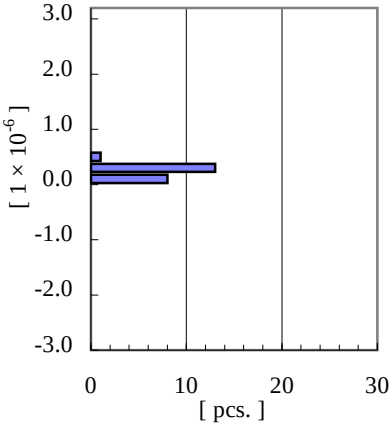

5. Drop
1500 mm × 6dir × 3 times

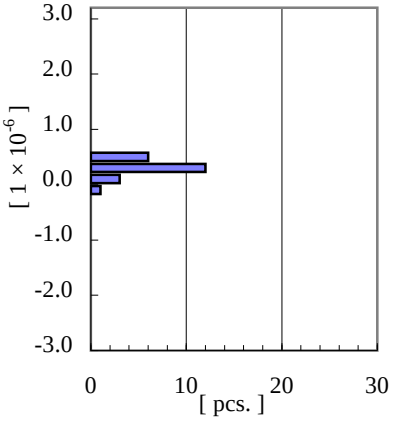

6. Resistance to
soldering heat
Reflow furnace with the
condition 3 times

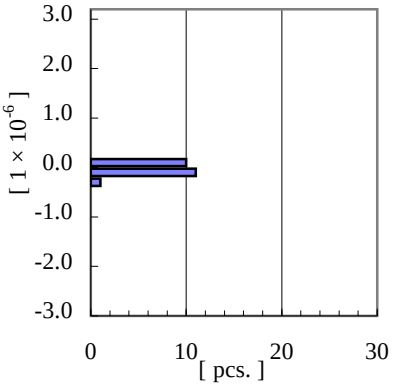

7. Vibration
10 Hz to 55 Hz amplitude 0.75 mm
55 Hz to 500 Hz acceleration 98 m/s^2
15 min / cycle 6 h (2 h ×3 directions)

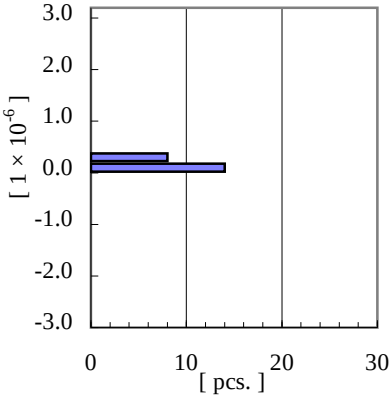

Qualification Data

EPSON
EXCEED YOUR VISION

ST12-142
Jun., 15, 2011

Electro Static Discharge

SEIKO EPSON CORPORATION
TD・CS Quality Assurance Dept.

Product Name :TG-5035xx series

No.	Item	Test term	Test Quy [n]	Result
1	Machine Model	EIAJ ED-4701-1 C111 200 pF, 0 Ω, 1 time ElectroStatic Discharge:±200V	5	OK
2	Human Body Model	EIAJ ED-4701-1 C111A 100 pF,1.5 KΩ, 3 time ElectroStatic Discharge:±2000V	5	OK

Machine Model

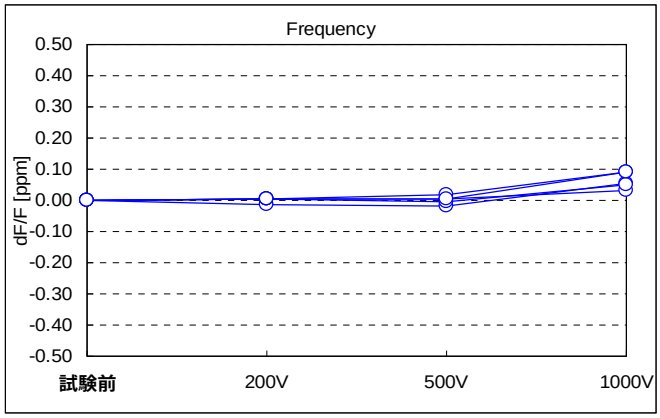

No problem to 200V

Human Body Model

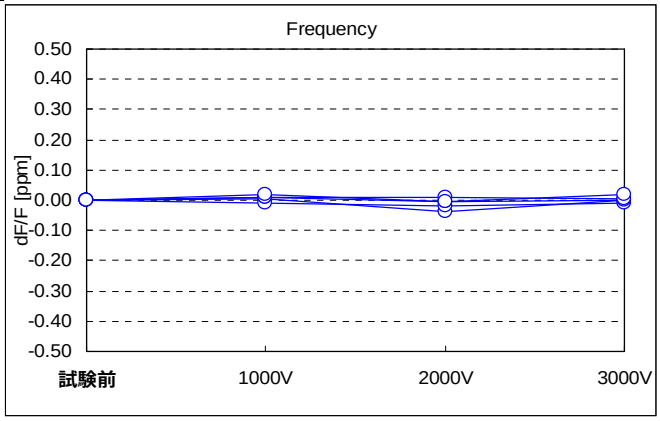

No problem to 2000V