INFORMATION

Product No. : **X1G004211002400**

MODEL : **TG-5006CG-43L 40MHz**

INFO. No. : **A14-710-0S**

DATE : **Sep. 8. 2014**

SEIKO EPSON CORPORATION

8548 Naka-minowa
Minowa-machi Kamiina-gun
Nagano-ken
399-4696 Japan

INTRODUCTION

1. The contents is subject to change without notice.
   Please exchange the specification sheets regarding
   the product's warranty.

2. This sheet is not intended to guarantee or provide
   an approval of implementation of industrial patents.

3. We have prepared this sheet as carefully as possible.
   If you find it incomplete or unsatisfactory in any
   respect, We would welcome your comments.

This product is compliant with RoHS Directive.

This Product supplied (and any technical information furnished, if any) by SEIKO EPSON Corporation shall not be used for the development and manufacture of weapon of mass destruction or for other military purposes.
Making available such products and technology to any third party who may use such products or technologies for the said purposes are also prohibited.

This product listed here is designed as components or parts for electronics equipment in general consumer use.
We do not expect that any of these products would be incorporated or otherwise used as a component or part for the equipment, which requires an extra high reliability, such as satellite, rocket and other space systems, and medical equipment, the functional purpose of which is to keep life.

Model

The product No. of this crystal oscillator unit is **X1G004211002400**.
The model is **TG-5006CG-43L** (TCXO)

Contents

Item No.	Item	Page
[1]	Characteristics	2
[2]	Absolute maximum ratings	2
[3]	Operating range	2
[4]	Frequency characteristics	3
[5]	Electrical characteristics	3
[6]	Test circuit	4
[7]	Environmental and mechanical characteristics	5
[8]	Dimensions and marking layout	6
[9]	Recommendable patterning	7
[10]	Handling Precautions	8

[1] Characteristics

- Lead Free Reflowable and ultra small SMD(2.5 × 2.0 × 0.9 mm).
- Using the heat-resisting type AT cut quartz crystal allows almost the same temperature soldering as universal SMD IC.
- Operating supply voltage: V_{CC} = 1.8 V, 2.5 V, or 3.0 V.

[2] Absolute maximum ratings

Parameter	Symbol	Value	Unit	Note
Supply voltage	V_{CC}-GND	-0.3 to 4.0	V	
Storage temperature range	T_stg	-40 to +90	°C	

[3] Operating range

Parameter		Symbol	Value			Unit	Note
			Min.	Typ.	Max.		
Power voltage		V_{CC}	1.70	-	3.30	V	
		GND	0.0	0.0	0.0	V	
Operating temperature range		T_use	-30	+25	+85	°C	
Output load		Load_R	9	10	11	kΩ	
		Load_C	9	10	11	pF	
	DC-cut capacitor	C_C	0.01			μF	

DC-cut capacitor is not included in our TCXO. Please insert DC-cut capacitor (0.01uF Min.) in output line.

[4] Frequency characteristics

1) Output frequency 40.000000 MHz

2) Frequency characteristics

(Condition : V_{CC} = 1.8 V, 2.5 V, or 3.0 V, Load 10kΩ//10pF(DC cut), T_use =+25 °C)

Parameter	Symbol	Value			Unit	Note
		Min.		Max.		
Frequency tolerance	f_tol(osc)	-1.0	-	+1.0	$\times 10^{-6}$	T_use = +25°C ± 2°C Before Reflow
	f_tol *1	-2.0	-	+2.0	$\times 10^{-6}$	T_use = +25°C ± 2°C Reflow cycle : 2 times *2
Frequency / Temperature characteristics	fo-Tc	-2.0	-	+2.0	$\times 10^{-6}$	T_use = -30°C to +85°C (Based on frequency at +25°C)
Frequency / Load coefficient	fo-Load	-0.2	-	+0.2	$\times 10^{-6}$	Load :10kΩ // 10pF ± 10%each
Frequency / Voltage coefficient	fo-V_{CC}	-0.2	-	+0.2	$\times 10^{-6}$	V_{CC} ± 5%
Frequency aging	f_age	-1.0	-	+1.0	$\times 10^{-6}$	first year T_use =+25°C

*1 Include initial frequency tolerance and frequency deviation after reflow cycles.

*2 Measurement of frequency deviation is made 24h after reflow soldering.

*3 Vcc ± 5% must be in operating supply voltage range (1.7 V to 3.3 V)

[5] Electrical characteristics

(Condition : V_{CC} = 1.8 V, 2.5 V, or 3.0 V, Load 10kΩ//10pF(DC cut), T_use =+25 °C)

Parameter	Symbol	Value			Unit	Note
		Min.	Typ.	Max.		
Current consumption	I_{CC}	-	-	2.0	mA	
Output level	V_{PP}	0.8	-	1.5	V	Peak to peak voltage
Startup time	t_str	-	-	2.0	msec	Until freqency has been reached within ±1 ppm of final freqency.
		-	-	2.0		Until output signal has been reached min90% of final amp.
Symmetry	SYM	40	-	60	%	GND Level
Harmonics	-	-	-	-10	dBc	3rd
		-	-	-15		Other
SSB Phase noise *1	L(f)	-	-	-83	dBc /Hz	Offset:10 Hz
		-	-	-109		Offset:100 Hz
		-	-	-129		Offset:1 kHz
		-	-	-145		Offset:10 kHz
		-	-	-147		Offset:100 kHz
		-	-	-148		Offset:1 MHz

[6] Test circuit

1) Output Load : 10 kΩ//10 pF

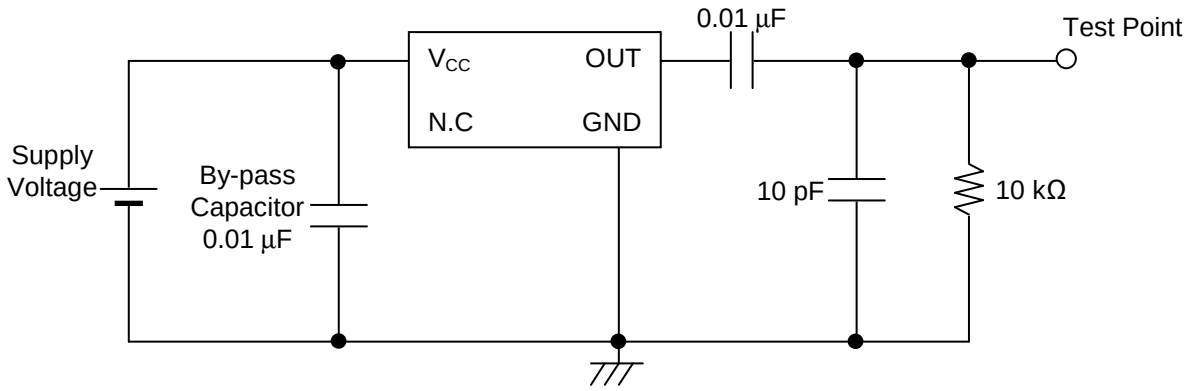

2) Current consumption

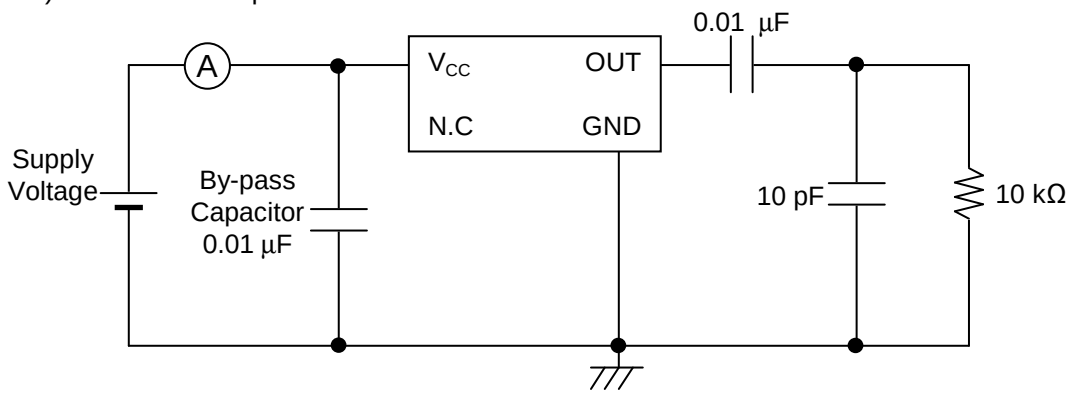

3) Conditions

1. Oscilloscope: Impedance Min. 1 MΩ
   Input capacitance Max. 10 pF
   Band width Min. 300 MHz
   Impossible to measure both frequency and wave form at the same time.(In case of using oscilloscope's amplifier output, possible to measure both at the same time.)
2. CL includes probe capacitance.
3. A capacitor (By-pass:0.01 μF) is placed between V_{CC} and GND, and closely to TCXO.
4. Use the current meter whose internal impedance value is small.
5. Power Supply
   Impedance of power supply should be as lowest as possible.
6. GND should apply one point earth.

[7] Environmental and mechanical characteristics

(The company evaluation condition. we evaluate it by the following examination item and examination condition.)

No.	Item	Value *1 Freq. Tolerance [1×10^{-6}] *2 Electrical characteristics	Test method
1	High temp. storage *3	± 2.0	+85 °C × 1000 h
2	Low temp. storage *3	± 2.0	-40 ℃ × 1000 h
3	High temp. with humidity	± 2.0	+85 °C × 85%RH × 1000 h
4	Temp. cycle *3	± 2.0	-40 ℃ to +85 ℃ (30 min × 100 cycle/each)
5	Resistance to Soldering heat (Reflow characteristics)	± 1.0	Reflow furnace with the condition 3 times
6	Drop	± 2.0	150g dummy jig (SEIKO EPSON Standard) drop from 1500 mm height on the concrete 6 directions 3 times.
7	Vibration	± 2.0	10 Hz to 55 Hz amplitude 0.75 mm 55 Hz to 500 Hz acceleration 98 m/s^2 10 Hz → 500 Hz → 10 Hz 15 min / cycle 6 h (2 h × 3 directions)
8	ESD (MM)	± 1.0	200pF, 0Ω, 200V, Discharge 3 pulses
9	ESD (HBM)	± 1.0	100pF, 1.5kΩ, 2000V, Discharge 3 pulses
10	Solderability	Terminals must be 95 % covered with fresh solder	Dip termination into solder bath at +235 ℃ for 5 s (Using Rosin Flux)

Notes

1.*1 each test is independent.

2.*2 measuring 2 h to 24 h later leaving in room temperature after each test.

3.*3 Initial value shall be measured after 24 h storage at room temperature Pre-treatment

Pre-treatment : Bake (+125°C x 24 h) → Moisture soak (+85°C x 60 % x 168 h) → reflow (3 times)

Reflow condition (follow to IPC / JEDEC J-STD-020C)

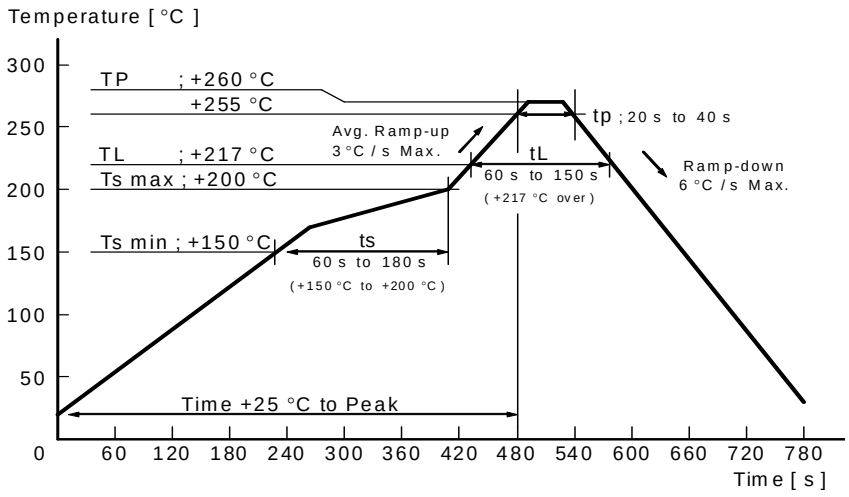

[8] Dimensions And Marking Layout

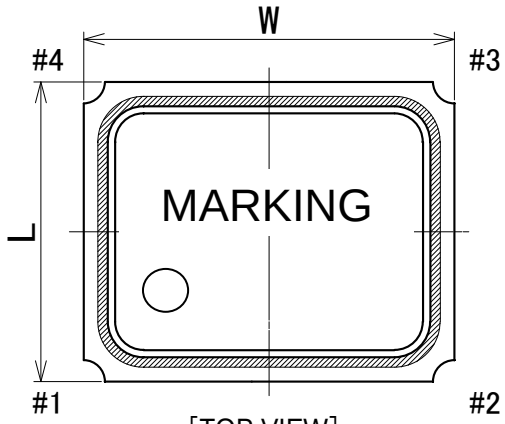

[TOP VIEW]

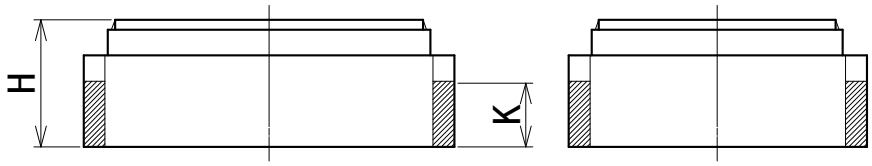

[SIDE VIEW]

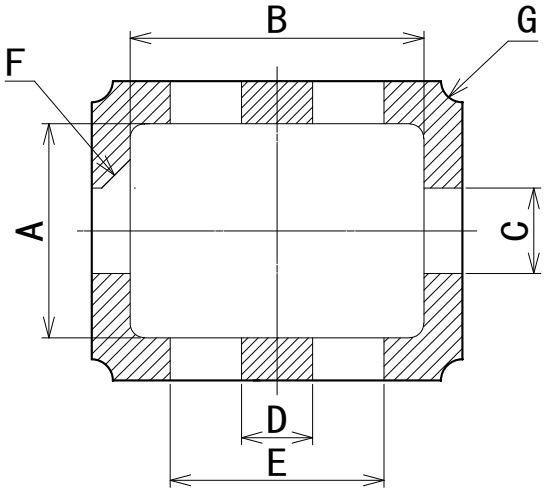

[BOTTOM VIEW]

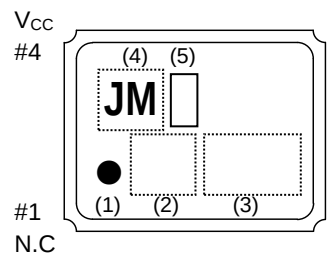

Marking

(1) 1Pin Mark
(2) Arbitrary marking area (2digits)
(3) TCXO LOT NO. (3digits)
(4) TCXO Model ID (JM)
(5) Image recognition mark

Material

Ceramics(base)
Au coated nickel(terminal)
Fe-Ni-Co(lid)

CONNECTION

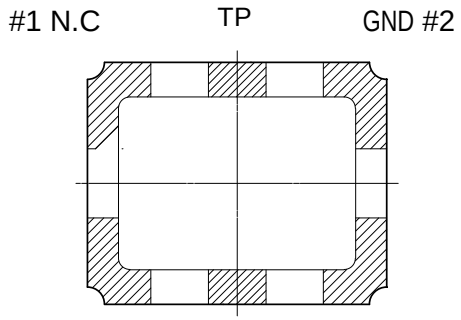

BOTTOM VIEW

(unit : mm)

Dim.	Min.	Typ.	Max.	Dim.	Min.	Typ.	Max.
W	2.35	2.50	2.65	D	0.40	0.50	0.60
L	1.85	2.00	2.15	E	1.35	1.50	1.65
H	0.70	0.80	0.90	F	---	C0.2	---
A	1.35	1.50	1.65	G	---	R0.15	---
B	1.95	2.10	2.25	K	---	0.45	---
C	0.50	0.60	0.70				

[9] Recommendable patterning

For actual design work, please consider optimum condition together with mounting density, reliability of soldering and mount ability etc.

Do not design any patterns except GND on the shaded area.

Soldering position

Unit: mm

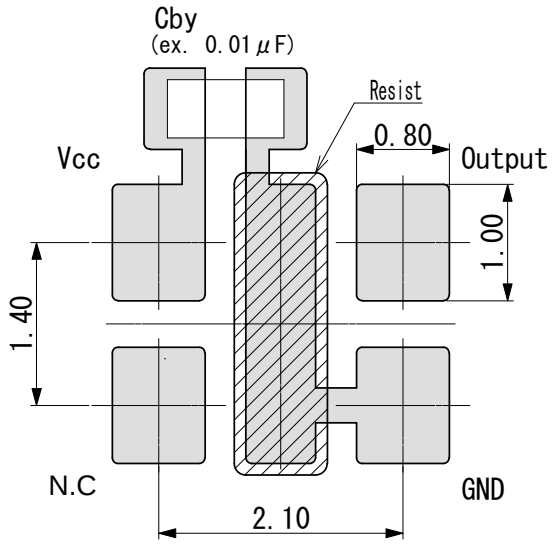

[10] Handling precautions

Prior to using this product, please carefully read the section entitled “Precautions” on our Web site (http://www5.epsondevice.com/en/quartz/tech/precaution/) for instructions on how to handle and use the product properly to ensure optimal performance of the product in your equipment. Before using the product under any conditions other than those specified therein, please consult with us to verify and confirm that the performance of the product will not be negatively affected by use under such conditions.

In addition to the foregoing precautions, in order to avoid the deteriorating performance of the product, we strongly recommend that you DO NOT use the product under ANY of the following conditions:

(1) Mounting the product on a board using water-soluble solder flux and using the product without removing the residue of the flux completely from the board. The residue of such flux that is soluble in water or water-soluble cleaning agent, especially the residues which contains active halogens, will negatively affect the performance and reliability of the product.
(2) Using the product in any manner that will result in any shock or impact to the product.
(3) Using the product in places where the product is exposed to water, chemicals, organic solvent, sunlight, dust, corrosive gasses, or other materials.
(4) Using the product in places where the product is exposed to static electricity or electromagnetic waves.
(5) Applying ultrasonic cleaning without advance verification and confirmation that the product will not be affected by such a cleaning process, because it may damage the crystal, IC and/or metal line of the product.
(6) Touching the IC surface with tweezers or other hard materials directly.
(7) Using the product under any other conditions that may negatively affect the performance and/or reliability of the product.
(8) Using the product with power line ripple exceeding 200 mV(p-p) level.

Should any customer use the product in any manner contrary to the precautions and/or advice herein, such use shall be done at the customer’s own risk.

TAPING SPECIFICATION

Ⅰ. Application

This standard will apply to 2.5×2.0 Ceramic package.

Spec：CG package

Ⅱ. Contents

Item No.	Item	Page
〔1〕	Taping specification	1 to 2
〔2〕	Inner carton	3
〔3〕	Shipping carton	
〔4〕	Marking	4
〔5〕	Quantity	
〔6〕	Storage environment	
〔7〕	Handling	

〔1〕 Taping specification

Subject to EIA-481& IEC 60286

(1) Tape dimensions

Material of the carrier tape : PS

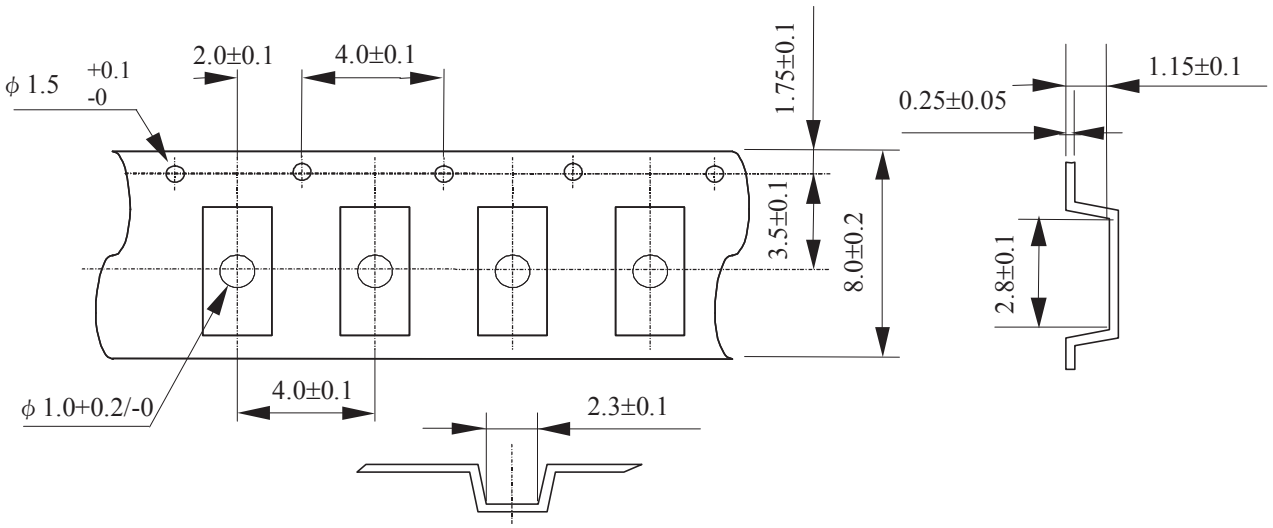

Unit : mm

(2) Reel dimensions

Material of the reel : PS

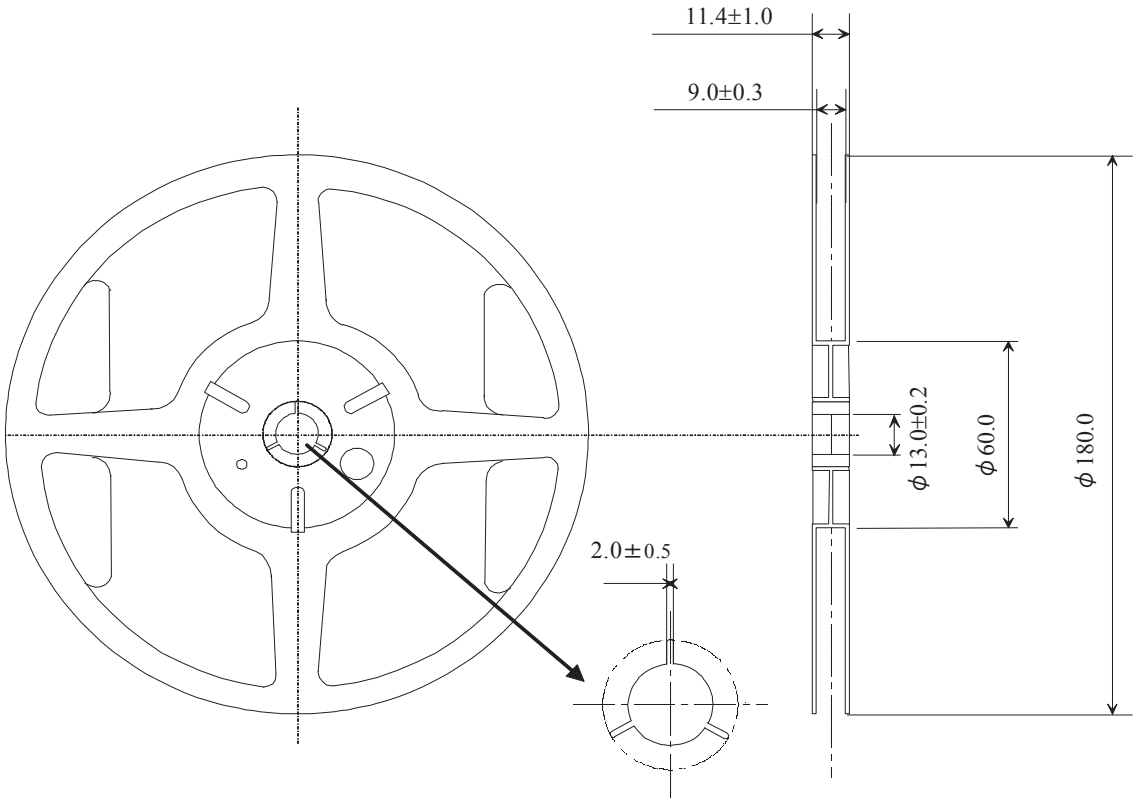

Unit : mm

(3) Packing

①Tape & reel

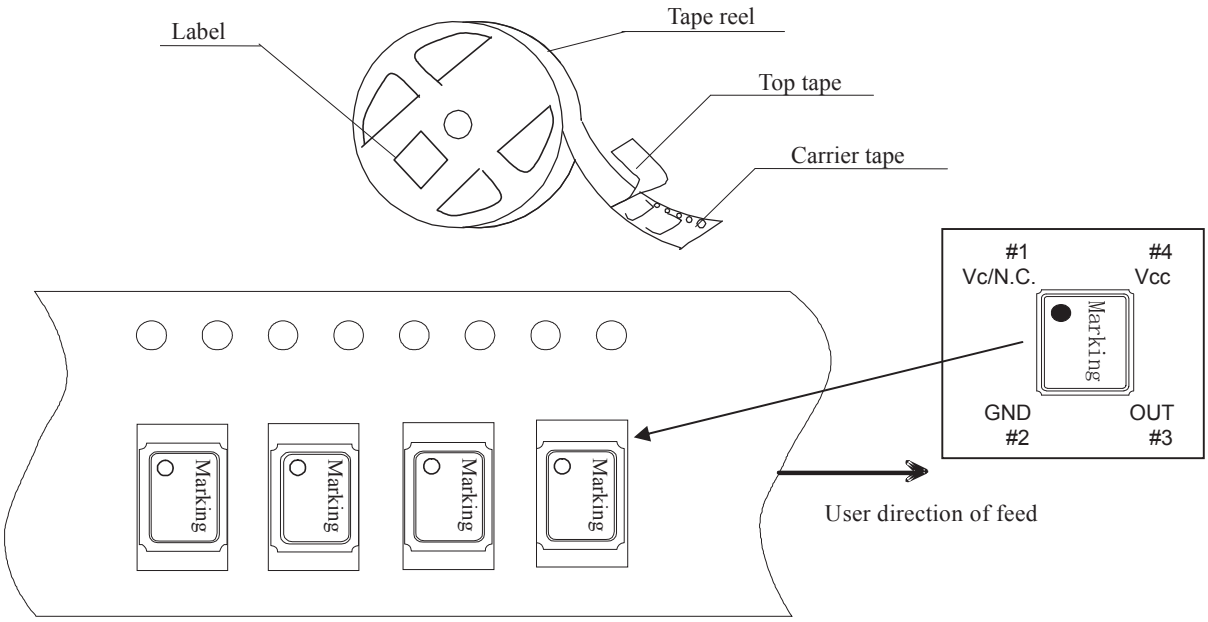

②Start & end point

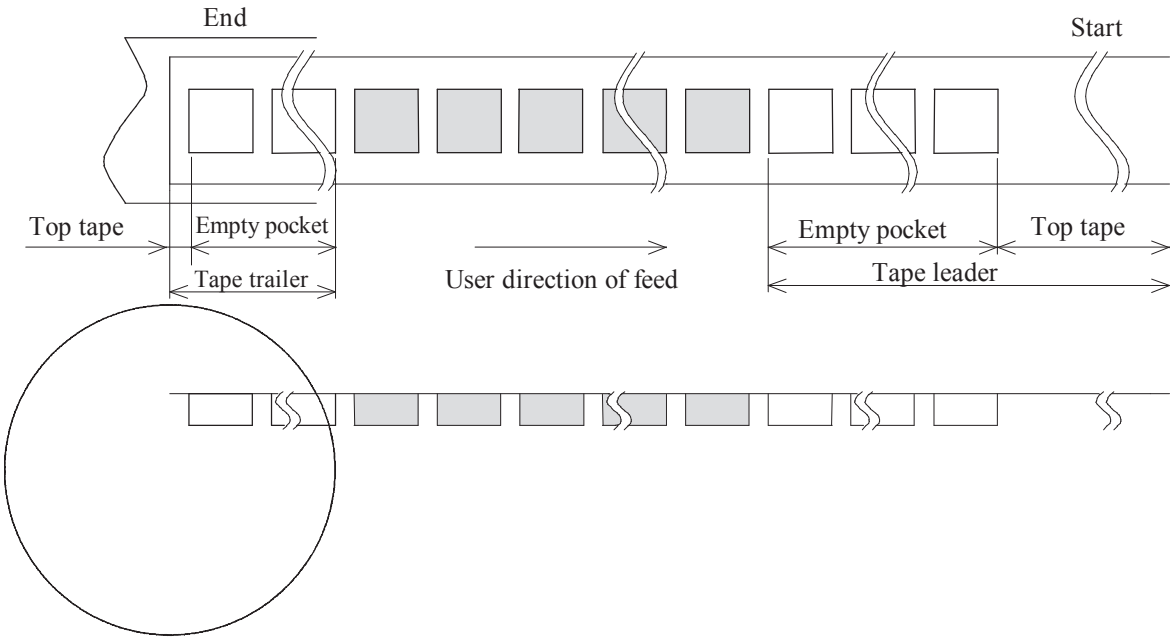

Item		Empty space
Tape leader	Top tape	Min. 200 mm
	Empty pocket	Min. 150 mm
Tape trailer	Top tape	Min. 0 mm
	Empty pocket	Min. 150 mm

〔2〕 Inner carton

a) Packing to alumi laminate bag

The reel is packed in the vacuum with the alumi laminate bag.

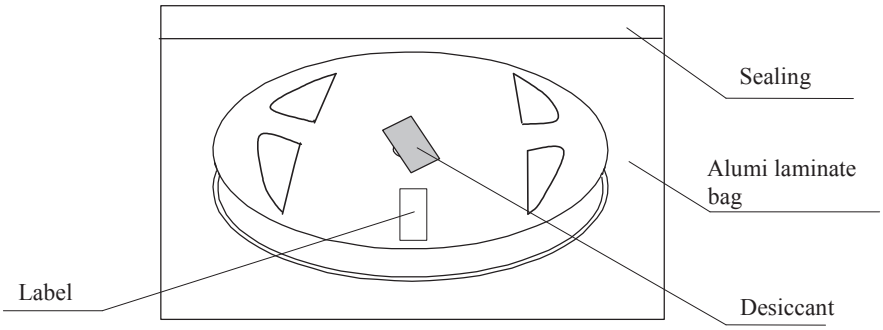

b) Packing to inner carton

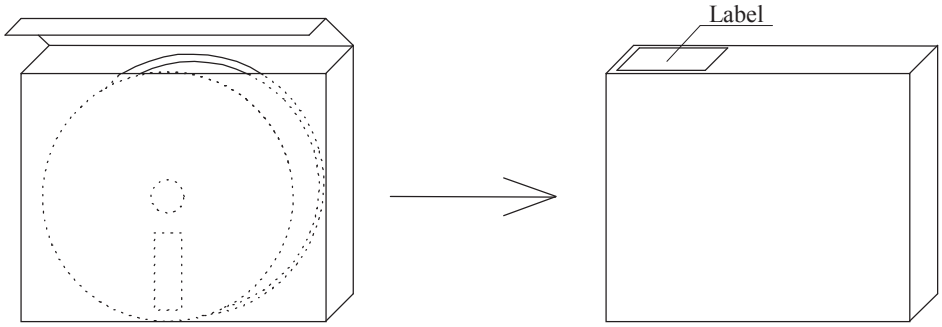

〔3〕 Shipping carton

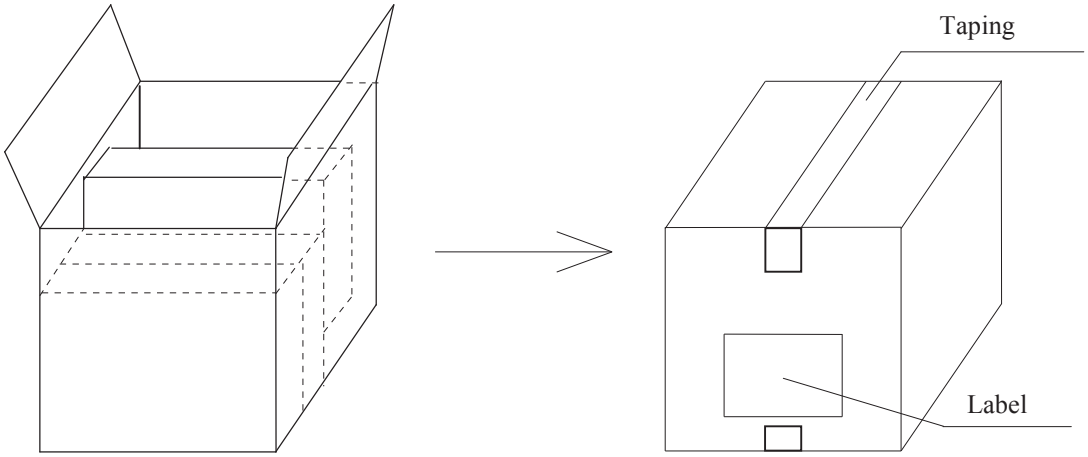

〔4〕 Marking

(1) Reel marking

・Reel marking shall consist of :

1) Parts name
2) Quantity
3) Manufacturing date or symbol
4) Manufacturer's name or symbol
5) Others (if necessary)

(2) Inner carton marking

・Same as reel marking.

(3) Shipping carton marking

・Shipping carton marking shall consist of :

1) Parts name
2) Quantity

〔5〕 Quantity

・Max : 2000 pcs/reel Min : 500 pcs/reel

〔6〕 Storage environment

(1) To storage the reel at 15 °C to 35 °C, 25 %RH to 85 %RH of humidity.
(2) To open the packing just before using.
(3) Not to expose the sun.
(4) Not to storage with some erosive chemicals.
(5) Nothing is allowed to put on the reel or carton to prevent mechanical damage.

〔7〕 Handling

・To handle with care to prevent the damage of tape, reel and products.

- PROCESS QUALITY CONTROL -

'14.05.08

SEIKO EPSON CORP.
Timing Device Business Unit

Approved	Checked	Prepared
H.koike		H.suzuki

No. TG5006CG - 00 – AVE - 2 CRYSTAL OSCILLATOR : TG-5006CG

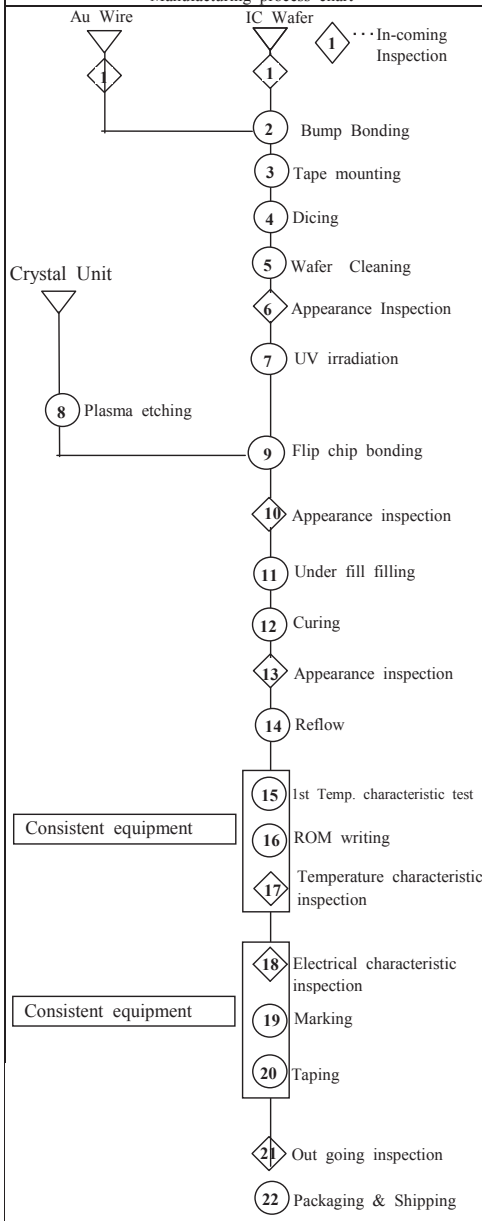

No.	Section In Charge	Standards	Inspection, Control Item	Instruments	Inspection Methods	Record
1	EPSZ／ EPMY Sub contructor	Purchase specification Delivery card	Appearance	Visual inspection	Every lot	Data sheet
2	EPSZ／ EPMY Sub contructor	Specification (Work standard)	Heater temperature Bump dimension Shear strength	Thermometer Microscope Bond tester	Daily Sampling Sampling	Daily check sheet Data sheet Data sheet
3	EPSZ／ EPMY Sub contructor	Specification (Work standard)	Cutting condition Appearance	Visual inspection	Daily	Daily check sheet
4	EPSZ／ EPMY Sub contructor	Specification (Work standard)	Abrasion loss of Blade	Built-in gauge	Every batch	Tool change check sheet
5	EPSZ／ EPMY Sub contructor	Specification (Work standard)	Water resistance	Built-in meter	Daily	Daily check sheet
6	EPSZ／ EPMY Sub contructor	Specification (Work standard)	Dicing condition	Microscope	Sampling	Data sheet
7	EPSZ／ EPMY Sub contructor	Specification (Work standard)	UV condition	UV intensity meter	Daily	Daily check sheet
8	EPSZ／ EPMY Sub contructor	Specification (Work standard)	Flow rate of O2 and Ar	Built-in meter	Daily	Daily check sheet
9	EPSZ／ EPMY Sub contructor	Specification (Work standard)	Number of US tool shots Number of ejector needle shot. Heater temperature Bump dimension Shear strength	Built-in counter Built-in counter Thermometer Microscope Bond tester	100% 100% Daily Sampling Sampling	Tool change check sheet Daily check sheet Data sheet Data sheet
10	EPSZ／ EPMY Sub contructor	Specification (Work standard)	Flipchip bonding Condition	Microscope	Sampling	Data sheet
11	EPSZ／ EPMY Sub contructor	Specification (Work standard)	Chip coat storage temp. Pot lifetime	Thermometer Built-in timer	Daily 100%	Daily check sheet Tool change check sheet
12	EPSZ／ EPMY Sub contructor	Specification (Work standard)	Curing time Oven temperature	Timer Thermometer	Every batch Daily	Data sheet Daily check sheet
13	EPSZ／ EPMY Sub contructor	Specification (Work standard)	Appearance (FC & Under fill condition)	Microscope	100% Inspection	Data sheet
14	EPSZ／ EPMY Sub contructor	Specification (Work standard)	Reflow profile	Thermometer	Daily	Daily check sheet
15	EPSZ／ EPMY Sub contructor	Specification (Work standard)	Stage temperature	Thermometer	Daily	Daily check sheet
16	EPSZ／ EPMY Sub contructor	Specification (Work standard)	Stage temperature	Thermometer	Daily	Daily check sheet
17	EPSZ／ EPMY Sub contructor	Specification (Work standard)	Stage temperature Temperature characteristic	Thermometer Frequency counter	Daily 100% Inspection	Daily check sheet Data sheet
18	EPSZ／ EPMY Sub contructor	Specification (Work standard)	Frequency, Output-level Current drain, Frequency control range Master confirmation	Multi-meter Freq. counter Oscilloscope	100% Inspection	Data sheet
19	EPSZ／ EPMY Sub contructor	Specification (Work standard)	Appearance Marking	CCD camera	100% Inspection	Data sheet
20	EPSZ／ EPMY Sub contructor	Specification (Work standard)	Peeling off strength Direction	Peel back tester Visual inspection	Daily Sampling Delivery lot	Daily check sheet Data sheet
21	EPSZ／ EPMY Sub contructor	Specification (Work standard)	Frequency, Current drain, Appearance, Dimension	Freq. counter,Multi-meter, Visual inspection Calipers	Sampling	Data sheet
22	Production Control Department (EPSZ/EPMY Sub contructor & EPMY & Ina Plant)	Specification (Work standard)	Quantity	Visual inspection	Sampling Delivery lot	Data sheet Delivery record

Structure diagram. TG-5006CG

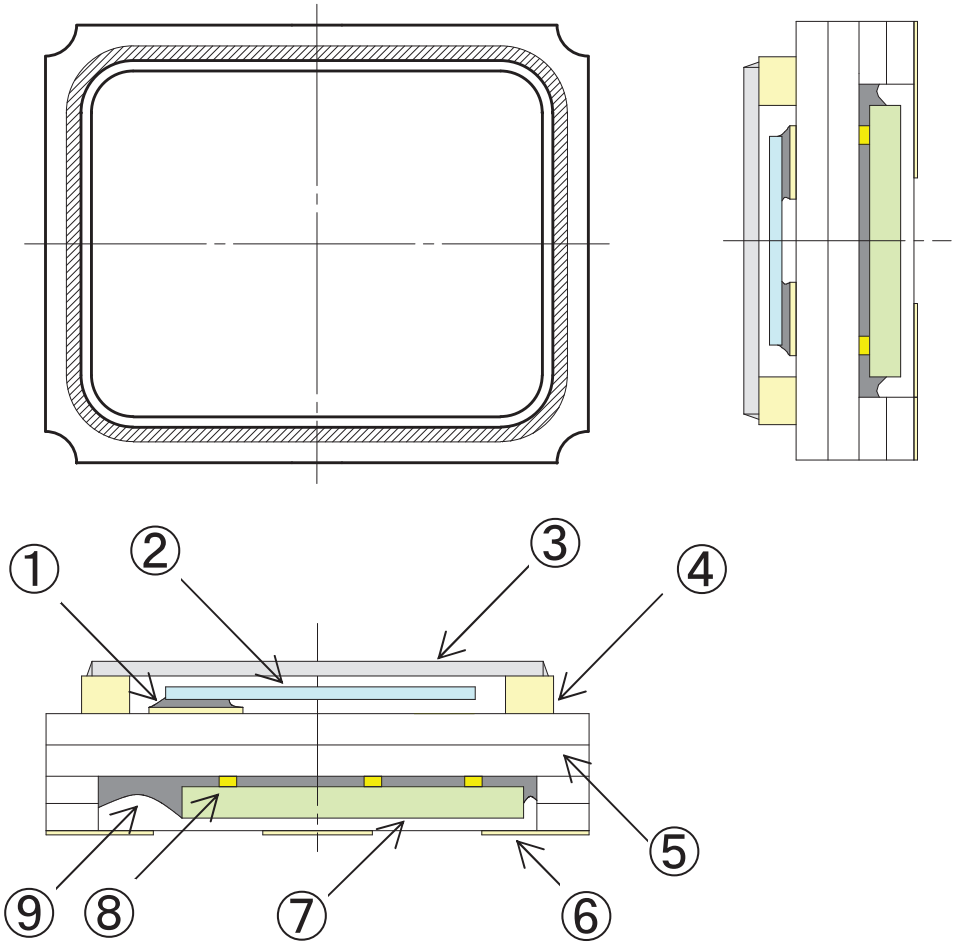

LIST		
Name of part		Specification
1	XTAL adhesives	Ag paste
2	XTAL chip	AT cut
3	Lid	Fe – Ni – Co
4	Seam ring	Kovar ＋ Ni ,Au
5	Base	Ceramic PKG
6	Terminal	Au coated , Ni
7	IC	CMOS
8	FC bump	Au
9	UF	Potting resin
10		

TCE13-CO-214_02		
MGR.	CHK.	ENG.
Y.Shishido		A.Kakumae

RELIABILITY TEST DATA

Product Name : TG-50xxCG series

The Company evaluation condition

We evaluate environmental and mechanical characteristics by the following test condition . **OUT10-E31-40M**

No.	ITEM	TEST CONDITIONS	VALUE *1		TEST Qty [n]	FAIL Qty [n]
			Δ f / f *2 [1 × 10^{-6}]	Electrical characteristics		
1	High temperature storage	+85 °C × 1 000 h	*3 ± 2.0	Satisfy output level after test	22	0
2	Low temperature storage	-40 °C × 1 000 h	*3 ± 2.0		22	0
3	High Temperature with Humidity	+85 ± 2 °C × 85 ± 5 %RH × 1 000 h	*3 ± 2.0		22	0
4	Temperature cycle	-40 °C ⇔ +85 °C 30 min at each temp. 1000 cycles	*3 ± 2.0		22	0
5	Resistance to soldering heat	Convection reflow soldering furnace (3 times)	± 1.0		22	0
6	Drop	150g dummy jig (Epson Toyocom Standard) drop from 1500 mm height on the concrete 6 directions 3 times.	± 2.0		22	0
7	Vibration	10 Hz to 55 Hz amplitude 0.75 mm 55 Hz to 500 Hz acceleration 98 m/s^2 10 Hz → 500 Hz → 10 Hz 15 min / cycle 6 h (2 h × 3 directions)	± 2.0		22	0
8	ESD (MM)	200pF 0Ω 200V , Discharge 3 pulses	± 1.0		22	0
9	ESD (HBM)	100pF 1.5kΩ 2000V , Discharge 3 pulses	± 1.0		22	0
10	Solderability	Dip termination into solder bath at +235 °C ± 5 °C for 5 s (Using Rosin Flux)	Termination must be covered with fresh solder more than 95 % of dip area.		11	0

Notes

1. *1 Each test done independently.
2. *2 Measuring 2 h to 24 h later leaving in room temperature after each test.
3. *3 Initial value shall be measured after 24 h storage at room temperature Pre-treatment
   Pre-treatment : Bake (+125 ℃ × 24 h) →Moisture soak (+85 ℃ × 60 % × 168 h) →reflow (3 times)

Qualification Data

Product Name : TG-50xxCG series

df / f

1. High temp. storage
+85 °C × 1 000 h

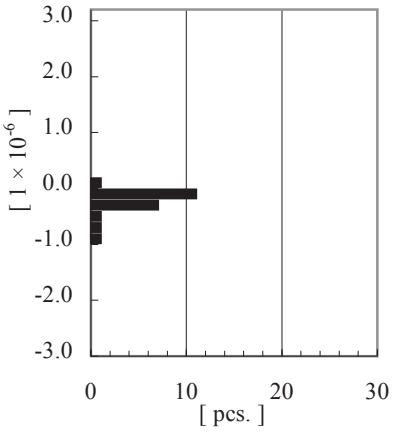

2. Low temp. storage
-40 °C × 1 000 h

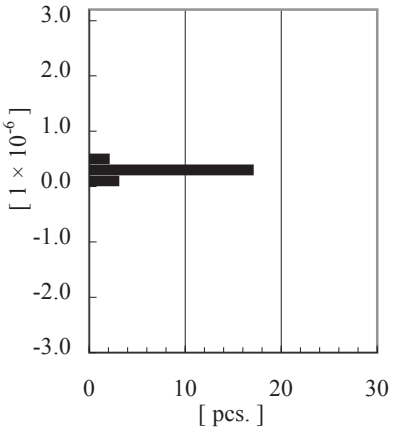

3. Temp. humidity storage
+85 °C × 85 %RH × 1 000 h

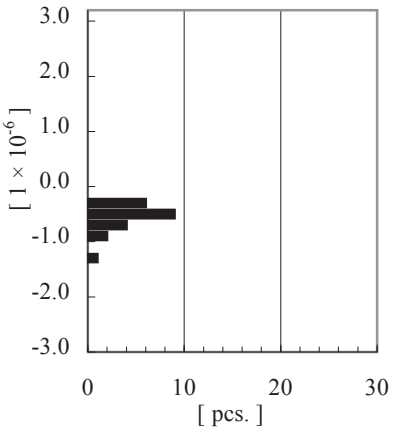

4. Temp. cycle
-40 °C ⇔ +85 °C
1000 cycles

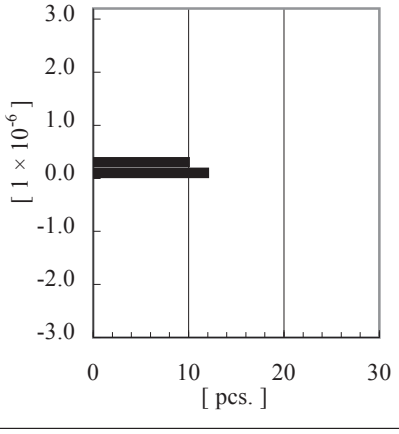

5. Resistance to soldering heat
For convention reflow soldering furnace (3 times)

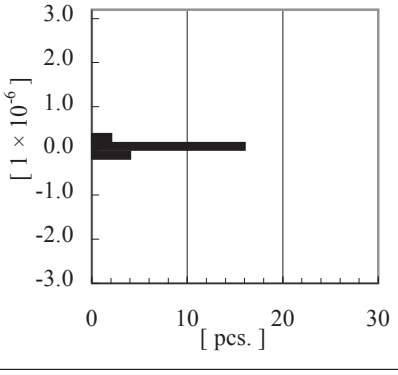

6. Drop
1500 mm × 6 times

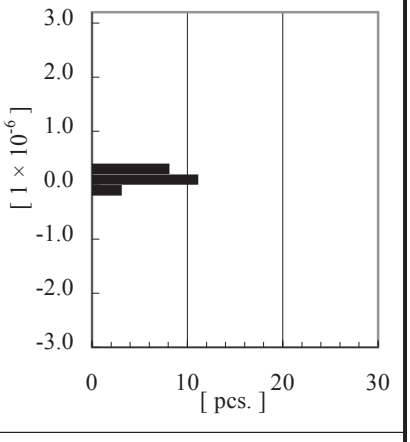

7. Vibration
10 Hz to 55 Hz amplitude 0.75 mm
55 Hz to 500 Hz acceleration 98 m/s^2
15 min / cycle
6 h (2 h × 3 directions)

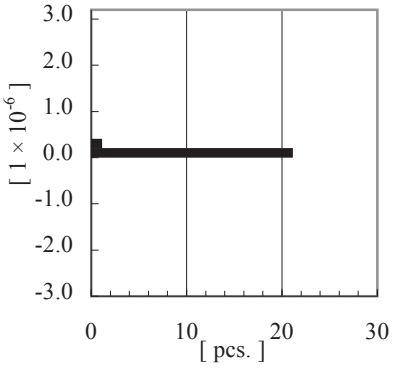

8. ESD (MM)
200pF 0Ω 200V

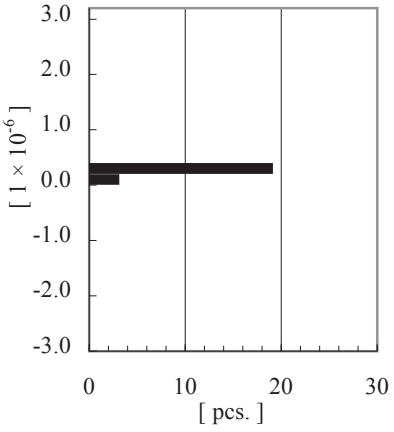

9. ESD (HBM)
100pF 1.5kΩ 2000V

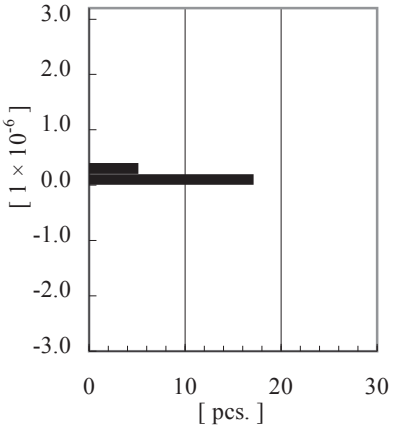

Qualification Data