ZTE KANGXUN TELECOM CO. LTD.

RECIPIENT

SPECIFICATIONS

MODEL	**VG7050EBN 753.621100MHz CJGHBZ**
FREQUENCY	**753.621100 MHz**
SPEC. No.	**H13-018-0A**
DATE	**29th.OCT . 2013**

SEIKO EPSON CORPORATION

8548 Naka-minowa Minowa-machi Kamiina-gun
Nagano-ken 399-4696 Japan

CHECKED M. Ota **/TD Production Engineering Department Manager**

CHECKED S. Higuchi **/TD Production Engineering Department Staff**

CHECKED **/TD･CS Quality Assurance Department Manager**

PREPARED S. Sato **/TD･CS Quality Assurance Department Staff**

SPECIFICATIONS

1. Application

This specifications apply to Crystal oscillator VG7050EBN 753.621100MHz CJGHBZ.
This product is compliant with RoHS Directive.
This Product supplied (and any technical information furnished, if any) by Seiko Epson Corporation shall not be used for the development and manufacture of weapon of mass destruction or for other military purposes.

Making available such products and technology to any third party who may use such products or technologies for the said purposes are also prohibited.

This product listed here is designed as components or parts for electronics equipment in general consumer use. We do not expect that any of these products would be incorporated or otherwise used as a component or part for the equipment, which requires an extra high reliability, such as satellite, rocket and other space systems, and medical equipment, the functional purpose of which is to keep life.

2. Product Model

The model is VG7050EBN 753.621100MHz CJGHBZ.

3. Packing

It is subject to the packing standard of Seiko Epson Corp.

4. Warranty

Defective parts which are originated by us are replaced free of charge in case defects are found within 12 months after delivery.

5. Amendment and abolishment

Amendment and/or abolishment of this specification are subject to the agreement between both parties.

6. Contents

Item No.	Item	Page
[1]	Absolute maximum ratings	2
[2]	Operating range	2
[3]	Frequency characteristics	2,3
[4]	Terminal description	4
[5]	Electrical characteristics	5
[6]	Test circuit	6
[7]	Timing chart	7,8
[8]	Environmental and mechanical characteristics	9
[9]	Electro static Discharge	10
[10]	Dimensions and marking layout	11
[11]	Board patterning	12
[12]	Notes	13

[1] Absolute maximum ratings

Parameter	Symbol	Value	Unit	Note
Supply voltage	V_{CC}	-0.3 to +4.0	V	
Storage temperature range *	T_stg	-55 to +125	°C	Stored as bare product after unpacking.
Input voltage	Vc	-0.3 to V_{CC}+0.3	V	Vc Terminal

* Concerning the frequency change, please refer [8] Environmental and mechanical characteristics.

[2] Operating range

Parameter	Symbol	Value			Unit	Note
		Min.	Typ.	Max.		
Supply voltage	V_{CC}	2.970	3.300	3.630	V	C*****
Supply voltage	GND	0.0	0.0	0.0	V	
Control voltage	V_C	0.30	1.65	3.00	V	
Output frequency	fo	—	753.621100	—	MHz	
Operating temperature range	T_use	-40	+25	+85	°C	
Output load condition	L_ECL	50			ohm	

*1 Start up time(0 %V_{CC}→90 %V_{CC}) of power source should be more than 150 μs.

*2 By-pass capacitor (approx. 0.1 μF) should be placed closely between Vcc and GND.

[3] Frequency characteristics

Output frequency (f_0) ..... 753.621100 MHz

（GND=0.0V, Vc=1.65V）

Parameter	Symbol	Value[1×10^{-6}]	Note
Frequency tolerance *	f_tol	± 50	T_use=-40 °C to +85 °C

* This includes initial frequency tolerance, temperature variation, supply voltage variation, load variation and 10 years aging(at 25℃).

3) Output Frequency characteristics

[T_use=+25℃]

Parameter	Symbol	Value			Unit	Note
		Min.	Typ.	Max.		
Absolute Pull Range	APR	±50	-	-	10^{-6}	****B*
Input resistance	Rin	5	-	-	MΩ	Vc terminal, DC level
Frequency tuning linearity	f_{LIN}		-	±10	%	
Modulation band width	BW	10	-		kHz	±3dB
Frequency change polarity	-	Positive polarity			-	

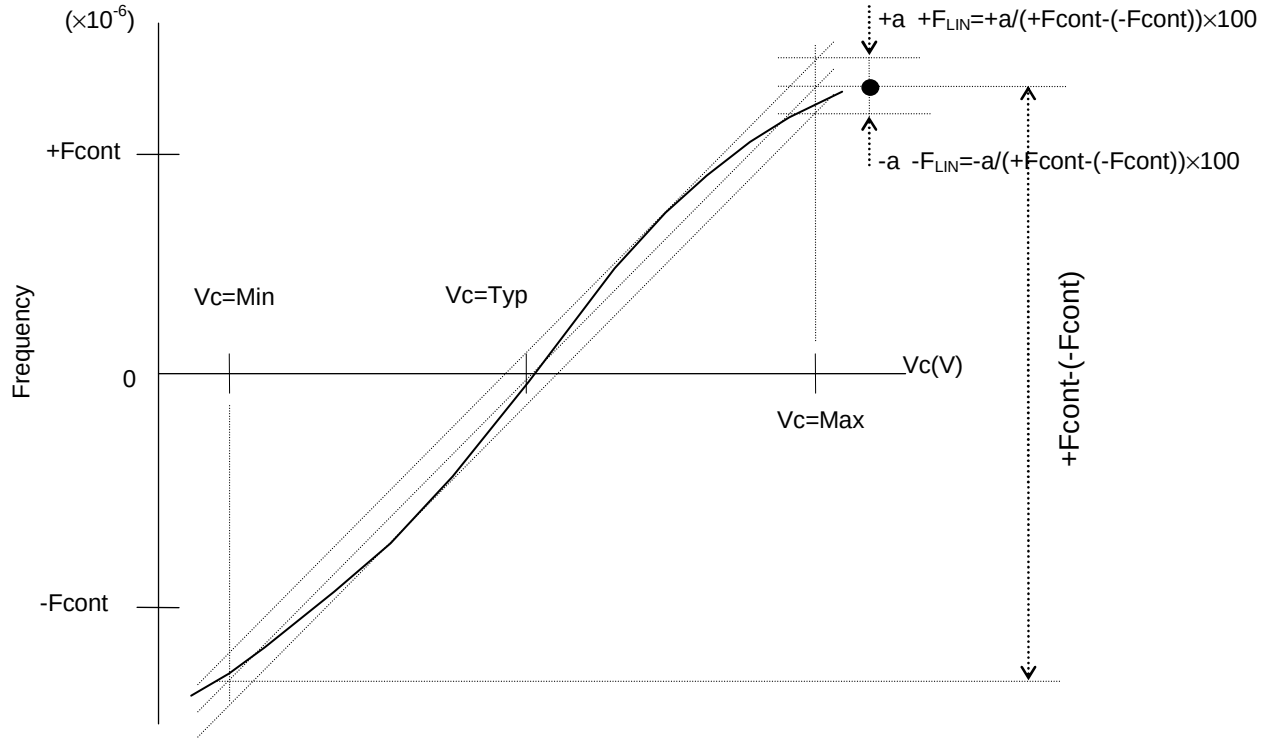

Exsample of controling freaquency characteristics

[4] Terminal description

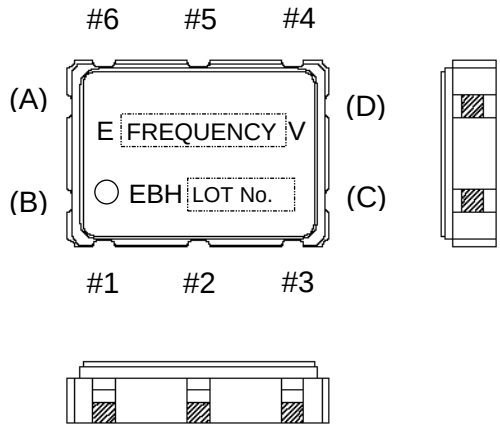

Name	No.	Type	Terminal description
Vc	#1	INPUT	Vc terminal
OE	#2	—	OE terminal / Active High
GND	#3	—	GND terminal
OUT1	#4	OUTPUT (Positive)	Clock out terminal
OUT2	#5	OUTPUT (Negative)	Clock out terminal. Inversion output of #4
Vcc	#6	—	Vcc terminal

[5] Electrical characteristics

(Please see page 2 [2] Operating range)

Parameter	Symbol	Value			Unit	Note
		Min.	Typ	Max		
Start up time	t_{OSC}	–	–	10	ms	0sec at 90 % Vcc
Current consumption	Icc	–	–	90	mA	R_L=50ohm
Rise time *1	tr	–	–	0.4	ns	20 % to 80 % output swing
Fall time *1	tf	–	–	0.4	ns	80 % to 20 % output swing
Symmetry *1	SYM	45	–	55	%	Vcc-1.3V, Vc=1/2Vcc
High level output voltage	V_{OH}	Vcc-1.025	–	–	V	DC characteristic
Low level output voltage	VOL	–	–	Vcc-1.62	V	DC characteristic
Phase jitter	t_{PJ}	–	0.2	0.3	ps	12 kHz to 20 MHz

Please see [6] Test circuit.

*1 Please see [7] 1) Output waveform.

Phase Noise Characteristic

frequency [MHz]		Offset Frequency				
		@1kHz [dBc/Hz]	@10kHz [dBc/Hz]	@100kHz [dBc/Hz]	@1MHz [dBc/Hz]	@10MHz dBc/Hz]
753.621100	Typical.	-102	-117	-124	-128	-147
	Max.	-92	-112	-120	-124	-144

[6] Test circuit

1) To observe waveform and current

2) Condition

(1) Oscilloscope

- Bandwidth should be 5 times higher than DUT's output frequency.
- Probe ground should be placed closely from test point and lead length should be as short as possible.

(2) By-pass capacitor (approx. 0.1 μF) should be placed closely between Vcc and GND.

(3) Use the current meter whose internal impedance value is small.

(4) Power supply

- Start up time(0 V→90 %Vcc)of power source should be more than 150 us.
- Impedance of power supply should be as low as possible.

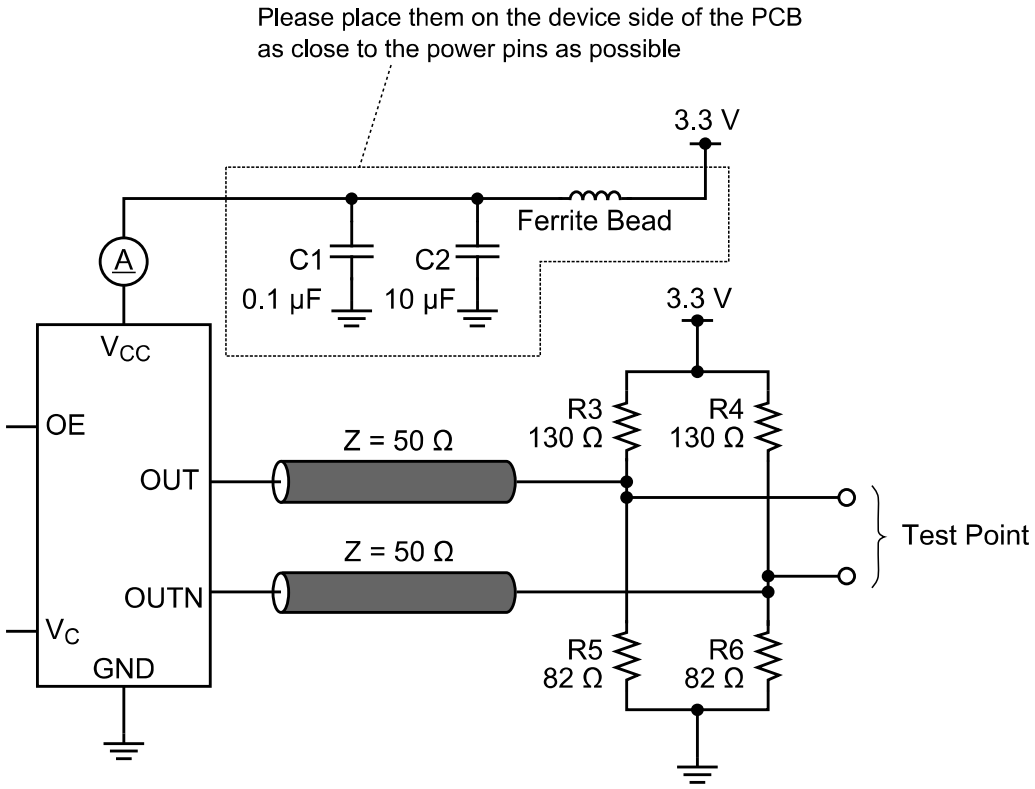

[7] Timing chart

1) Output waveform

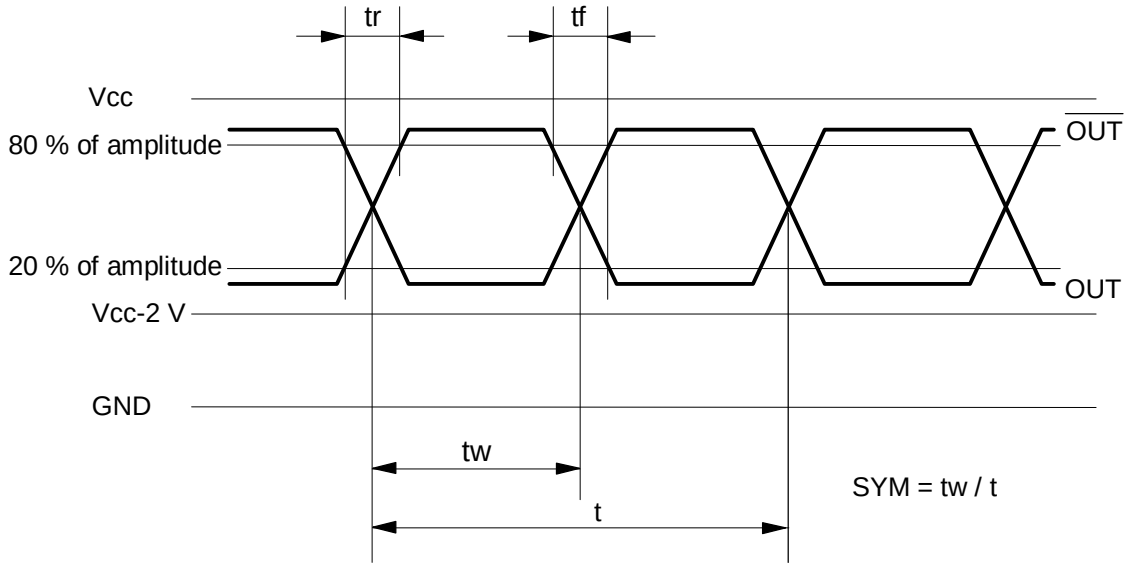

2) Output Signal timing

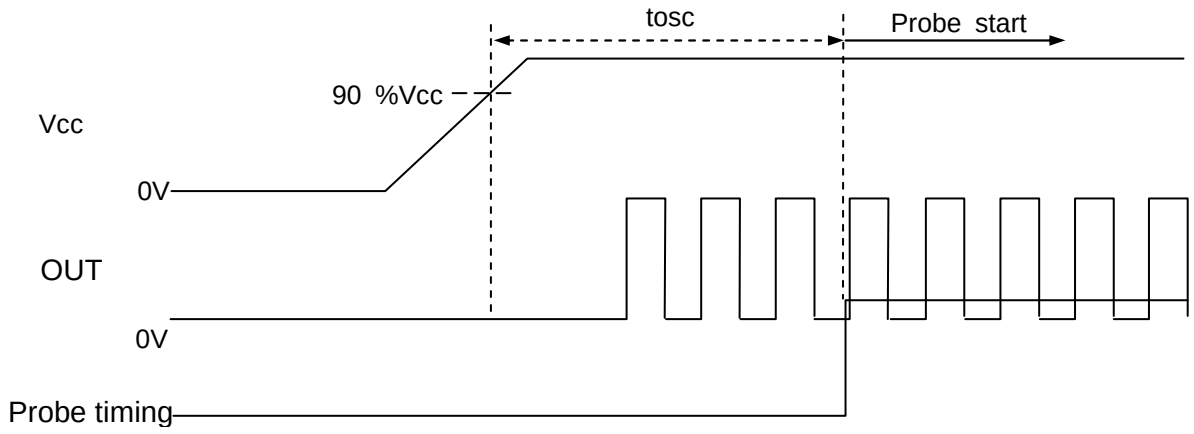

3) Vc control timing

*Please rise up the Vc voltage after the Vcc voltage rises up.

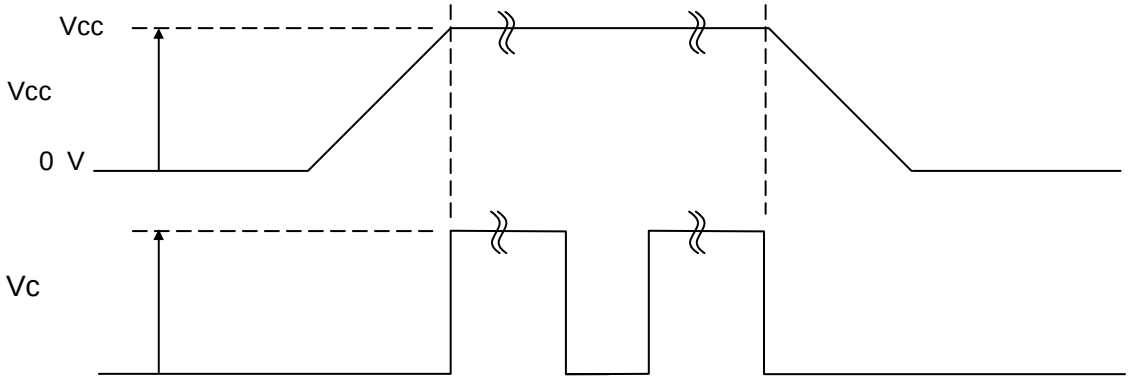

4) OE function and timing

OE input level	Oscillation Circuit	Output
“H” or Open	Oscillation	Enable : specified frequency
“L”	Oscillation	Disable : high impedance

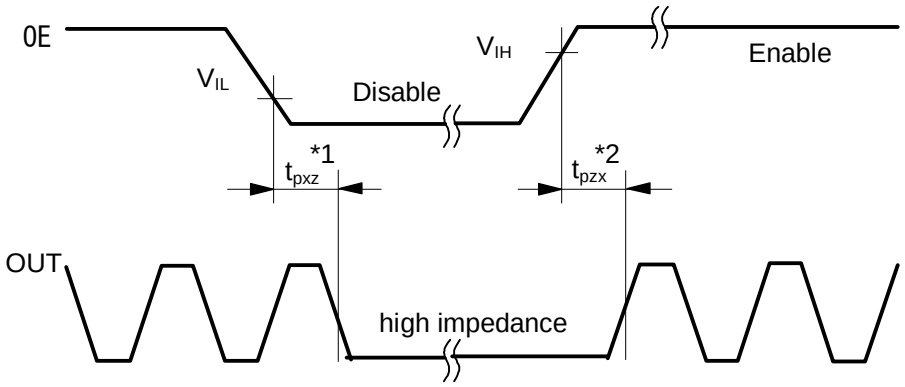

*1 The time taken from OE=V_{IL} to OUT=Disable (high impedance).

*2 The time taken from OE=V_{IH} or Open to OUT=Enable.

[8] Environmental and mechanical characteristics

*Seiko Epson evaluation condition : Evaluated by the following examination items and conditions.

No.	Item	Value *1		Test Conditions
		Δ f / f *2 [1×10^{-6}]	Electrical characteristics	
1	High temperature bias *3	±10	Satisfy [5] specification after test	+85 °C × Vcc/Vc × 1 000 h
2	High temperature storage *3	±10		+125 °C × 1 000 h
3	Low temperature storage *3	±10		-55 °C × 1 000 h
4	High temp. humidity storage *3	±10		+85 °C × 85 %RH × 1000 h
5	Temperature cycle *3	±10		-55 °C ~ +125 °C 30 min. at each temp. 100 cycles
6	Resistance to soldering heat	±10		For conventional reflow soldering furnace (3 times) Ref. IPC/JEDEC J-STD-020D.1
7	Vibration	± 5		10 Hz to 85 Hz amplitude 1.5 mm 85 Hz to 2 000 Hz acceleration 20G 10 Hz → 2 000 Hz → 10 Hz 20 min./cycle 12 h (4 h × 3 directions)
8	Shock	± 5		1000 G 1/2 sine wave 3 shocks in X,Y,Z (Total of 9 shocks).
9	Sealing	1×10^{-9} Pa·m^3/s Max.		For He leak detector

< Notes >

*1 Each test done independently.

*2 Measuring 1 h to 24 h later leaving in room temperature after each test.

*3 Initial value shall be measured after 24 h storage at room temperature after pre-conditioning.
Pre-conditioning: Reflow (3 times)

Convection reflow condition (Ref. IPC/JEDEC J-STD-020D.1)

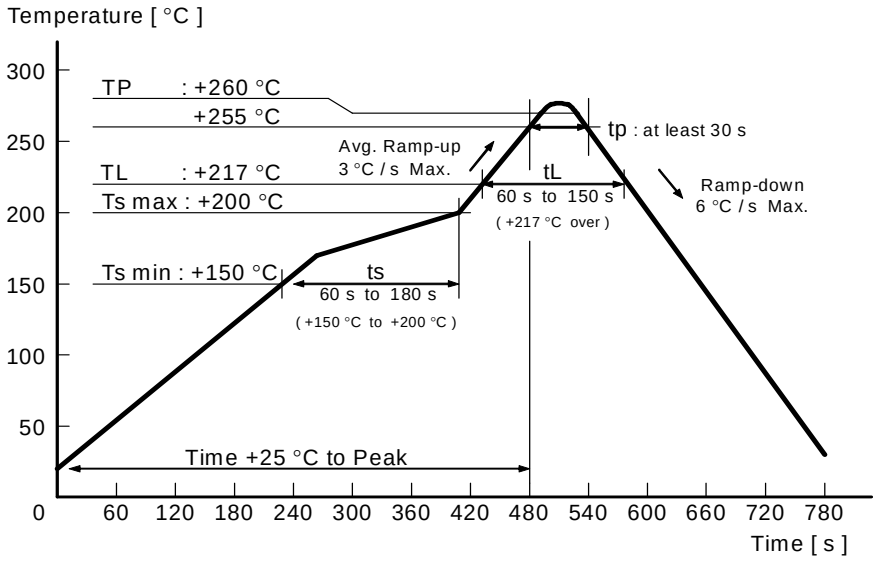

[9] Electro Static Discharge

・ESD

Item	Value	Condition
Human Body Model (HBM)	±2 000 V	Ref.IEC 60749-26 Ed. 2.0:2006 (b) 100 pF, 1.5 kΩ, 3 times
Machine Model (MM)	±200 V	Ref.IEC 60749-27 Ed. 2.0:2006 (b) 200 pF, 0 Ω, 1 time

[10] Dimensions and marking layout

1) Dimensions

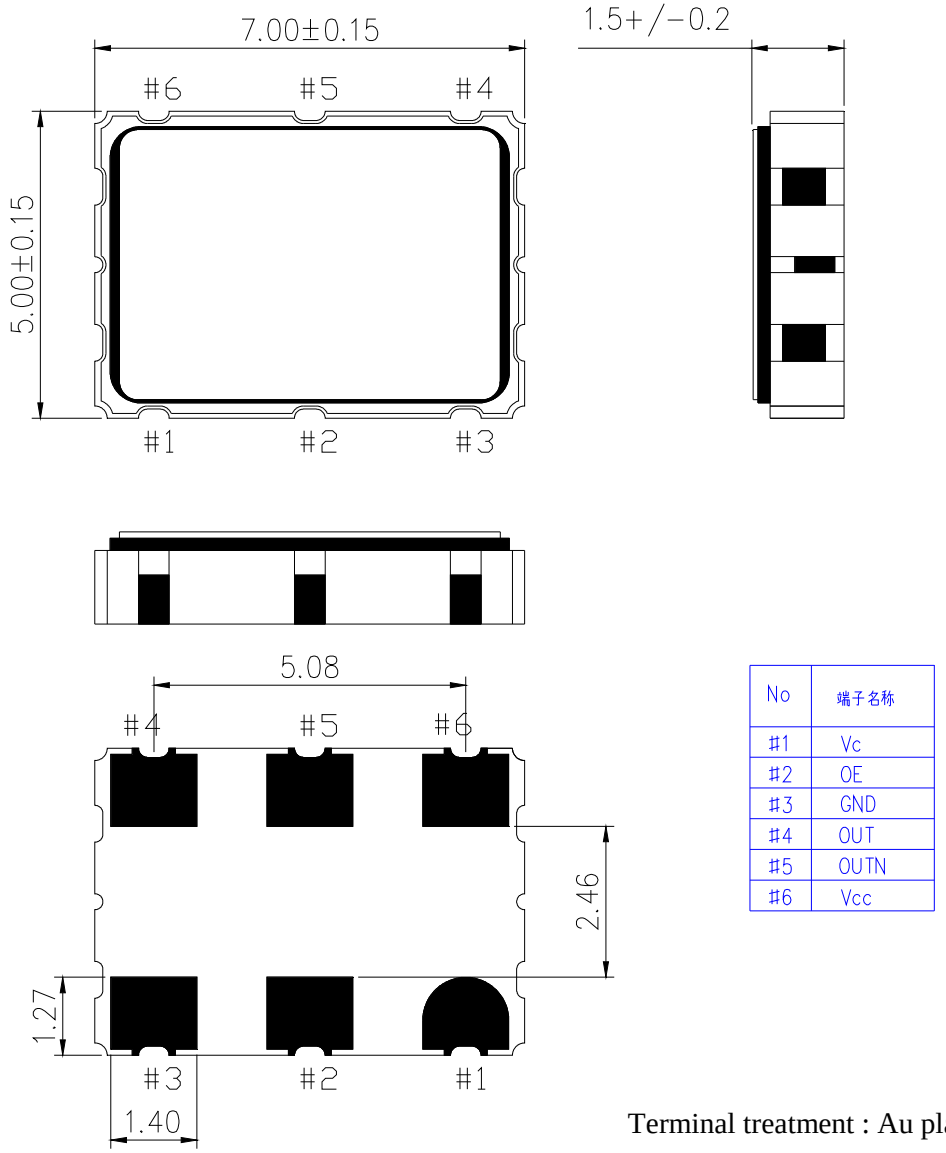

No	端子名称
#1	Vc
#2	OE
#3	GND
#4	OUT
#5	OUTN
#6	Vcc

Terminal treatment : Au plating

Unit : mm

2) Marking layout

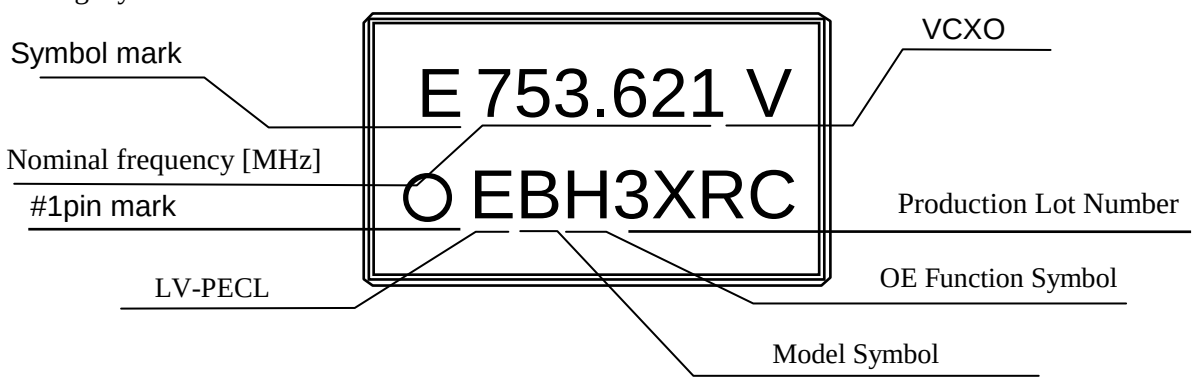

* The above marking layout shows only marking contents and their approximate position, not actual font, size and exact position.
* Nominal frequency omits the figure below the forth place of decimals.

[11] Board patterning

The soldering pad sample indicated as like following:
Soldering position (Unit : mm)

Cby = approx. 0.1 μF

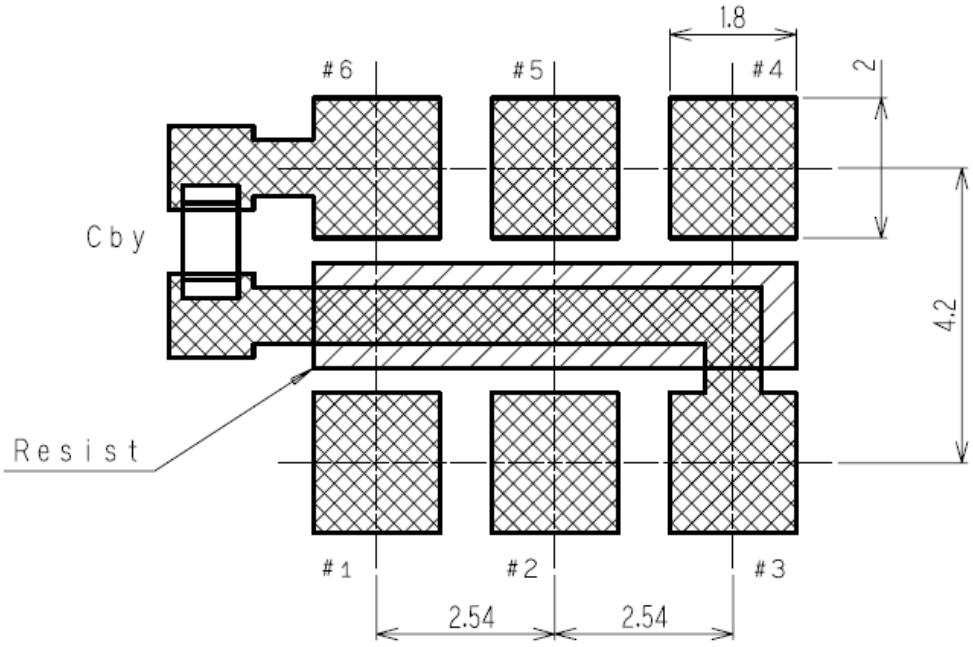

[12] Notes

1) This device contains a crystal resonator, so please do not expose to excessive shock or vibration.
2) This device is made with C-MOS IC.
   Please take necessary precautions to prevent damage due to electrical static discharge.
3) We recommend to use and store under room temperature and normal humidity to secure frequency accuracy and prevent moisture.

4) We will announce the discontinuance and switch to our successor before six months or more.
5) Recommendation reflow times are less than 3 times.
   When there was a soldering error, please do alteration with a soldering iron.
   In this case, the iron ahead is equal to or less than +350 °C and asks within 5 s.
   In case that this device is reflow soldered on the back side of your circuit board, please carefully verify the device is properly secured to prevent coming detached from card.

[About soldering method]

Soldering method	OK or NG
Reflow soldering (top side)	OK
Reflow soldering (back side)	Please carefully verify the device is properly secured to prevent coming detached from card.
Solder pot (static solder pot / flow solder pot)	NG
Iron soldering	OK

6) Ultrasonic cleaning can be used on this product, however, since the oscillator might be damaged under some conditions, please exercise caution in advance.

7) Protection against periodically mechanical vibration
   While there is any given shock or mechanical vibration periodically to crystal products, such as, a cooling fan, a piezo sounder, a piezo buzzer, and a speaker to crystal products, output frequency and amplitude can be changed. Especially the quality of telecommunication equipment could be affected by this phenomenon. Although Epson's crystal products are designed to minimize the effect of mechanical vibration, we recommend checking them in advance.
8) The metal part of the surface (metal cap) is connected to GND #3 pin.
   Please take necessary precautions to prevent short circuit to GND by contact with the metal cap.
9) Side leads are connected to IC internally. Therefore be careful for short or a fall of insulation resistance etc.
10) Vcc and GND pattern shall be as large as possible so that high frequency impedance shall be small.
11) Seiko Epson doesn't recommend to power on from intermediate electric voltage or extreme fast power on. Those powering conditions may cause no oscillation or abnormal oscillation.
12) Please design the output lines by characteristic impedance 50 Ω and try to make the output lines as short as possible. A long output line may cause irregular output.
    Other high level signal lines may cause incorrect operation, so please do not place high-level signal line close to this device.
13) When not use OE pin connection, please use connecting to Vcc.
    We recommend installation of a resistor in between to mitigate effect by surge etc.
14) If output pin is connected to the ground when supply voltage apply to product, the internal elements can be destroyed. So please use the products that always have connection with load resistance.
15) Aging in the frequency tolerance is from environmental tests results to the expectation of the amount of the frequency variation. This doesn't guarantee the product-life cycle.

TAPING SPECIFICATION

I. Application

This document is applicable to VG-45**CA / VG7050E*N / SG-77****

Ⅱ. Contents

Item No	Item	Item
[1]	Taping specification	1 to 2
[2]	Inner carton	3
[3]	Shipping carton	4
[4]	Marking	
[5]	Quantity	
[6]	Storage environment	

[1] Taping specification

(1) Tape dimensions

Material of the carrier tape : PS conduct

Material of the top tape : PET

(2) Reel form

Material of the reel : PS conduct

(3) Taping packing

Depends on Figure 1

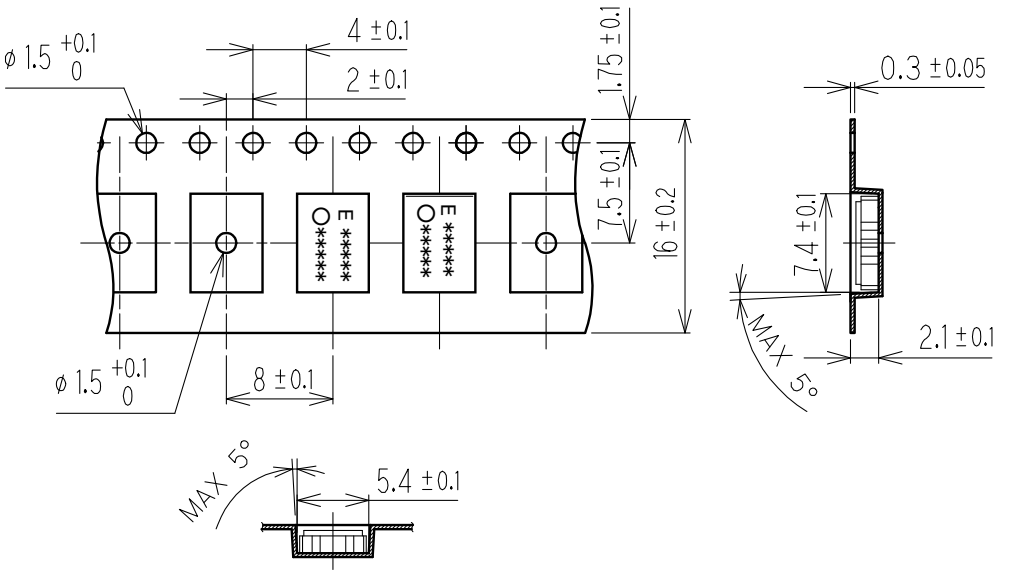

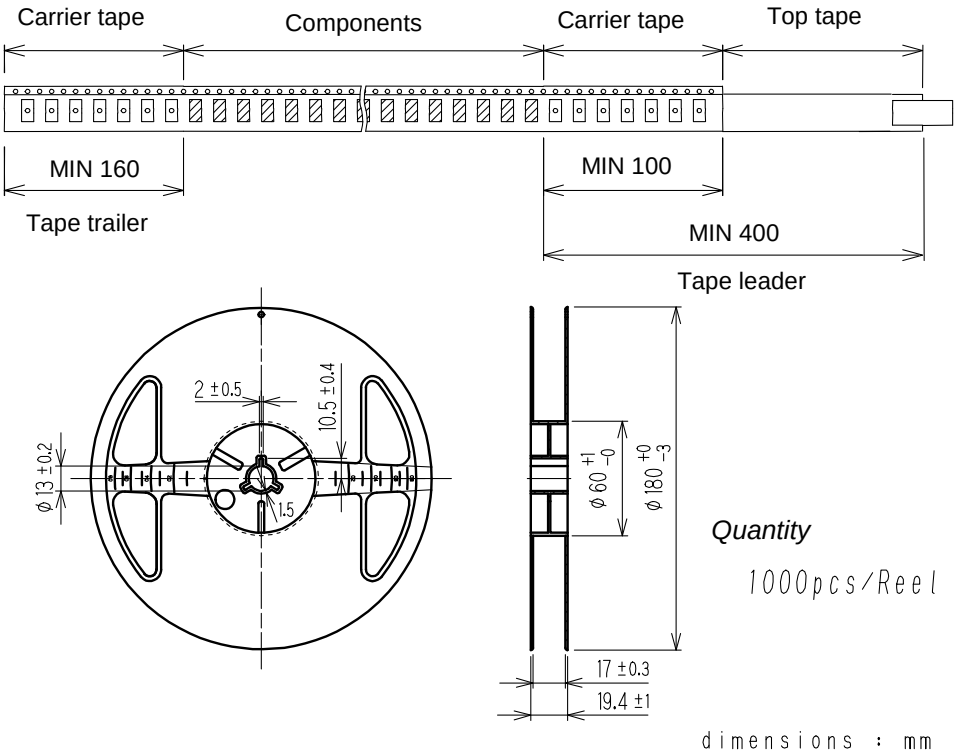

Figure 1 taping

[2] Inner carton

(1) Sticks label on to the reel.

(2) Pack reels into the antistatic bag. And seal the antistatic bag.

(3) Sticks label on the Exterior box
Box up products that are lagged with bentonite without moving. Then seal the box.

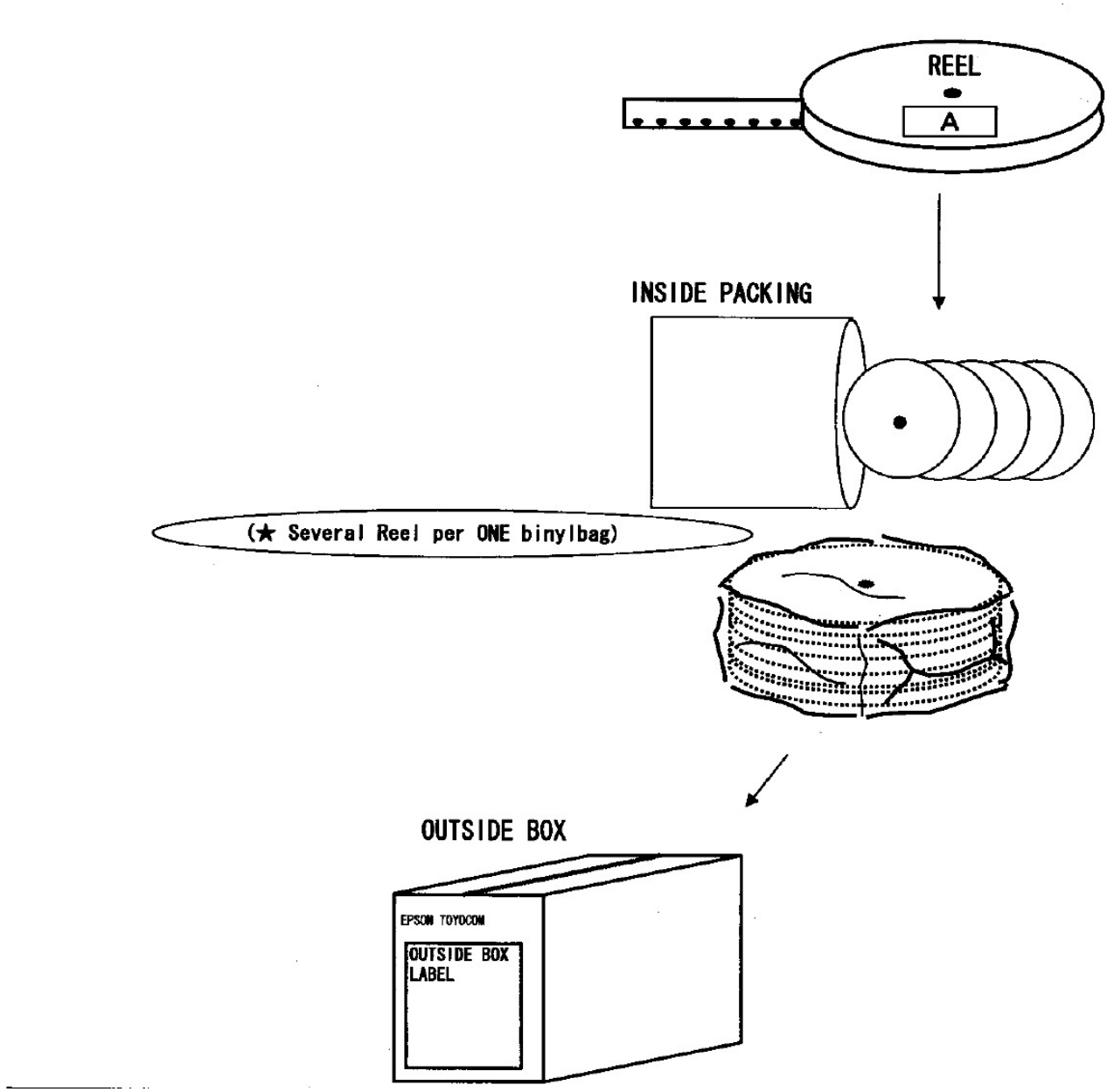

[3] Marking

1) Reel label

Label is put on the reel

Item

(1) Parts No.
(2) P/O
(3) Parts name Frequency
(4) LF(Pb free)
(5) Order No.
(6) Quantity
(7) Lot No.
(8) epsontoyocom's No.
(9) Shipment date

2) Shipping carton marking

・Shipping carton marking shall consist of :

1) Parts name
2) Quantity

[4] Quantity

・1000 pcs./reel

[5] Storage environment

(1) To storage the reel at 15℃ to 35℃, 25%RH to 85%RH of humidity.
(2) To open the packing just before using.
(3) Not to expose the sun.
(4) Not to storage with some erosive chemicals.
(5) Nothing is allowed to put on the reel or carton to prevent mechanical damage.

[6] Handling

(1) To handle with care to prevent the damage of tape, reel and products.
(2) Please do not have one side of the reel alone.
There is unusually a thing that comes off from an inside wick according to handling.