GRGBanking Equipment CO.,LTD

RECIPIENT

SPECIFICATIONS

Product No. : X1G000221015900

MODEL : TCO-7086X1A4

SPEC. No. : A15-651-0A

DATE: Jun. 27. 2015

SEIKO EPSON CORPORATION

8548 Naka-minowa
Minowa-machi Kamiina-gun
Nagano-ken
399-4696 Japan

CHECKED _____ / TD･CS Quality Assurance Department Manager
Yasushi Hiraizumi

PREPARED _____ / TD･CS Quality Assurance Department Senior Staff
Emi Oguchi

SPECIFICATIONS

1. Application

This document is applicable to the crystal oscillator that is delivered to GRGBanking Equipment CO.,LTD from Seiko Epson Corp.

This product is compliant with RoHS Directive.

This Product supplied (and any technical information furnished, if any) by Seiko Epson Corporation shall not be used for the development and manufacture of weapon of mass destruction or for other military purposes. Making available such products and technology to any third party who may use such products or technologies for the said purposes are also prohibited.

This product listed here is designed as components or parts for electronics equipment in general consumer use. We do not expect that any of these products would be incorporated or otherwise used as a component or part for the equipment, which requires an extra high reliability, such as satellite, rocket and other space systems, and medical equipment, the functional purpose of which is to keep life.

2. Product No. / Model

The product No. of this crystal oscillator unit is X1G000221015900.
The model is TCO-7086X1A4.

3. Packing

It is subject to the packing standard of Seiko Epson Corp.

4. Warranty

Defective parts which are originated by us are replaced free of charge in case defects are found within 12 months after delivery.

5. Amendment and abolishment

Amendment and/or abolishment of this specification are subject to the agreement between both parties.

6. Contents

Item No.	Item	Page
[1]	Absolute maximum ratings	2
[2]	Operating range	2
[3]	Frequency characteristics	2
[4]	Terminal assignment	3
[5]	Electrical characteristics	4
[6]	Test circuit	5
[7]	Timing chart	6
[8]	Environmental and mechanical characteristics	7
[9]	Dimensions and marking layout	8
[10]	Recommendable patterning	9
[11]	Notes	10,11

[1] Absolute maximum ratings

Parameter	Symbol	Value	Unit	Note
Supply voltage	Vcc-GND	-0.5 to +6.0	V	
Input voltage	V_{IN}	-0.5 to V_{CC}+0.5	V	
Output voltage	V_{out}	-0.5 to V_{CC}+0.5	V	
Output voltage	V_{out}	+/-25	mA	
Storage temperature range *	T_stg	-55 to +125	°C	Stored as bare product after unpacking.

* Please see attached environmental and mechanical characteristics, page 6.

[2] Operating range

Parameter	Symbol	Value			Unit	Note
		Min.	Typ.	Max.		
Supply voltage	Vcc	2.970	3.300	3.630	V	[*1]
		3.135	3.300	3.465	V	[*2]
Supply voltage	GND	0.0	-	0.0	V	
Input voltage	V_{IN}	GND	-	Vcc	V	
Output frequency	fo		48		MHz	
Operating temperature range	T_use	-40	-	+85	°C	
Output load condition	L_{CMOS}	-	-	15	pF	

[*1] Frequency stability applies to 50ppm over.
[*2] Frequency stability applies to below 50ppm.

[3] Frequency characteristics

1) Output frequency (fo) ..... 48 MHz

Parameter	Symbol	Value	Unit	Note
Frequency tolerance *	f_tol (OSC)	6X1A4 : $\pm 50 \times 10^{-6}$	-	T_use = -40 °C ~ +85 °C
Aging	f_aging	$\pm 5 \times 10^{-6}$	-	T_use =+25 °C,Vcc=3.3V, 1years

* This includes initial frequency tolerance, temperature characteristics and input voltage characteristics.

[4] Terminal assignment

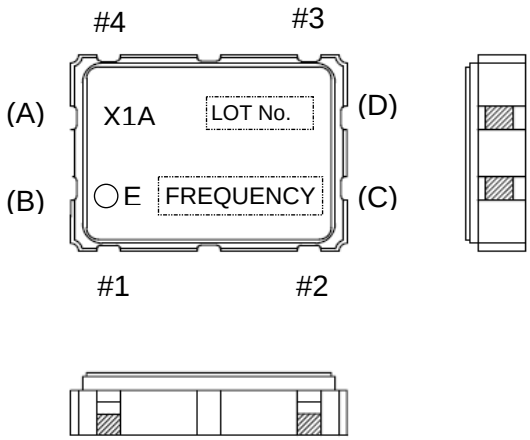

Name	No.	Type	Terminal description
$\overline{ST}$	#1	INPUT	Stand by control terminal Function / Osc.circuit / Output status High or OPEN / Enable / Specified frequency is output Low / Disable / Output becomes Hi-Z
GND	#2	—	GND terminal
OUT	#3	OUTPUT	Clock out terminal
Vcc	#4	—	Vcc terminal

[5] Electrical characteristics

(Please see page 2 [2] Operating range)

Parameter	Symbol	Value			Unit	Note
		Min.	Type	Max.		
Oscillation start up time	t_{OSC}	-	-	10	ms	90 % Vcc to be 0 s
Current consumption	I_{OP}	-	-	20	mA	No load
Rise time *1	tr	-	-	6.0	ns	10 %V_{CC} → 90 %Vcc
Fall time *1	tr	-	-	6.0	ns	90 %V_{CC} → 10 %Vcc
Symmetry	SYM	40	-	60	%	50 %V_{CC} Level
High level output voltage	V_{OH}	90%Vcc	-	-	V	I_{OH} = -5.0 mA
Low level output voltage	V_{OL}	-	-	10 %Vcc	V	I_{OL} = 5.0 mA
High level input voltage	VIH	70 %Vcc	-	-	V	$\overline{ST}$ terminal
Low level input voltage	VIL	-	-	30 %Vcc	V	$\overline{ST}$ terminal
Disable time *2	tpxz	-	-	150	ns	$\overline{ST}$ terminal HIGH → LOW
Enable time *2	tpzx	-	-	10	ms	$\overline{ST}$ terminal LOW → HIGH

Please see [6] Test circuit.

*1 Please see [7] 1) Output waveform.

*2 Please see [7] 2) $\overline{ST}$ function and timing.

[6] Test circuit

1) Waveform observation

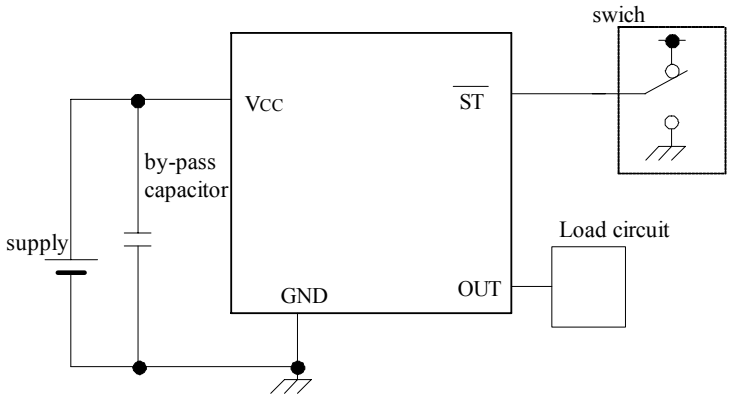

Load circuit load capacitance

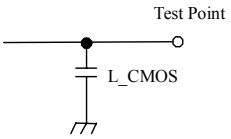

2) Current consumption

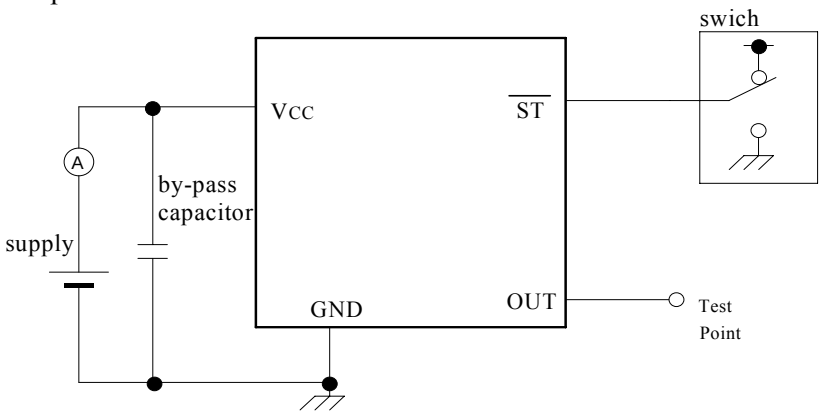

3) Condition

(1) Oscilloscope
- Bandwidth should be 5 times higher than DUT's output frequency.
- Probe ground should be placed closely from test point and lead length should be as short as possible.

(2) CL includes probe capacitance.

(3) By-pass capacitor (0.01 μF to 0.1 μF) is placed closely between Vcc and GND.

(4) Use the current meter whose internal impedance value is small.

(5) Power supply
- Impedance of power supply should be as low as possible.

[7] Timing chart

1) C-MOS load SMY= tw/t × 100 (%)

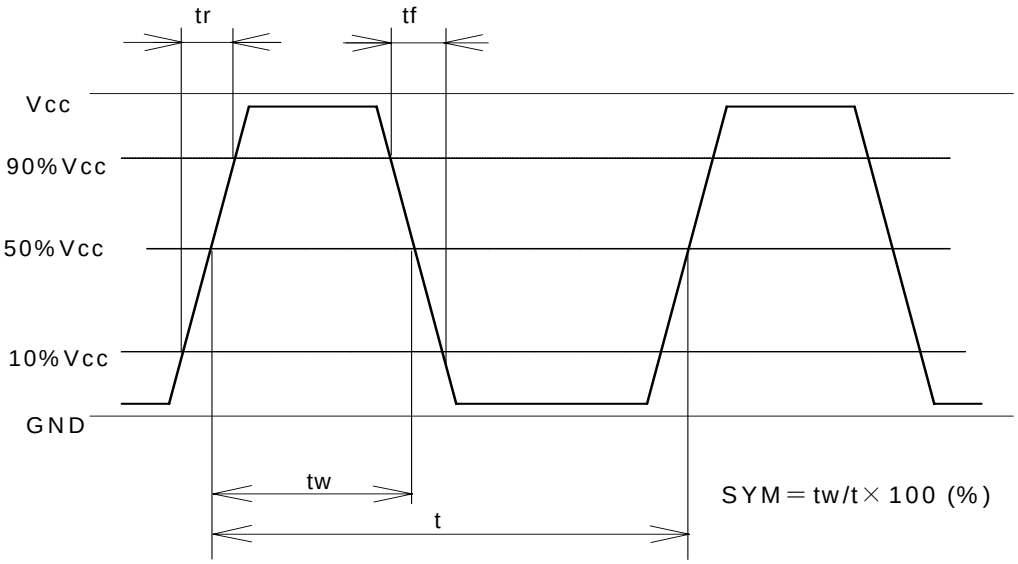

2) $\overline{ST}$ function and timing

$\overline{ST}$ input level	Oscillation	Oscillation
"H" or OPEN	Oscillation	Enable : Specified frequency is output
"L"	Oscillation stop	Disable : high impedance

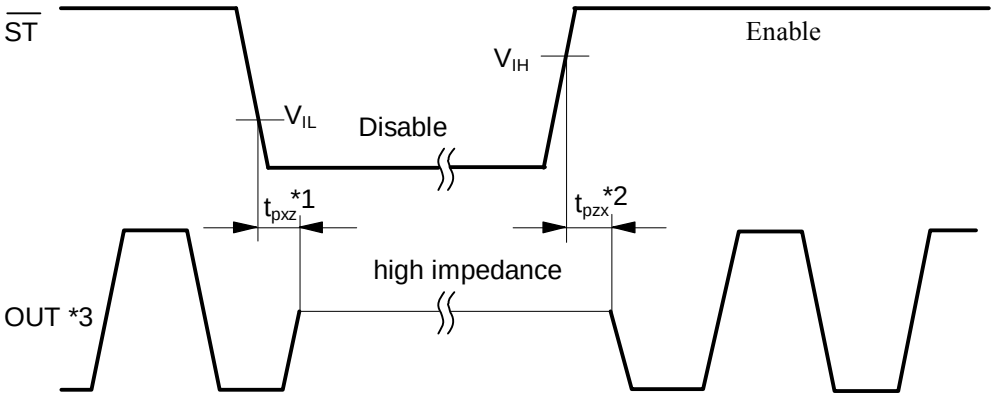

*1 The time taken from $\overline{ST}$=V_{IL} to OUT=Disable (high impedance).

*2 The time taken from $\overline{ST}$=V_{IH} to OUT=Enable.

Output start : V_{OH}≥90%V_{CC}, V_{OL}≤10 %V_{CC}, fout = fo±1 000×10^{-6}

[8] Environmental and mechanical characteristics

(The company evaluation condition we evaluate it by the following examination item and examination condition.)

No.	Item	Value *1		Test Conditions
		Δ f / f *2 [1 × 10^{-6}]	Electrical Characteristics	
1	High temperature storage	*3 ±20	Satisfy Item [5] after test.	+85 °C × 1 000 h
2	Temperature cycle	*3 ±10		-55 °C ↔ +125 °C 30 min. at each temperature 10 cycles
3	Temperature humidity	*3 ±10		+85 °C × 85 %RH × 250 h
4	Vibration	±10		10 Hz to 85 Hz amplitude 1.5 mm 85 Hz to 2 000 Hz acceleration 20G 10 Hz → 2 000 Hz → 10 Hz 20 min./cycle 12 h (4 h × 3 directions)
5	Shock	±10		5000G'S 0.3msec. 1/2 sine wave 3 shocks each plane.
6	Resistance to soldering heat	±10		Dip termination into solder bath at +260 ° C ± 10 °C for 5 to 10 s. (Using Rosin Flux)

< Notes >

*1 Each test done independently.

*2 Measuring 1 h to 24 h later leaving in room temperature after each test.

*3 Initial values shall be measured after 24 h storage at room temperature after Pre-treatment.
Pre-treatment: Reflow (3 times)

♦ Convection reflow conditions (Ref. IPC/JEDEC J-STD-020D.1)

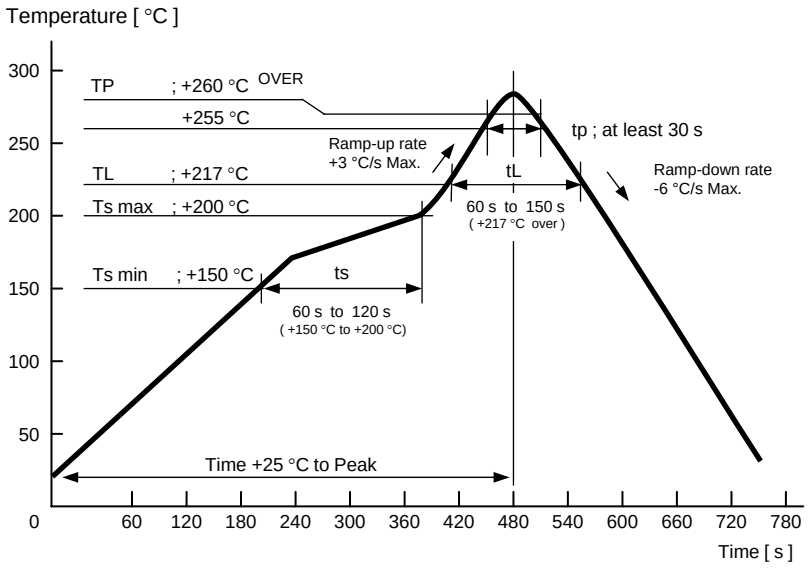

[9] Dimensions and marking layout

1) Dimensions

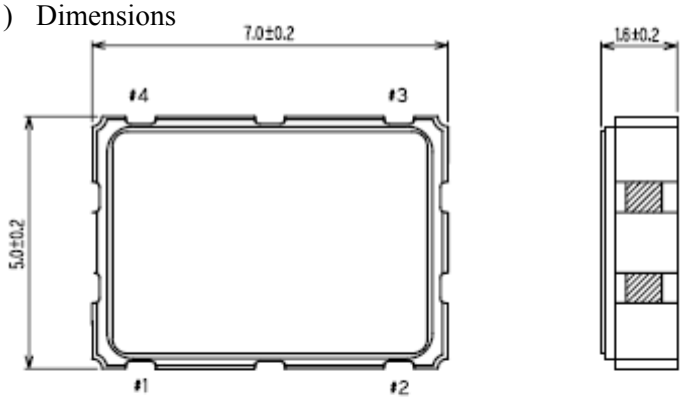



No	Name
1	$\overline{ST}$
2	GND
3	OUT
4	VCC

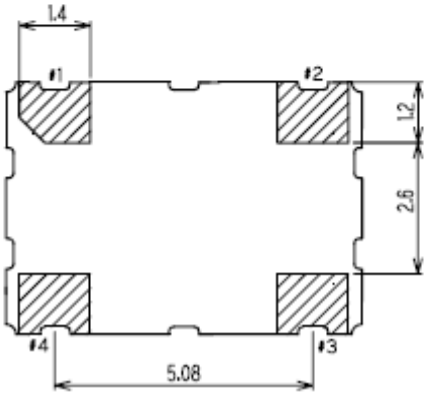

Terminal treatment : Au plating
Unit : mm

2) Marking layout

TCO-708x

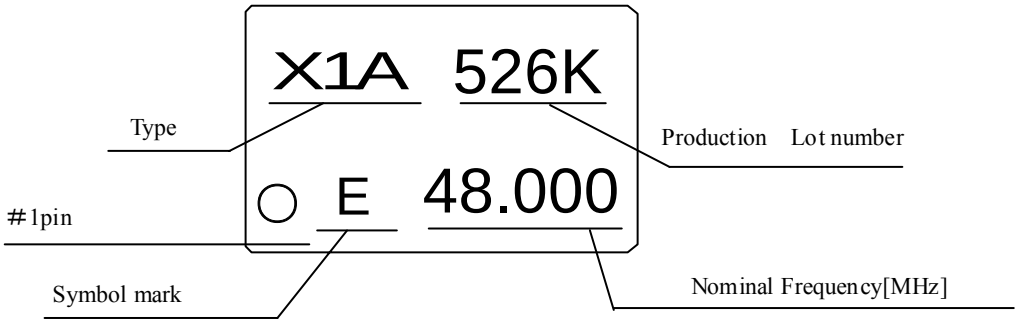

- ♦ The above marking layout shows only marking contents and their approximate position and it is not for font, size and exact position.
- ♦ We show output frequency to the third decimal place and round down the forth decimal place.

[10] Recommendable patterning

The soldering pad sample indicated as like following:

Soldering position (Unit : mm)

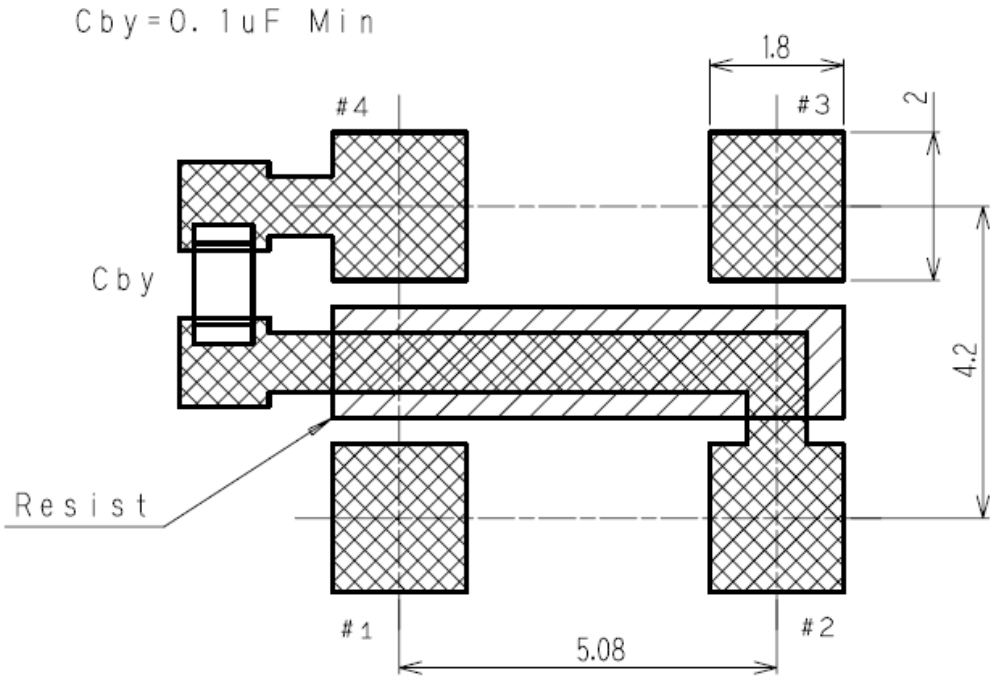

[11] Notes

1) This device is made with C-MOS IC.
Please take necessary precautions to prevent damage due to electrical static discharge.

2) Seiko Epson recommends a 0.01 μF to 0.1 μF capacitor must be connected near Vcc between Vcc and GND to obtain stable operation and protect against power line ripple. (see 11)

3) Vcc and GND pattern shall be as large as possible so that high frequency impedance shall be small.

4) Seiko Epson cannot recommend to put filtering element into power line so as to reduce noise. Oscillator might be unstable oscillation because high frequency impedance of power line become higher. When use filtering element, please verify electrical construction and or element's spec.

5) Seiko Epson doesn't recommend to power on from intermediate electric voltage or extreme fast power on. Those powering conditions may cause no oscillation or abnormal oscillation.

6) Power ripple: 200 mV P-P max. Start up time (0 %Vcc→90 %Vcc) of power source should be more than 150 μs.

7) A long output line may cause irregular output, so try to make the output line as short as possible.

8) Other high-level signal lines may cause incorrect operation, so please do not place high level signal line close to this device.

9) This device contains a crystal resonator, so please don't expose excessive shock or vibration.
Seiko Epson recommends store device under normal temperature and humidity to keep the specification.

10) An automatic insertion is available, however, the internal crystal resonator might be damaged in case that too much shock or vibration is applied by machine condition.
Be sure to check your machine condition in advance.

11) Ultrasonic cleaning can be used on the TCO-708x, however, since the oscillator might be amaged under some conditions, please exercise in advance.

12) Seiko Epson recommends to use and store under room temperature and normal humidity to secure frequency accuracy and prevent moisture.

13) Metal cap of this product is connected to GND. Please don't apply electrical voltage.

14) Side leads (A) to (D) are connected to IC internally.
Therefore be careful for short or a fall of insulation resistance etc.

15) Recommendation reflow times are less than 2 times.
When there was a soldering error, please do alteration with a soldering iron.
In this case, the iron ahead is equal to or less than +350 °C and asks within 5 s.
In case that this device is reflow soldered on the back side of your circuit board, please carefully verify the device is properly secured to prevent coming detached from card.

[About soldering method]

Soldering method	OK or NG
Reflow soldering (top side)	OK
Reflow soldering (back side)	Please carefully verify the device is properly secured to prevent coming detached from card.
Solder pot (static solder pot / flow solder pot)	NG
Iron soldering	OK

TAPING SPECIFICATION

Ⅰ. Application

This standard will apply to 7×5 Ceramic package.

Spec：CA package

Ⅱ. Contents

Item No.	Item	Page
〔1〕	Taping specification	1 to 2
〔2〕	Inner sleeve	3
〔3〕	Shipping carton	
〔4〕	Marking	4
〔5〕	Quantity	
〔6〕	Storage environment	
〔7〕	Handling	

〔1〕 Taping specification

Subject to「EIA-481」and「IEC-60286」

(1) Tape dimensions TE-1612L

Material of the carrier tape : PS

Material of the top tape : PET

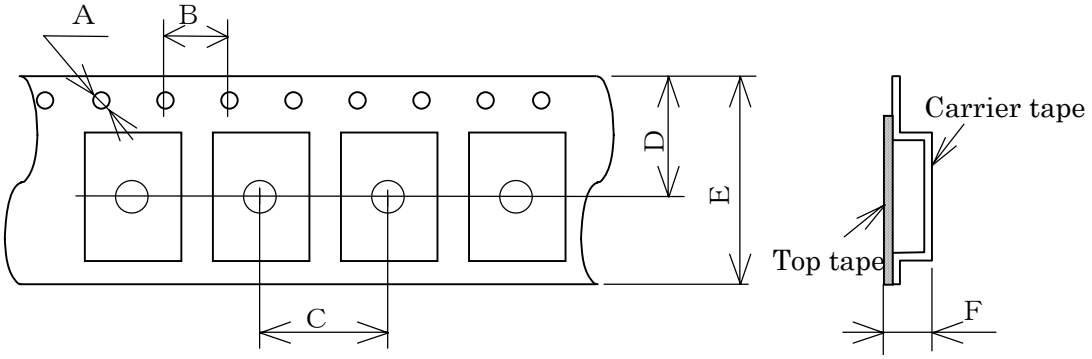

Symbol	A	B	C	D	E	F
Value	ϕ 1.5	4.0	8.0	9.25	16.0	2.3

Unit : mm

(2) Reel dimensions

Material of the reel : Conductive polystyrene

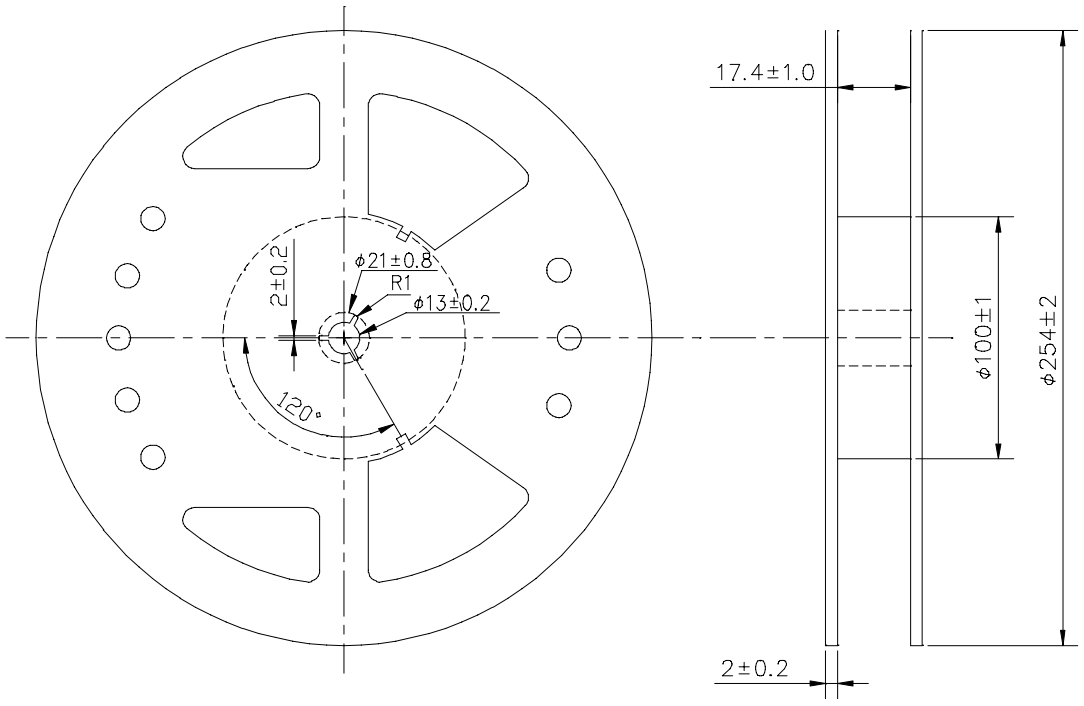

(3) Packing

①Tape & reel

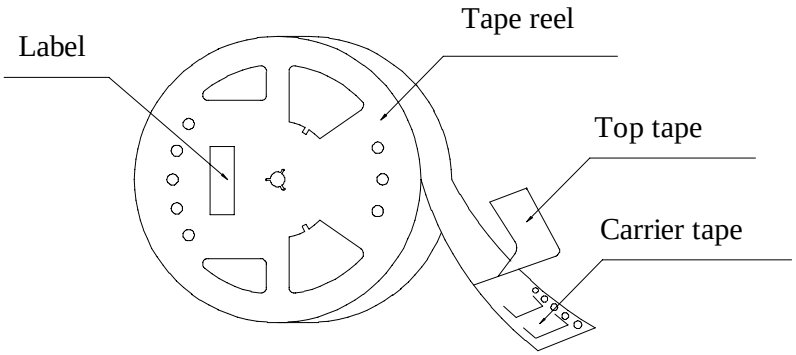

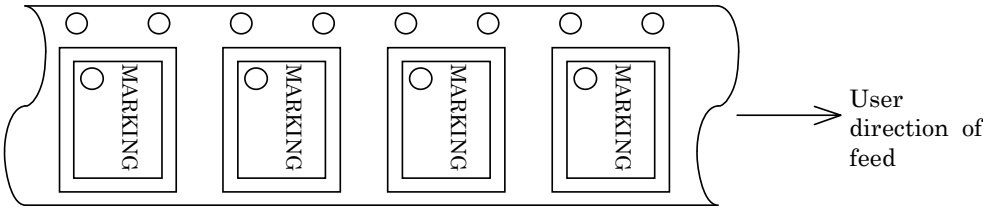

②Start & end point

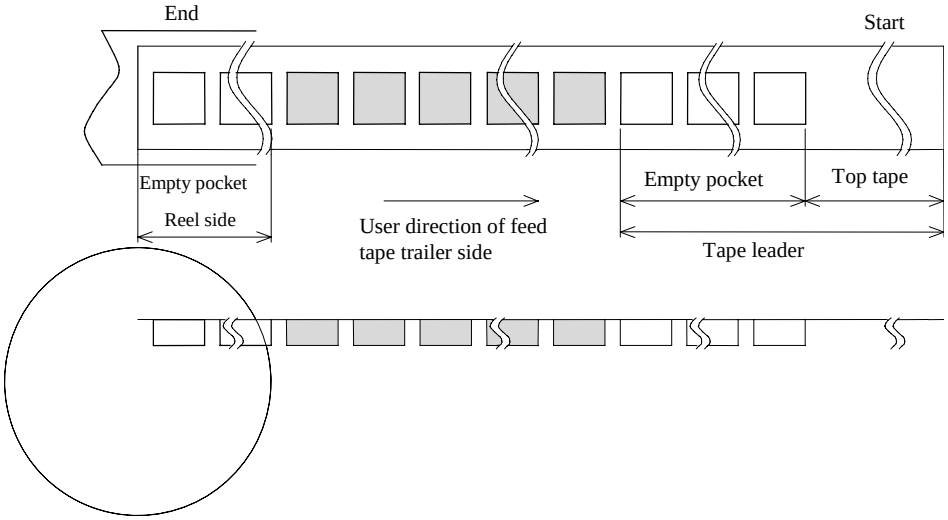

Item		Empty space
Tape leader	Top tape	Min. 1 000 mm
	Carrier tape	Min. 160 mm
Tape trailer	Top tape	Min. 0 mm
	Carrier tape	Min. 160 mm

(4) Peel force of the cover tape

① angle : cover tape during peel off and the direction of unreeling shall be 165° to 180°.

② peel speed : 300 mm / min.

〔2〕 Inner sleeve

a) Packing to antistatic bag

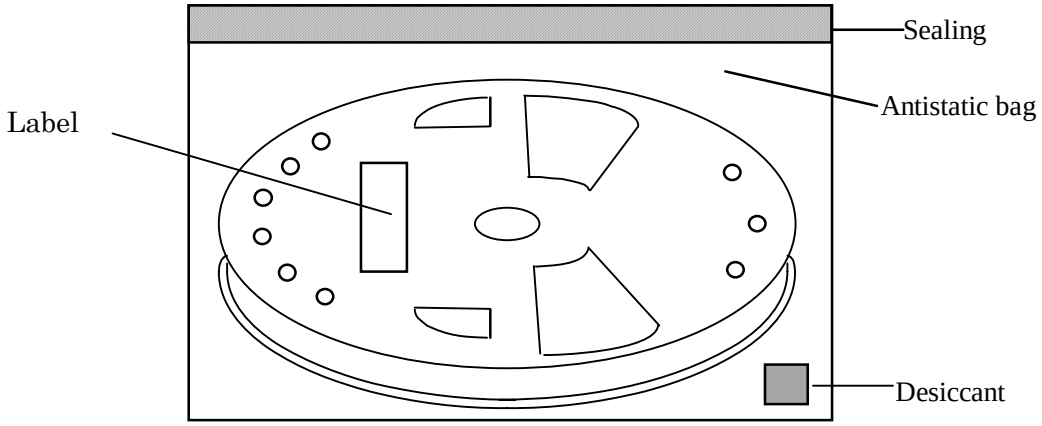

b) Packing to inner sleeve

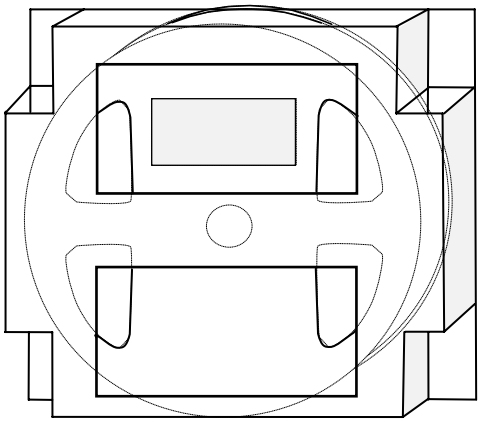

〔3〕 Shipping carton

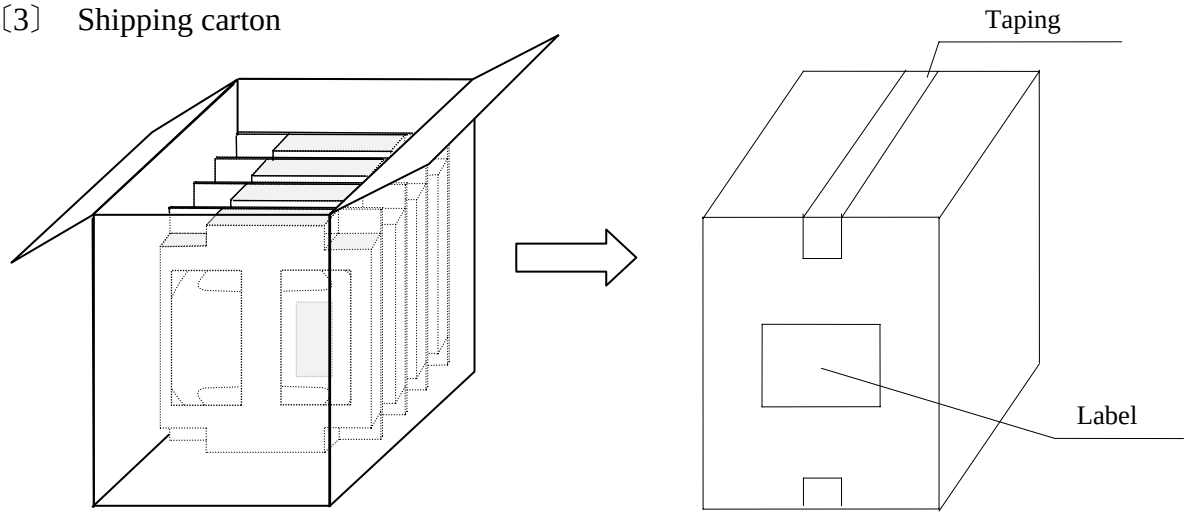

〔4〕 Marking

(1) Reel marking

・Reel marking shall consist of :

1) Parts name
2) Quantity
3) Manufacturing date or symbol
4) Manufacturer's date or symbol
5) Others (if necessary)

(2) Shipping carton marking

・Shipping carton marking shall consist of :

1) Parts name
2) Quantity

〔5〕 Quantity

・1 000 pcs./reel

〔6〕 Storage environment

(1) Before open the packing, we recommend to keep less than +30 ℃ and 85 %RH of Humidity, and to use it less than 6 months after delivery.

(2) We recommend to open Package in immediately before use. After open Package, We recommend to keeps less than 6 month. No need dry air before soldering work if it is less than temperature +30 °C, 85 humidity %RH.

(3) Not to expose the sun.

(4) Not to storage with some erosive chemicals.

(5) Nothing is allowed to put on the reel or carton to prevent mechanical damage.

〔7〕 Handling

・To handle with care to prevent the damage of tape, reel and products.

- PROCESS QUALITY CONTROL -

No. 708x - 00 - ASE - 3　　CRYSTAL OSCILLATOR : TCO-708x***

TCO708x***_Q_0001
'12.03.02

Manufacturing process chart	No.	Section In Charge	Standards	Inspection, Control Item	Instruments	Inspection Methods	Record
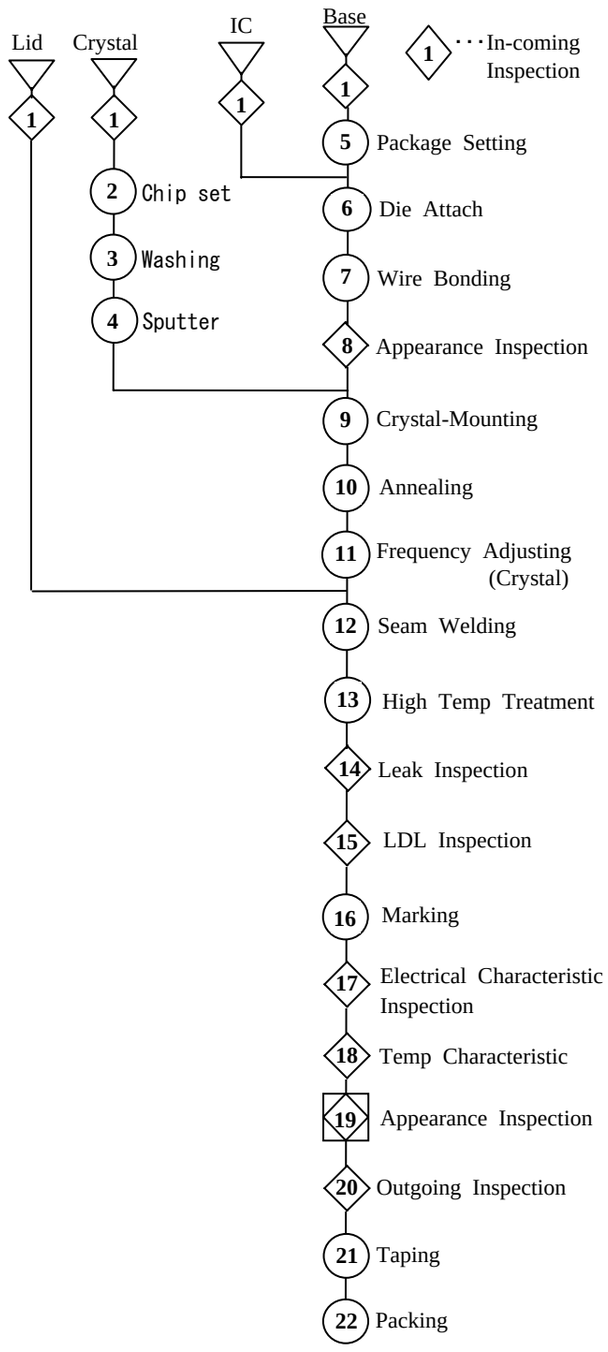	1	Inspection Section	Purchasing Specification Incoming Inspection Standard	Appearance Dimension	Microscope	Sampling	Data sheet
	2	Production Section	Manufacturing Instruction Sheet	Appearance	Microscope	100% Inspection	Data sheet
	3	Production Section	Manufacturing Instruction Sheet	Appearance	Microscope	Sampling	Data sheet
	4	Production Section	Manufacturing Instruction Sheet	Frequency Appearance	Blank OSC Microscope	Sampling 100% Inspection	Data sheet
	5	Production Section	Manufacturing Instruction Sheet	Appearance	Microscope	Sampling	Data sheet
	6	Production Section	Manufacturing Instruction Sheet	Appearance	Microscope	Sampling	Data sheet
	7	Production Section	Manufacturing Instruction Sheet	Bonding strength	Gauge	Sampling	Data sheet
	8	Production Section	Manufacturing Instruction Sheet	Appearance	Microscope	100% Inspection	Data sheet
	9	Production Section	Manufacturing Instruction Sheet	Appearance	Microscope	Sampling 100% Inspection	Data sheet
	10	Production Section	Manufacturing Instruction Sheet	Appearance	Microscope	Sampling	Data sheet
	11	Production Section	Manufacturing Instruction Sheet	Frequency	Counter	Sampling	Data sheet
	12	Production Section	Manufacturing Instruction Sheet	Appearance Frequency	Microscope Counter	Sampling Sampling	Data sheet
	13	Production Section	Manufacturing Instruction Sheet	Temperature	Thermometer	One／Day	Check sheet
	14	Production Section	Manufacturing Instruction Sheet	Leakage Inspection	Measuring equipment	100% Inspection	Data sheet
	15	Production Section	Manufacturing Instruction Sheet	Characteristic Inspection	Measuring equipment	100% Inspection	Data sheet
	16	Production Section	Manufacturing Instruction Sheet	Appearance	Visual inspection	Sampling	Data sheet
	17	Production Section	Manufacturing Instruction Sheet	Electrical Characteristic	Measuring equipment	100% Inspection	Data sheet
	18	Production Section	Manufacturing Instruction Sheet	Temp Characteristic	Measuring equipment	Sampling	Data sheet
	19	Production Section	Manufacturing Instruction Sheet	Appearance	Microscope	100% Inspection	Data sheet
	20	Inspection Section	Delivery Specifications Outgoing Inspection Standard	Electrical Characteristic Appearance	Measuring equipment Microscope	Sampling	Data sheet
	21	Production Section	Manufacturing Instruction Sheet	Tape peeling Strength	Peeling strength test machine	Sampling	Data sheet
	22	Production Control Section	Manufacturing Instruction Sheet Daily Shipping List	Customers Type Quantity	—	—	Delivery Slip

Structure Diagram 構造図

Model 型式	**TCO-708x**	
Document No. 管理№	G0709-01-01	TCO-708x_D_0001

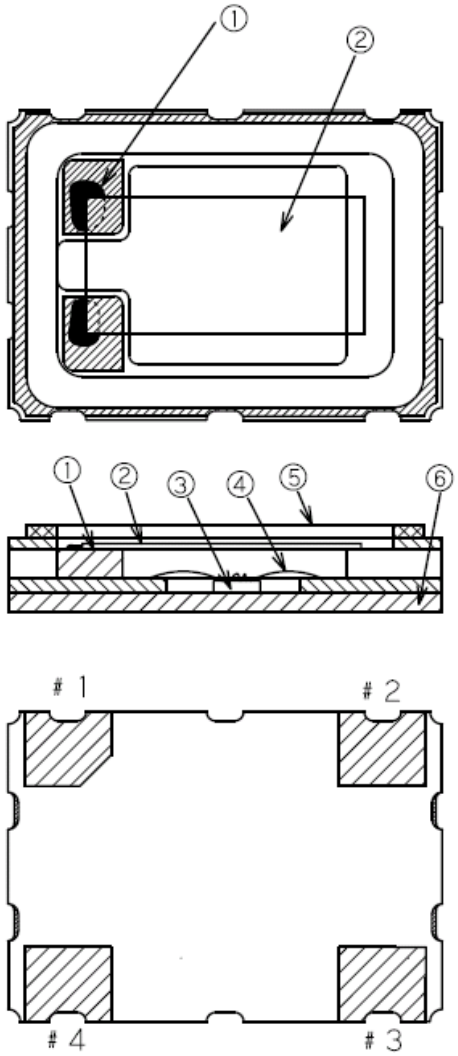

No.	Name of Part 部品名
⑥	Package ﾊﾟｯｹｰｼﾞ
⑤	Lid ﾘｯﾄﾞ
④	Bonding Wire ﾎﾞﾝﾃﾞｨﾝｸﾞﾜｲﾔｰ
③	IC IC
	IC Conductive Adhesive IC ﾏｳﾝﾄ材
②	Crystal Chip 水晶振動子
①	Crystal adhesive 水晶振動子ﾏｳﾝﾄ材

RELIABILITY TEST DATA

Product Name : TCO-708* series

The Company evaluation condition

We evaluate environmental and mechanical characteristics by the following test condition . **No. G-0709X1-01-001E**

No.	ITEM	TEST CONDITIONS	VALUE *1		TEST Qty [n]	FAIL Qty [n]
			Δ f / f *2 [1 × 10^{-6}]	Electrical characteristics		
1	High temperature storage	+85 °C± 3 °C × 1 000 h ＊JIS-C-0021	*3 ± 10	Satisfy specification after test	22	0
2	Low temperature storage	-40 °C± 3 °C × 1 000 h	*3 ± 10		22	0
2	Temperature cycle	-55 °C ⇔ +125 °C 30 min at each temp. 10 cycles *MIL-STD-883D 1010.7(B)	*3 ± 10		22	0
3	Temperature humidity	+85 ℃±2 ℃× 85 %RH±5 %RH × 250 h	*3 ± 10		22	0
4	Vibration	MIL-STD-202E Method 205E Condition(D) •Frequency: 10 to 85 Hz amplitude 1.5 mm : 85 to 2000 Hz ··· 20G •Duration time ··· 4 hours in X, Y, Z (Total of 12 hours)	± 10		22	0
5	Shock	5000 G'S 0.3msec. 1/2 sine wave 3 shocks each plane.	± 10		22	0
6	Resistance to soldering heat	Dip termination into solder bath at +260 °C ± 10 °C for 10 s. *MIL-STD-202E Method 210A(A) (Using Rosin Flux)	± 10		22	0

Notes

1. *1 Each test done independently.
2. *2 Measuring 2 h to 24 h later leaving in room temperature after each test.
3. *3 Initial value shall be measured after 24 h storage at room temperature after pre-conditioning.
   Pre-conditioning: Reflow (3 time)

Qualification Data

Product Name : TCO-708* series

Δf / f

No. G-0709X1-01-001E

1. High temperature storage

+85 °C × 1 000 h

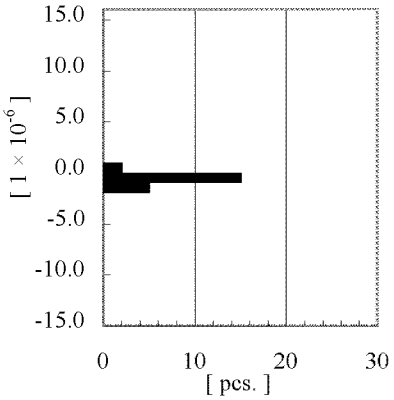

2. Low temperature storage

-40 °C × 1 000 h

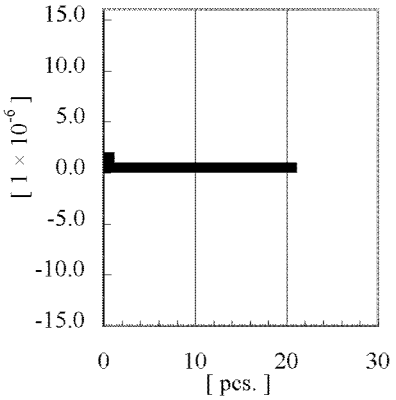

3. Temperature cycle

-55 ℃⇔ +125℃× 10cyc.

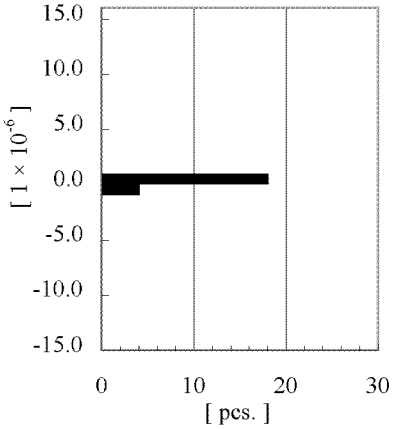

4.Temperature humidity

+85 ℃× 85 %RH × 250 h

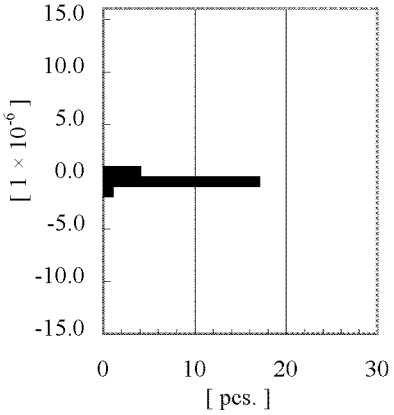

5. Vibration

10 Hz to 85 Hz amplitude 1.5 mm

85 Hz to 2000 Hz acceleration 196 m/s^2

20 min / cycle 12 times × 3 directions

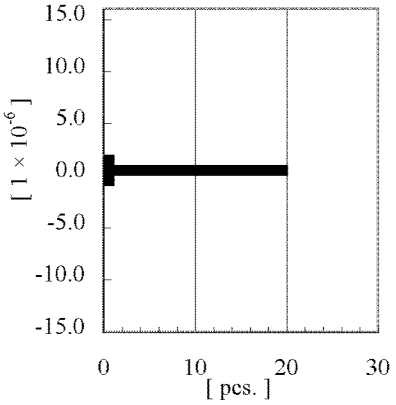

6. Shock

5,000G, 0.3ms,

3times ×3directions

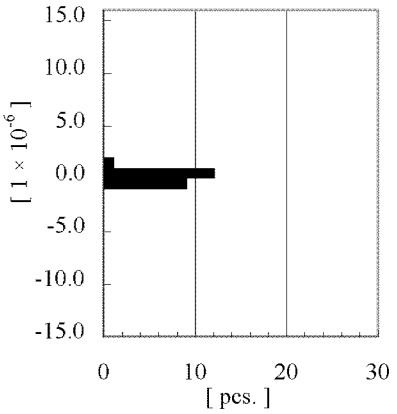

7. Resistance to soldering heat

260℃±10℃, 10sec

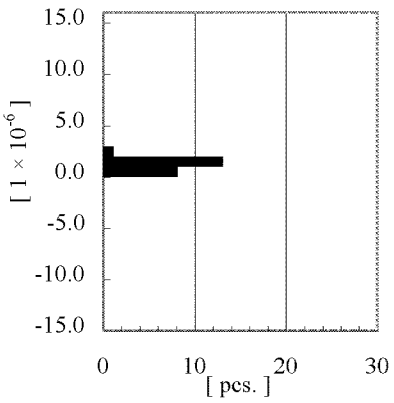

Qualification Data