INFORMATION

MODEL : **SG-8002CA**

INFO. No. : **A14-836-1A**

DATE : **Sep. 25. 2014**

SEIKO EPSON CORPORATION

8548 Naka-minowa
Minowa-machi Kamiina-gun
Nagano-ken
399-4696 Japan

INTRODUCTION

1. The contents is subject to change without notice.
   Please exchange the specification sheets regarding
   the product's warranty.

2. This sheet is not intended to guarantee or provide
   an approval of implementation of industrial patents.

3. We have prepared this sheet as carefully as possible.
   If you find it incomplete or unsatisfactory in any
   respect, We would welcome your comments.

This product complies with RoHS Directive.

This Product supplied (and any technical information furnished, if any) by Seiko Epson Corporation shall not be used for the development and manufacture of weapon of mass destruction or for other military purposes. Making available such products and technology to any third party who may use such products or technologies for the said purposes are also prohibited.

This product listed here is designed as components or parts for electronics equipment in general consumer use. We do not expect that any of these products would be incorporated or otherwise used as a component or part for the equipment, which requires an extra high reliability, such as satellite, rocket and other space systems, and medical equipment, the functional purpose of which is to keep life.

Model

The model is SG-8002CA PH.

Contents

Item No.	Item	Page
[1]	Absolute maximum ratings	2
[2]	Operating range	2
[3]	Frequency characteristics	2
[4]	Terminal assignment	3
[5]	Electrical characteristics	4
[6]	Test circuit	5
[7]	Timing chart	6
[8]	Environmental and mechanical characteristics	7
[9]	Dimensions and marking layout	8
[10]	Notes	9
[11]	Recommendable patterning	10

[1] Absolute maximum ratings

Parameter	Symbol	Value	Unit	Note
Supply voltage	V_{DD}-GND	-0.5 to +7.0	V	
Storage temperature *	T_{STG}	-55 to +125	°C	Stored as bare product after unpacking.
Input voltage	V_{IN}	-0.5 to V_{DD}+0.5	V	

* Concerning the frequency change, please refer page 7 [8] Environmental and mechanical characteristics.

[2] Operating range

Parameter	Symbol	Value			Unit	Note
		Min.	Typ.	Max.		
Supply voltage	V_{DD}	4.5	5.0	5.5	V	
Supply voltage	GND	0.0		0.0	V	
Input voltage	V_{IN}	GND		V_{DD}	V	
Nominal frequency	fo	1		125	MHz	Ta=-20 °C to +70 °C、CL=25 pF
		1		66.7		Ta=-20 °C to +70 °C、CL=50 pF
		1		55		Ta=-40 °C to +85 °C、CL=15 pF
		1		40		Ta=-40 °C to +85 °C、CL=25 pF
Operating temperature	T_{OPR}	-40		+85	°C	1.0 MHz≤fo≤55 MHz、CL=15 pF 1.0 MHz≤fo≤40 MHz、CL=25 pF
		-20		+70		1.0 MHz≤fo≤66.7 MHz、CL=50 pF 1.0 MHz≤fo≤125 MHz、CL=25 pF
Output load	CL			50	pF	1.0 MHz≤fo≤66.7 MHz、Ta=-20 °C to +70 °C
				25		1.0 MHz≤fo≤125 MHz、Ta=-20 °C to +70 °C 1.0 MHz≤fo≤40 MHz、Ta=-40 °C to +85 °C
				15		1.0 MHz≤fo≤55 MHz、Ta=-40 °C to +85 °C

• Start up time(0 %V_{DD}→90 %V_{DD}) of power source should be more than 150 μs.

[3] Frequency characteristics

1) Output frequency range ..... 1.0000 to 125.0000MHz
2) Output frequency fo ..... Please see page 12. (Output frequency list)

(GND=0.0 V, Load CL ≤ Max.)

Parameter	Symbol	Value[1×10^{-6}]	Note
Frequency stability *	Δ f/fo	B : ± 50	Ta=-20 °C to +70 °C
		C : ± 100	Ta=-20 °C to +70 °C
		M : ± 100	Ta=-40 °C to +85 °C
Aging	fa	± 5 (Typ.-3)	Ta=+25 °C, V_{DD}=5.0 V First year

* This includes initial frequency tolerance, temperature characteristics, input voltage characteristics, and load characteristics, but excludes aging.

Note. Please contact us for inquiries about output frequency.

[4] Terminal assignment

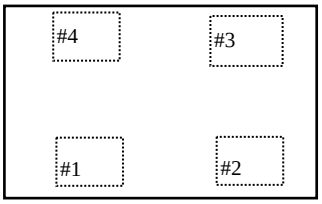

Terminal name	Terminal No.	Terminal type.
OE	1	INPUT
GND	2	—
OUT	3	OUTPUT
V_{DD}	4	—

OE pin : High or open. → Specified frequency output = enable.
OE pin : Low. → Output is high impedance = disabled.

[5] Electrical characteristics

(Please see page 2 [2] Operating range V_{DD}=5.0 V±0.5 V,GND=0.0 V)

Parameter	Symbol	Value		Unit	Note
		Min.	Max.		
Start up time	t_{OSC}		10	ms	
Current consumption	I_{OP}		45	mA	No load (fo=125 MHz)
Disable current	I_{OE}		30	mA	OE=GND(fo=125 MHz)
Output rise time *1	tr		3.0	ns	20 %V_{DD} → 80 %V_{DD}、CL≤ 25 pF
			4.0		20 %V_{DD} → 80 %V_{DD}、CL≤ 50 pF
Output fall time *1	tf		3.0	ns	80 %V_{DD} → 20 %V_{DD}、CL≤ 25 pF
			4.0		80 %V_{DD} → 20 %V_{DD}、CL≤ 50 pF
Output duty *1	tw/t	40	60	%	50 %V_{DD} Level、 1.0 MHz ≤fo≤66.7 MHz, CL=50 pF
		45	55		50 %V_{DD} Level、 1.0 MHz ≤fo≤66.7 MHz, CL=25 pF
		40	60		50 %V_{DD} Level、 1.0 MHz ≤fo≤125 MHz, CL=25 pF
High level output voltage	V_{OH}	V_{DD}-0.4		V	I_{OH} = -16 mA
Low level output voltage	V_{OL}		0.4	V	I_{OL} = 16 mA
High level input voltage	V_{IH}	2.0		V	OE terminal
Low level input voltage	V_{IL}		0.8	V	OE terminal
Input current	I_{IH}	-5	5	μA	V_{IN} = V_{DD}
	I_{IL}		10	μA	V_{IN} = GND
Jitter (cycle to cycle)	tj		150	ps	33 MHz ≤fo≤125 MHz, CL=15 pF
			200		fo< 33 MHz, CL=15 pF
Jitter (peak to peak)			200		33 MHz ≤fo≤125 MHz, CL=15 pF
			250		fo< 33 MHz, CL=15 pF
Output disable time *2	tpxz		25	ns	OE terminal High → Low
Output enable time *2	tpzx		25	ns	OE terminal Low → High

[6] Test circuit

*1 [7] 1) Output waver form

*2 [7] 2) OE function and timing

◆Reference : Current consumption Typ. value (V_{DD} = 5.0V , Ta = +25°C , No load)

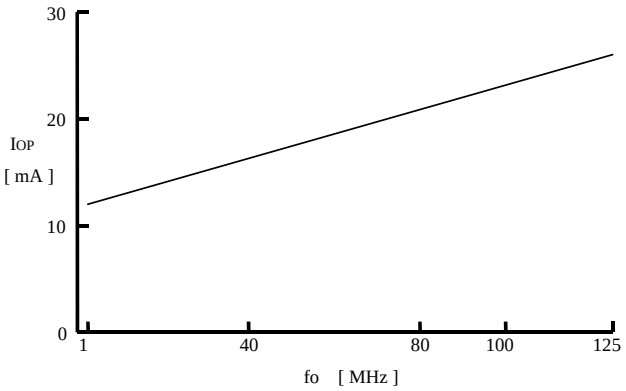

[6] Test circuit

1) Waveform observation

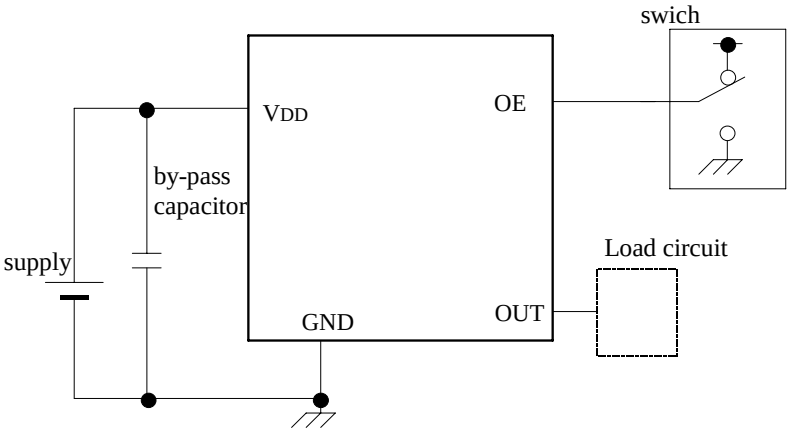

Load circuit load capacitance

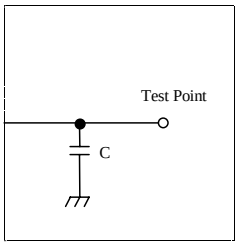

2) Current consumption

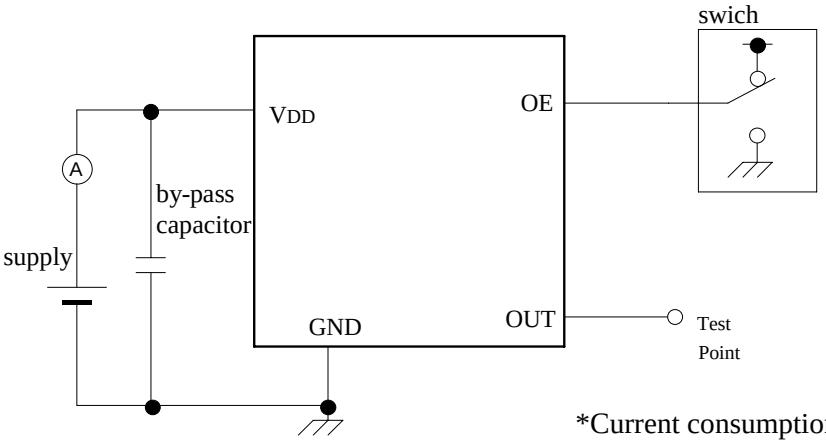

*Current consumption under the disable function should be OE = GND.

3) Condition

(1) Oscilloscope

- Band width should be minimum 5 times higher (wider) than measurement frequency.
- Probe earth should be placed closely from test point and lead length should be as short as possible.

* Recommendable to use miniature socket. (Don't use earth lead.)

(2) 'CL' includes probe capacitance.

(3) By-pass capacitor (0.01 μF to 0.1 μF) is placed closely between V_{DD} and GND.

(4) Use the current meter whose internal impedance value is small.

(5) Power supply

- Start up time (0 %V_{DD} → 90 %V_{DD}) of power source should be more than 150 μs.
- Impedance of power supply should be as lowest as possible.

[7] Timing chart

1) C-MOS load Duty = tw/t × 100 (%)

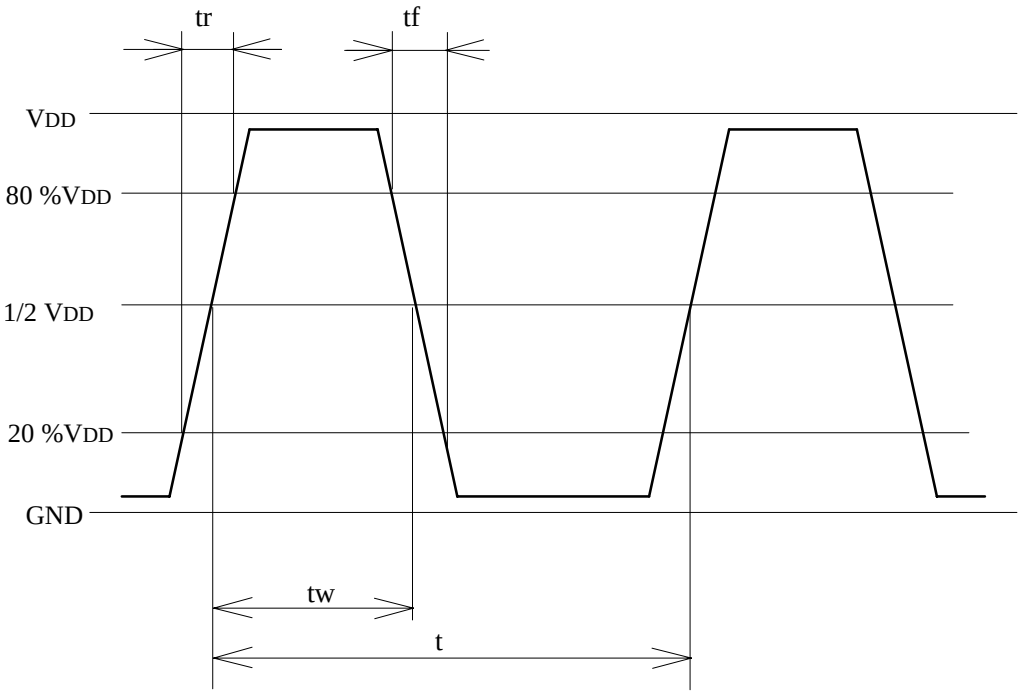

2) OE function and timing

OE function	Osc. circuit	Output status
High or Open	Oscillation	Specified frequency is output : Enable
Low	Oscillation	Output becomes high impedance : Disable

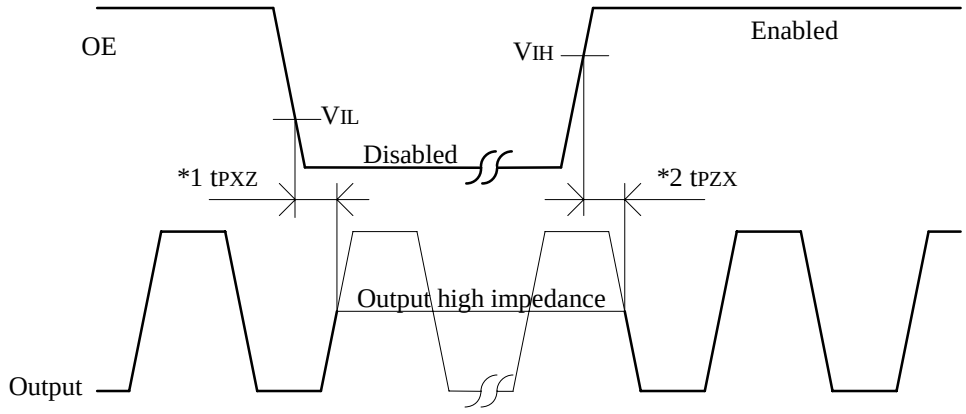

*1 The time taken from OE=VIL to output = Disable (high impedance)

*2 The time taken from OE=VIH to output = Enable

[8] Environmental and mechanical characteristics

(The company evaluation condition We evaluate it by the following examination item and examination condition.)

No.	Item	Value *1		Test Conditions
		$\Delta f / f$ *2 [1×10^{-6}]	Electrical characteristics	
1	High temperature storage	*3 ± 50	Satisfy Item [5] after test.	+125 °C × 1 000 h
2	Low temperature storage	*3 ± 10		-55 °C × 1 000 h
3	High temperature bias	*3 ± 20		a) +70 °C × 5.5 V × 1 000 h (1 MHz~125 MHz) b) +85 °C × 5.5 V × 1 000 h (1 MHz~55 MHz)
4	Low temperature bias	*3 ± 10		a) -20 °C × 5.5 V × 1 000 h (1 MHz~125 MHz) b) -40 °C × 5.5 V × 1 000 h (1 MHz~55 MHz)
5	Temperature humidity bias	*3 ± 20		+85 °C × 85 %RH × 5.5 V × 1 000 h
6	Temperature cycle	*3 ± 20		-55 °C ↔ +125 °C 30 min. at each temperature 100 cycles
7	Resistance to soldering heat	± 10		a) Infrared – reflow or convention reflow soldering furnace (2 time) b) Dip termination into solder bath at +260 °C ± 5 °C for 10 s , 2 times
8	Drop	± 20		Free drop from 750 mm height on a hard wooden board for 3 times (Board thickness is more than 30 mm)
9	Vibration	± 10		10 Hz to 55 Hz amplitude 0.75 mm 55 Hz to 500 Hz acceleration 98 m/s^2 10 Hz → 500 Hz → 10 Hz 15 min./cycle 6 h (2 hours , 3 directions)
10	Seal	1×10^{-9} Pa·m^3 / s		He leakage detector
11	Pull - off	No peeling-off at a solder part		10 N press for 10 s ± 1 s Ref. EIAJ ED-4702
12	Solderability	Termination must be 95 % covered with fresh solder		Dip termination into solder bath at +235 °C ± 5 °C for 5 s. (Using Rosin Flux)
13	Solvent resistance	The marking shall be legible		Ref. JIS C 0052 or IEC 60068-2-45

< Notes >

*1 Each test done independently.

*2 Measuring 2 h to 24 h later leaving in room temperature after each test.

*3 Initial value shall be measured after 24 h storage at room temperature after pre-conditioning.

Infrared-reflow soldering furnace

1.Pre heating temperature : Tp1 ~ Tp2 = +170 °C

2.Peak temperature must not exceed +260 °C and the duration of over +220 °C should be 35 s.

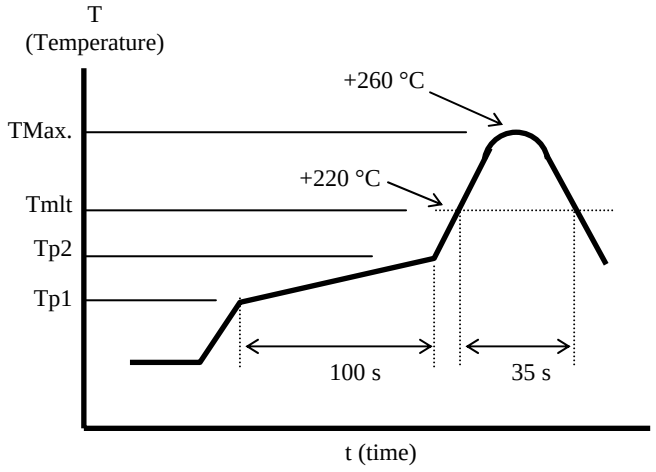

[9] Dimensions and marking layout

1) Dimensions

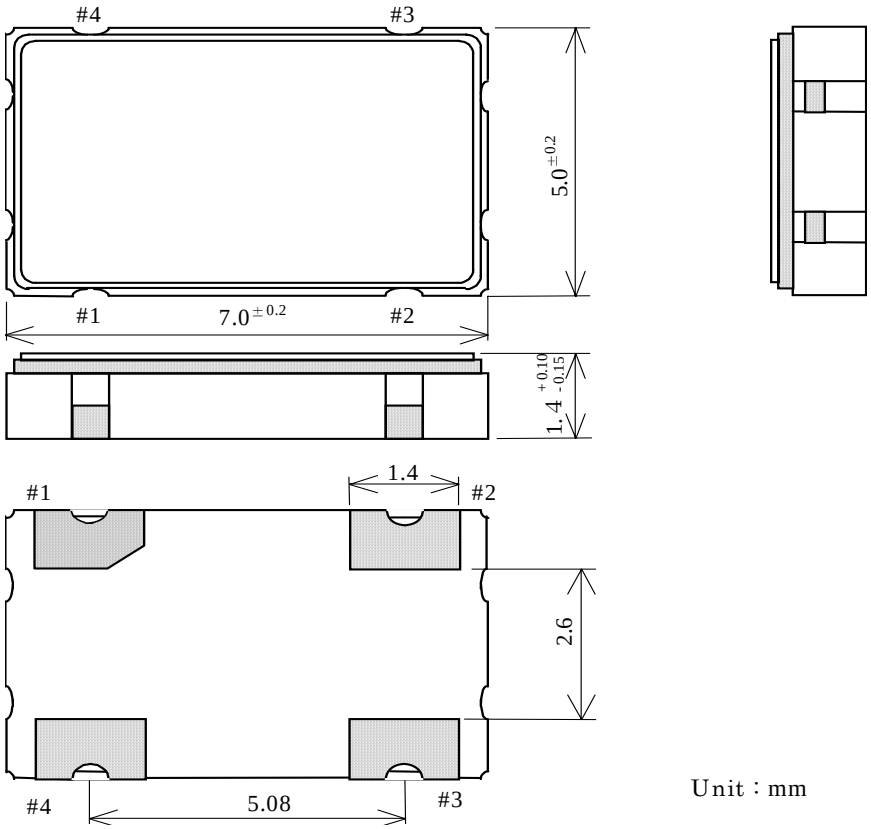

Unit：mm

2) Marking layout

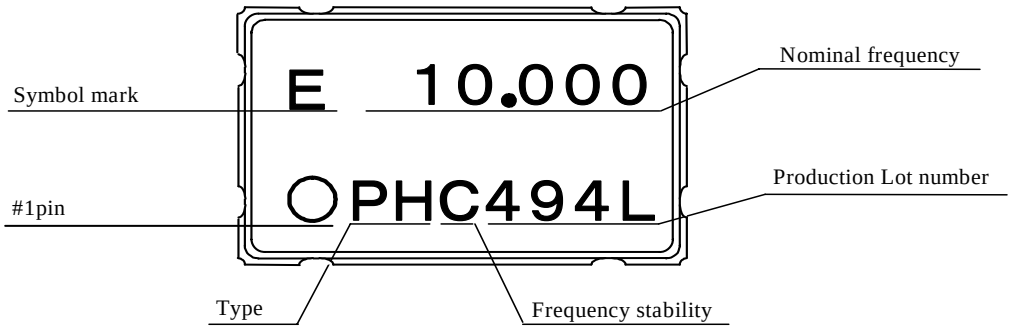

- ♦ The above marking layout shows only marking contents and their approximate position and it is not for font, size and exact position.
- ♦ Output frequency shall indicate by 3 digits below decimal point, if the value under decimal point over 3 digits, the least significant digits will be omitted.

[10] Notes

1) This device is made with C-MOS IC.
Please take precautions to prevent damage due to electrical static discharge.

2) We recommend placing a 0.01 μF to 0.1 μF capacitor closely between V_{DD} and GND to obtain stable operation and protest against power line ripple.

3) V_{DD} and GND pattern shall be as big as possible so that high frequency impedance shall be small.

4) We can not recommend to put filtering element into power line so as to reduce noise. Oscillator might be unstable oscillation because high frequency impedance of power line become higher. When use filtering element, please verify electrical construction and or element's spec.

5) Power ripple : 200 mV P-P max.

6) As a long output line may cause irregular output, please take care to design output line is as short as possible, and also keeps high level signal source away from this device.

7) Another high level signal line may cause the operation error, so please do not place high level signal line close to this device.

8) This device contains a crystal resonator, so please don't expose not give too much shock or vibration. We recommend to storage device under normal temperature and humidity to keep the specification.

9) An automatic insertion is available, however, the internal crystal resonator might be damaged in case that too much shock or vibration is applied by machine condition.
Be sure to check your machine condition in advance.

10) Ultrasonic cleaning can be applicable on the SG-8002CA, however, since the oscillator might be damaged under some conditions, please exercise in advance.

11) Some kind of solvent may damage plastic package or marking ink; please take precautions when choosing solvent.

12) We recommend to use and store under room temperature and normal humidity to secure frequency accuracy and prevent moisture.

13) When don't intend to use OE pin, please connect the pin to V_{DD}.
We recommend to install a resistor in between to mitigate effect by surge etc.

14) PLL-PLL connection
Because of using a PLL technology, there are a few case that the jitter value will increase when SG-8002 are connected the other PLL-oscillator.
In our experience, it is required careful checking in advance for the application such as telecom use or video use.

[11] Recommendable patterning

The soldering pad sample indicated as like following:

Soldering position (Unit : mm)

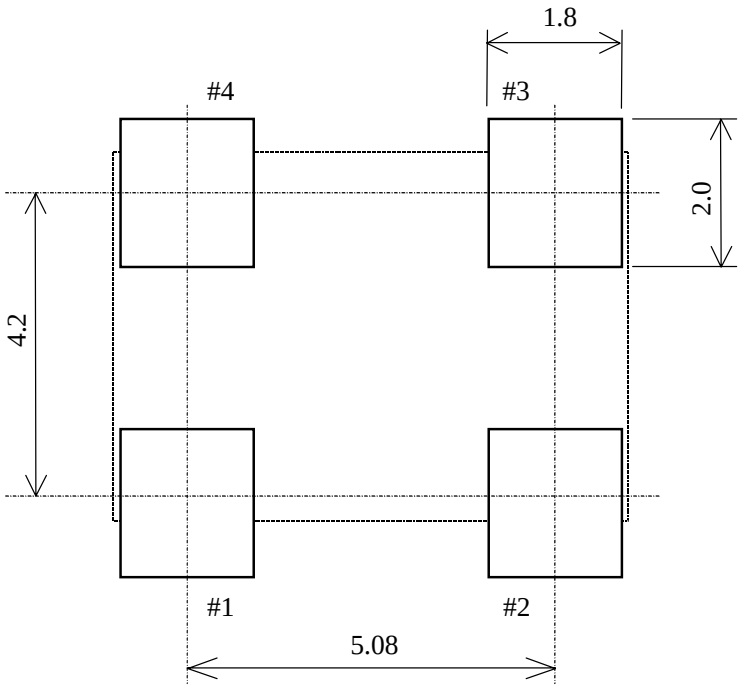

Output frequency list

SG-8002CA PH

No.	Output frequency	Frequency stability [1×10^{-6}]	Operating temperature range [°C]	Model No.	Date	Note
1	10 MHz	B : ± 50	-20 ~ +70	Q3309CA20008600	’14.09.25	
2	11.0592 MHz	B : ± 50	-20 ~ +70	Q3309CA20041100	’14.09.25	
3	8 MHz	B : ± 50	-20 ~ +70	Q3309CA20059000	’14.09.25	
4	1.8432 MHz	B : ± 50	-20 ~ +70	Q3309CA20048500	’14.09.25	

TAPING SPECIFICATION

Ⅰ. Application

This standard will apply to 7×5 Ceramic package.

Spec：CA package

Ⅱ. Contents

Item No.	Item	Page
〔1〕	Taping specification	1 to 2
〔2〕	Inner carton	3
〔3〕	Shipping carton	
〔4〕	Marking	4
〔5〕	Quantity	
〔6〕	Storage environment	
〔7〕	Handling	

〔1〕 Taping specification

Subject to「EIA-481」and「IEC-60286」

(1) Tape dimensions TE-1612L

Material of the carrier tape : PS

Material of the top tape : PET

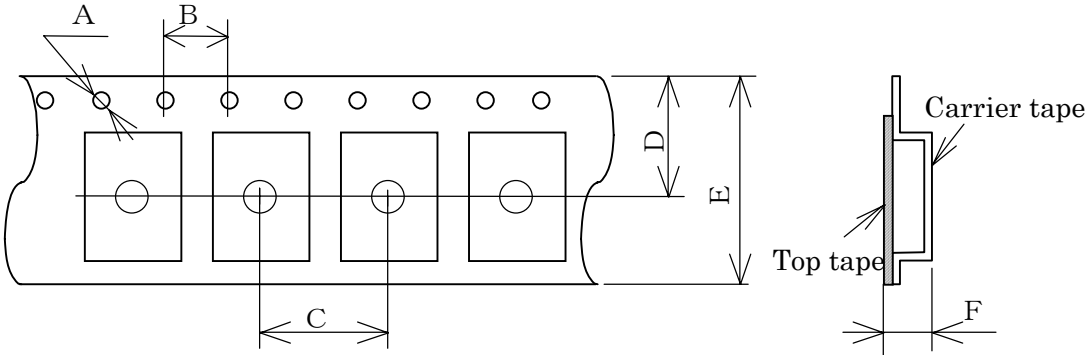

Symbol	A	B	C	D	E	F
Value	ϕ 1.5	4.0	8.0	9.25	16.0	2.3

Unit : mm

(2) Reel dimensions

Material of the reel : Conductive polystyrene

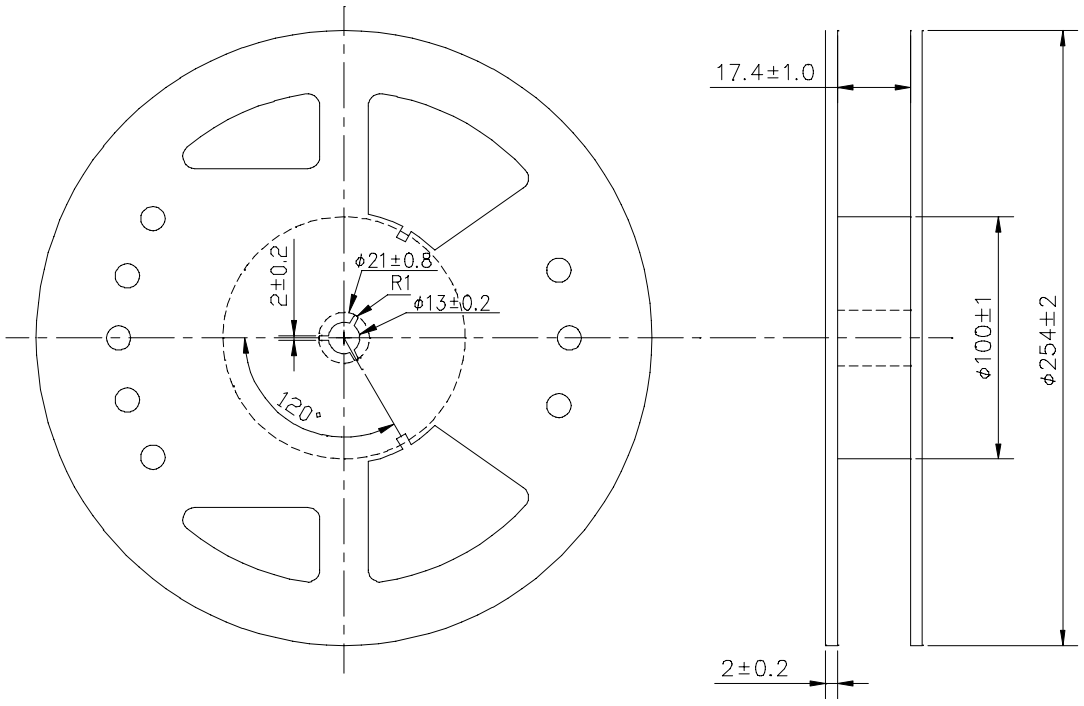

(3) Packing

①Tape & reel

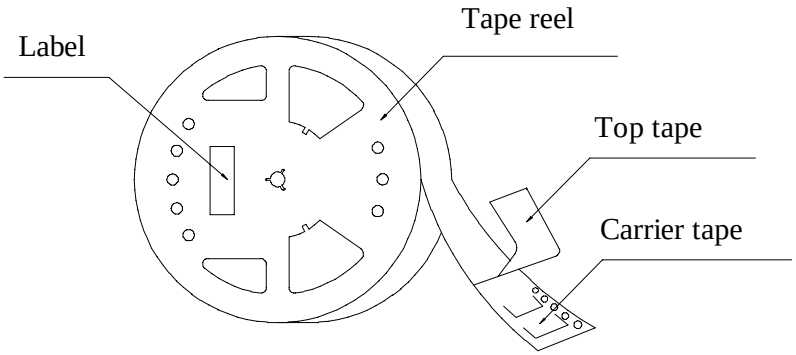

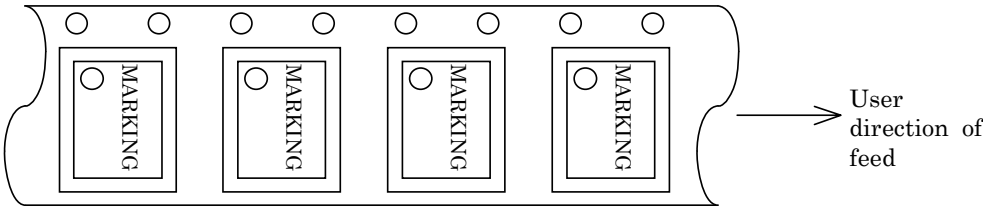

②Start & end point

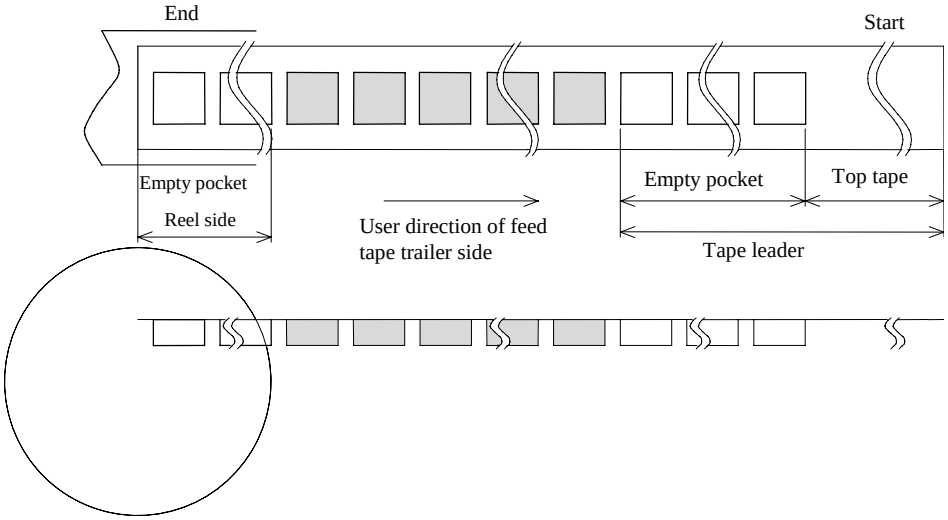

Item		Empty space
Tape leader	Top tape	Min. 1 000 mm
	Carrier tape	Min. 160 mm
Tape trailer	Top tape	Min. 0 mm
	Carrier tape	Min. 160 mm

(4) Peel force of the cover tape

① angle : cover tape during peel off and the direction of unreeling shall be 165° to 180°.

② peel speed : 300 mm / min.

〔2〕 Inner carton

a) Packing to antistatic bag

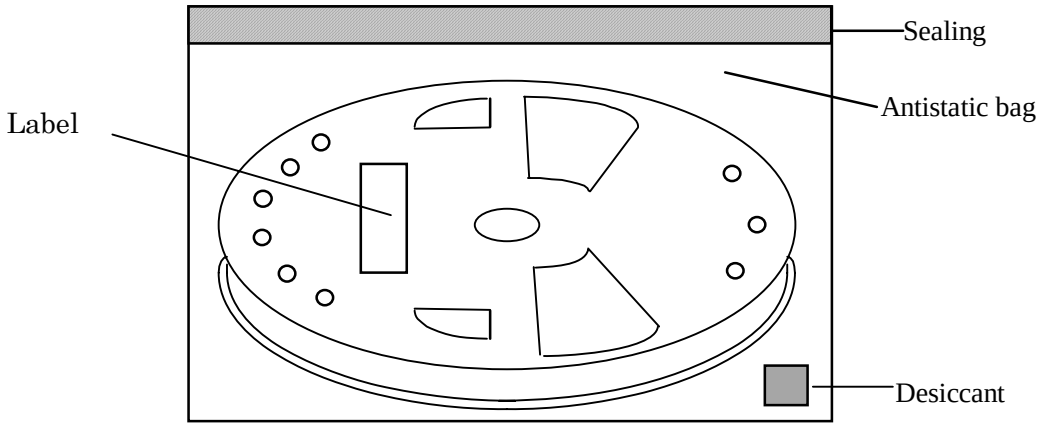

b) Packing to inner carton

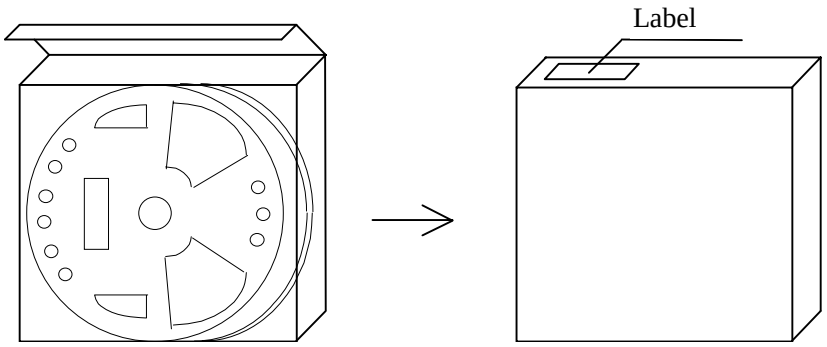

〔3〕 Shipping carton

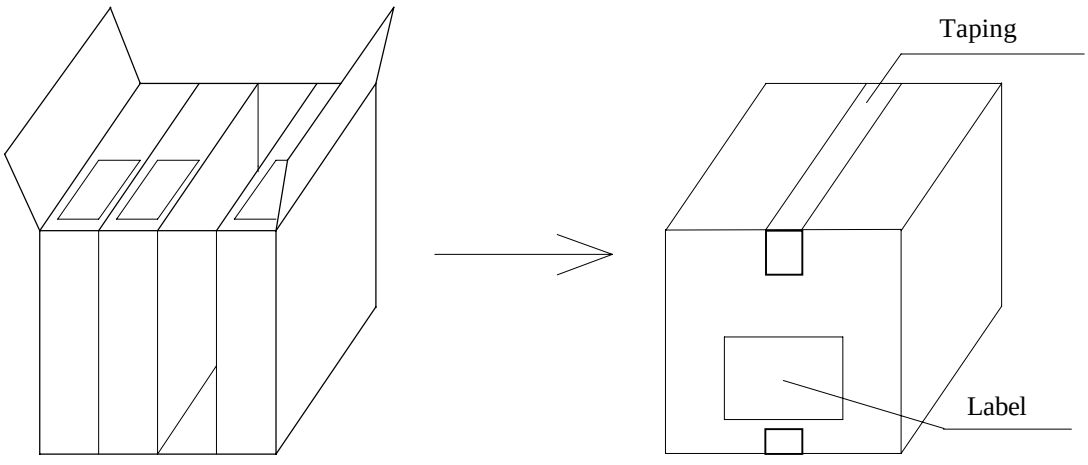

〔4〕 Marking

(1) Reel marking

・Reel marking shall consist of :

1) Parts name
2) Quantity
3) Manufacturing date or symbol
4) Manufacturer’s date or symbol
5) Others (if necessary)

(2) Inner carton marking

・Same as reel marking.

(3) Shipping carton marking

・Shipping carton marking shall consist of :

1) Parts name
2) Quantity

〔5〕 Quantity

・1 000 pcs./reel

〔6〕 Storage environment

(1) To storage the reel at 15 °C to 35 °C, 25 %RH to 85 %RH of humidity.
(2) To open the packing just before using.
(3) Not to expose the sun.
(4) Not to storage with some erosive chemicals.
(5) Nothing is allowed to put on the reel or carton to prevent mechanical damage.

〔7〕 Handling

・To handle with care to prevent the damage of tape, reel and products.

- PROCESS QUALITY CONTROL -

No. SG-8002CA - 00 - AME - 5 CRYSTAL OSCILLATOR : SG-8002CA

'05.10.13

Manufacturing process chart	No.	Section In Charge	Standards	Inspection, Control Item	Instruments	Inspection Methods	Record
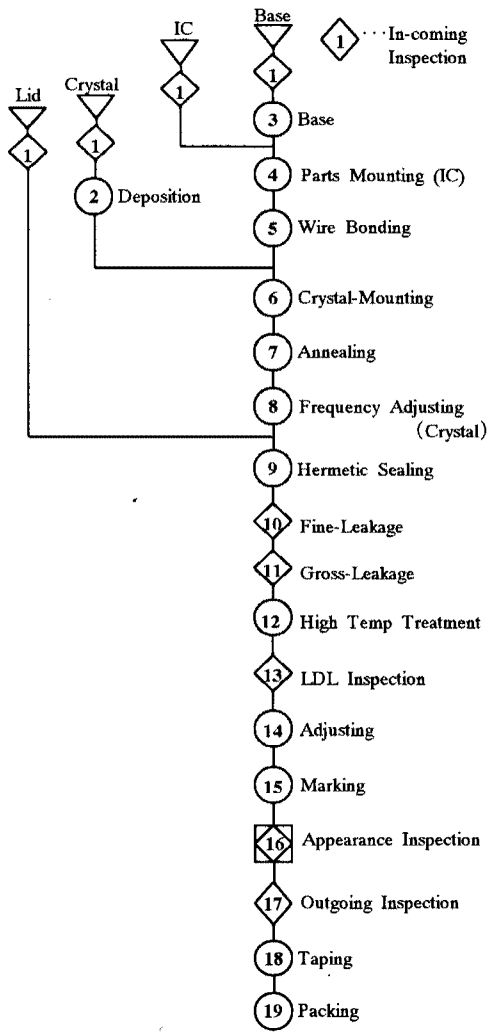	1	Inspection Section	Purchasing specification Incoming inspection standard	Appearance Dimension	Microscope	Sampling	Data sheet
	2	Production Section	Manufacturing instruction sheet	Appearance Peeling strength Frequency	Microscope Scratch CI Meter	Sampling	Data sheet
	3	Production Section	Manufacturing instruction sheet	Appearance	Microscope	Sampling	Data sheet
	4	Production Section	Manufacturing instruction sheet	Appearance	Microscope	Sampling	Data sheet
	5	Production Section	Manufacturing instruction sheet	Bonding strength Appearance	Gauge Microscope	Sampling 100% Inspection	Data sheet
	6	Production Section	Manufacturing instruction sheet	Appearance	Microscope	100% Inspection	Data sheet
	7	Production Section	Manufacturing instruction sheet	Appearance	Microscope	Sampling	Data sheet
	8	Production Section	Manufacturing instruction sheet	—	—	—	—
	9	Production Section	Manufacturing instruction sheet	Appearance Frequency	Microscope Counter	Sampling Sampling	Data sheet
	10	Production Section	Manufacturing instruction sheet	Leakage inspection	Measuring equipment	100% Inspection	Data sheet
	11	Production Section	Manufacturing instruction sheet	Leakage inspection	Measuring equipment	100% Inspection	Data sheet
	12	Production Section	Manufacturing instruction sheet	—	—	—	—
	13	Production Section	Manufacturing instruction sheet	Characteristic inspection	Measuring equipment	100% Inspection	Data sheet
	14	Production Section	Manufacturing instruction sheet	Electrical characteristic Master check	Measuring equipment	100% Inspection One/Day	Data sheet
	15	Production Section	Manufacturing instruction sheet	Appearance	Visual inspection	Sampling	Data sheet
	16	Production Section	Manufacturing instruction sheet	Appearance Master check	Visual inspection	100% Inspection One/Day	Data sheet
	17	Inspection Section	Delivery specifications Outgoing inspection standard	Electrical characteristic Appearance Master check	Measuring equipment Visual inspection	Sampling One/Day	Data sheet
	18	Production Section	Manufacturing instruction sheet	Tape peeling strength Frequency check function	Peeling strength test machine	Sampling One/Day	Data sheet
	19	Production Control Section	Manufacturing instruction sheet Daily shipping list	Customers Type Quantity	—	—	Delivery Slip

- PROCESS QUALITY CONTROL -

No. SG8002CA - 00 – ASE – 4 CRYSTAL OSCILLATOR :SG-8002CA

'05.10.13

Manufacturing process chart	No.	Section In Charge	Standards	Inspection, Control Item	Instruments	Inspection Methods	Record
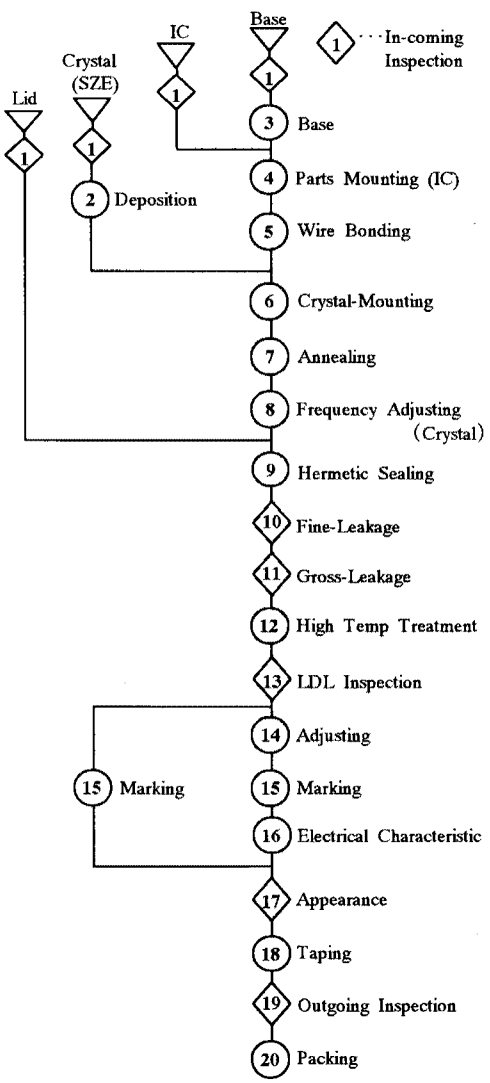	1	Inspection Section (INA)	Purchasing specification Incoming inspection standard	Appearance Dimension	Microscope	Sampling	Data sheet
	2	China plant	Manufacturing instruction sheet	Appearance Peeling strength Frequency	Microscope Scratch CI Meter	Sampling	Data sheet
	3	China plant	Manufacturing instruction sheet	Appearance	Microscope	Sampling	Data sheet
	4	China plant	Manufacturing instruction sheet	Appearance	Microscope	Sampling	Data sheet
	5	China plant	Manufacturing instruction sheet	Bonding strength Appearance	Gauge Microscope	Sampling 100% Inspection	Data sheet
	6	China plant	Manufacturing instruction sheet	Appearance Mounting strength	Microscope Gauge	100% Inspection Sampling	Data sheet
	7	China plant	Manufacturing instruction sheet	Appearance	Microscope	Sampling	Data sheet
	8	China plant	Manufacturing instruction sheet	Frequency	Counter	Sampling	Data sheet
	9	China plant	Manufacturing instruction sheet	Appearance Frequency	Microscope Counter	Sampling Sampling	Data sheet
	10	China plant	Manufacturing instruction sheet	Leakage inspection	Measuring equipment	100% Inspection	Data sheet
	11	China plant	Manufacturing instruction sheet	Leakage inspection	Measuring equipment	100% Inspection	Data sheet
	12	China plant	Manufacturing instruction sheet	—	—	—	—
	13	China plant	Manufacturing instruction sheet	Characteristic inspection	Measuring equipment	100% Inspection	Data sheet
	14	China plant	Manufacturing instruction sheet	Electrical characteristic Master check	Measuring equipment	100% Inspection One/Day	Data sheet
	15	China plant	Manufacturing instruction sheet	Appearance	Visual inspection	Sampling	Data sheet
	16	China plant	Manufacturing instruction sheet	Electrical characteristic	Measuring equipment	100% Inspection	Data sheet
	17	China plant	Manufacturing instruction sheet	Appearance Master check	Microscope	Sampling One/Day	Data sheet
	18	China plant	Manufacturing instruction sheet	Tape peeling strength Frequency check function	Peeling strength test machine	Sampling One/Day	Data sheet
	19 before Taping	China plant	Delivery specifications Outgoing inspection standard	Electrical characteristic Appearance Master check	Measuring equipment Visual inspection	Sampling One/Day	Data sheet
	19 after Taping	China plant	Outgoing inspection standard	Appearance	Visual iInspection	100% Inspection	Data sheet
	20	China plant	Manufacturing instruction sheet Daily shipping list	Customers Type Quantity	—	—	Delivery Slip

Structure diagram SG-8002CA

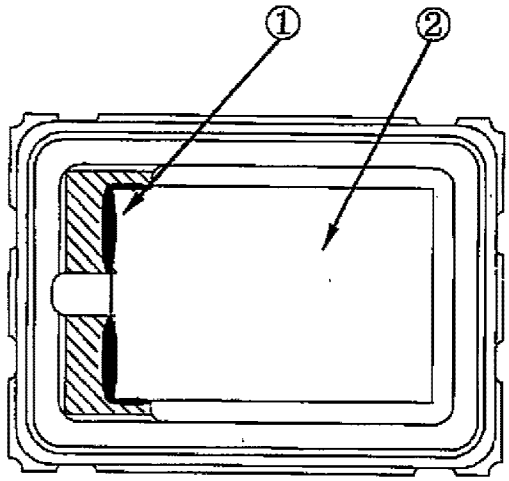

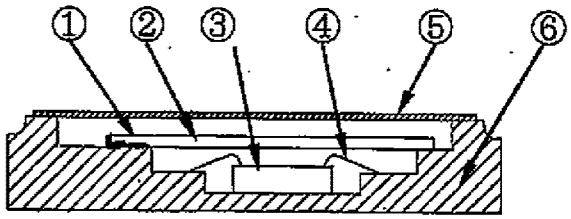

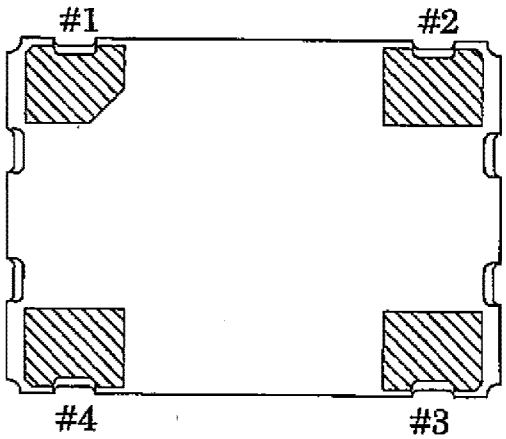

LIST		
Name of part		Material
①	Crystal adhesive	Ag paste
②	Crystal chip	AT cut
③	IC	C-MOS
	IC conductive adhesive	Ag paste
④	Bonding wire	Au
⑤	Cap	Cover
⑥	Package	Ceramic (Al_2O_2)