GREE ELECTRIC APPLIANCES INC

RECIPIENT

SPECIFICATIONS

Product No. : X1G004171003900

MODEL : SG-210STF

SPEC. No. : A15-535-2A

DATE: Jun. 11. 2015

SEIKO EPSON CORPORATION

8548 Naka-minowa
Minowa-machi Kamiina-gun
Nagano-ken
399-4696 Japan

CHECKED _____ / TD･CS Quality Assurance Department Manager
Yasushi Hiraizumi

PREPARED _____ / TD･CS Quality Assurance Department Senior Staff
Emi Oguchi

SPECIFICATIONS

1. Application

(1) This document is applicable to the crystal oscillator that are delivered to GREE ELECTRIC APPLIANCES INC from Seiko Epson Corp.

(2) This product is compliant with RoHS Directive.

(3) This Product supplied (and any technical information furnished, if any) by Seiko Epson Corporation shall not be used for the development and manufacture of weapon of mass destruction or for other military purposes. Making available such products and technology to any third party who may use such products or technologies for the said purposes are also prohibited.

(4) This product listed here is designed as components or parts for electronics equipment in general consumer use. We do not expect that any of these products would be incorporated or otherwise used as a component or part for the equipment, which requires an extra high reliability, such as satellite, rocket and other space systems, and medical equipment, the functional purpose of which is to keep life.

2. Product No. / Model

The product No. of this crystal oscillator unit is X1G004171003900.
The model is SG-210STF.

3. Packing

It is subject to the packing standard of Seiko Epson Corp.

4. Warranty

Defective parts which are originated by us are replaced free of charge in case defects are found within 12 months after delivery.

5. Amendment and abolishment

Amendment and/or abolishment of this specification are subject to the agreement between both parties.

6. Contents

Item No.	Item	Page
[1]	Absolute maximum ratings	2
[2]	Operating range	2
[3]	Frequency characteristics	2
[4]	Terminal assignment	3
[5]	Electrical characteristics	4
[6]	Test circuit	5
[7]	Timing chart	6-7
[8]	Environmental and mechanical characteristics	8
[9]	Dimensions and marking layout	9
[10]	Notes	10
[11]	Recommendable patterning	11

[1] Absolute maximum ratings

Parameter	Symbol	Value	Unit	Note
Supply voltage	V_{CC}-GND	-0.3 to +4.0	V	
Storage temperature *	T_stg	-40 to +125	°C	Stored as bare product after unpacking.
Input voltage	V_{IN}	-0.3 to V_{CC}+0.3	V	$\overline{ST}$ Terminal

* Concerning the frequency change, please refer [8] Environmental and mechanical characteristics.

[2] Operating range

Parameter	Symbol	Value			Unit	Note
		Min.	Typ.	Max.		
Supply voltage	V_{CC}	1.6	-	3.6	V	
Supply voltage	GND	0.0	0.0	0.0	V	
Input voltage	V_{IN}	GND	-	V_{CC}	V	
Operating temperature	T_use	-40	+25	+105	°C	
Output load condition	L_CMOS	-	-	15	pF	

- Start up time(0 %V_{CC}→90 %V_{CC}) of power source should be more than 150 μs.
- By-pass capacitor (0.01 μF to 0.1 μF) is connected near Vcc between Vcc and GND.
  (Refer to [11] Recommendable patterning)

[3] Frequency characteristics

Output frequency (f_0) range .....1.0000MHz ～75.0000 MHz

Parameter	Symbol	Value[1×10^{-6}]	Note
Frequency tolerance *	f_tol (OSC)	S : ±25×10^{-6}	T_use = -20 °C ~+70 °C
		L : ±50×10^{-6}	T_use = -40 °C ~+85 °C
		Y : ±50×10^{-6}	T_use = -40 °C ~+105 °C
Aging	F_aging	± 3	T_use=+25 °C, V_{CC}=3.3 V First year

* This includes initial frequency tolerance, temperature characteristics, input voltage characteristics, and load characteristics, but excludes aging.

[4] Terminal assignment

Top View

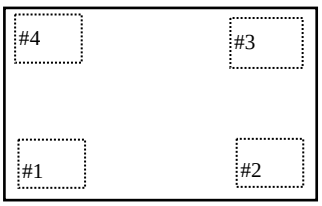

Terminal name	Terminal No.	Terminal type.
$\overline{ST}$	1	INPUT
GND	2	—
OUT	3	OUTPUT
V_{CC}	4	—

$\overline{ST}$ pin : High or open. → Specified frequency output = enable.

$\overline{ST}$ pin : Low. → Output is high impedance = disabled.

* When the $\overline{ST}$ terminal is not controlled, it should be connected to the Vcc terminal.

[5] Electrical characteristics

(Please see page 2 [2] Operating range)

Parameter	Symbol	Value Min.	Value Max.	Unit	Note	
Start up time	tOSC	-	3	ms	t=0 at 90 % V_{CC}	
Current consumption	ICC	-	1.5	mA	No load 1 MHz ≤ fo ≤ 20MHz	Vcc = 1.6 V to 2.2 V
			1.8		No load 20MHz < fo ≤ 40MHz	
			2.1		No load 40MHz ≤ fo ≤ 60MHz	
			2.4		No load 60 MHz < fo ≤ 75 MHz	Vcc = 1.71 V to 2.2 V
		-	1.6		No load 1 MHz ≤ fo ≤ 20MHz	Vcc = 2.2 V to 2.7 V
			2.0		No load 20MHz < fo ≤ 40MHz	
			2.4		No load 40MHz ≤ fo ≤ 60MHz	
			2.8		No load 60 MHz < fo ≤ 75 MHz	
		-	1.8		No load 1 MHz ≤ fo ≤ 20MHz	Vcc = 2.7 V to 3.6 V
			2.2		No load 20MHz < fo ≤ 40MHz	
			2.6		No load 40MHz ≤ fo ≤ 60MHz	
			3.0		No load 60 MHz < fo ≤ 75 MHz	
Standby current	I_std	-	2.1	µA	$\overline{ST}$ =GND Ta<+105 °C	Vcc = 1.6 V to 2.2 V
			2.5			Vcc = 2.2 V to 2.7 V
			2.7			Vcc = 2.7 V to 3.6 V
Output rise time	tr	-	3.0	ns	20 % V_{CC} → 80 %VCC	
		-	3.5		20 % V_{CC} → 80 %VCC Vcc=1.8V±10%	
Output fall time	tf	-	3.0	ns	80 % V_{CC} → 20 %VCC	
		-	3.5		80 % V_{CC} → 20 %VCC Vcc=1.8V±10%	
Symmetry	SYM	45	55	%	50 % V_{CC} Level	
High level output voltage	VOH	V_{CC}-0.4	-	V	IOH = -1 mA	
Low level output voltage	VOL	-	0.4	V	IOL = 1 mA	
High level input voltage	VIH	0.8 V_{CC}	-	V	$\overline{ST}$ terminal	
Low level input voltage	VIL	-	0.2 V_{CC}	V	$\overline{ST}$ terminal	
Input current	IIH	-	10	µA	VIN = VCC	
	IIL	-10	-	µA	VIN = GND	
Output disable time	tstp	-	100	ns	$\overline{ST}$ terminal High → Low	
Output enable time	tsta	-	3	ms	$\overline{ST}$ terminal Low → High	

Refer to [6] Test circuit [7] Timing chart

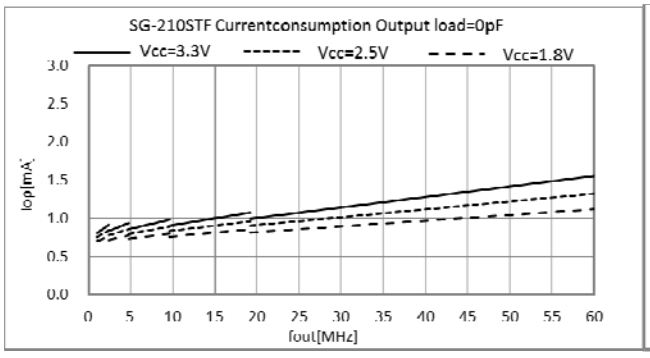

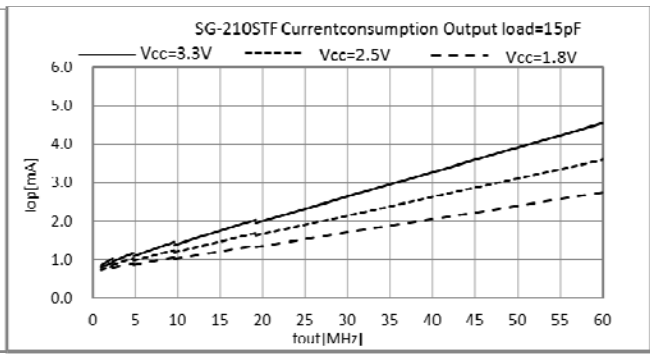

[6] Test circuit

1) Waveform observation

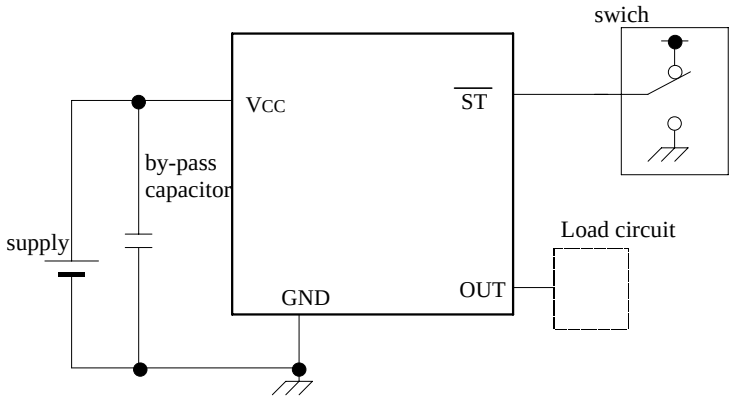

Load circuit load capacitance

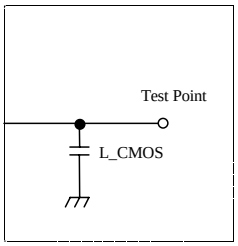

2) Current consumption

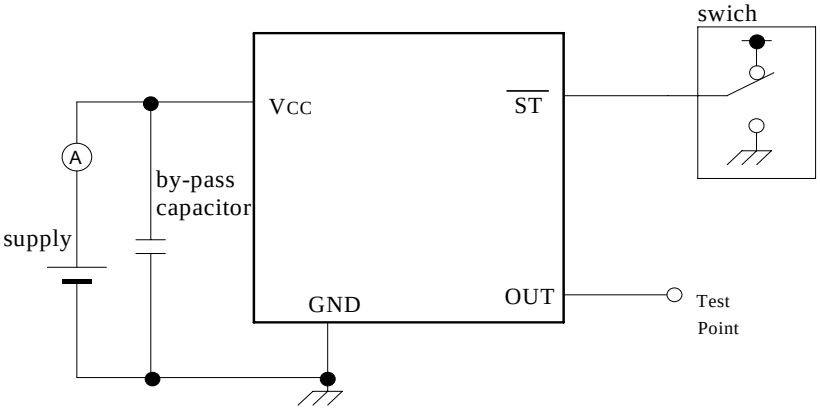

*Current consumption under the disable function should be $\overline{ST}$ = GND.

3) Condition

(1) Oscilloscope

- Band width should be minimum 5 times higher (wider) than measurement frequency.
- Probe earth should be placed closely from test point and lead length should be as short as possible.

* Recommendable to use miniature socket. (Don't use earth lead.)

(2) L_CMOS also includes probe capacitance.

(3) By-pass capacitor (0.01 μF to 0.1 μF) is placed closely between V_{CC} and GND.

(4) Use the current meter whose internal impedance value is small.

(5) Power supply

- Start up time (0 %V_{CC} → 90 %V_{CC}) of power source should be more than 150 μs.
- Impedance of power supply should be as lowest as possible.

[7] Timing chart

1) C-MOS load SYM = tw/t × 100 (%)

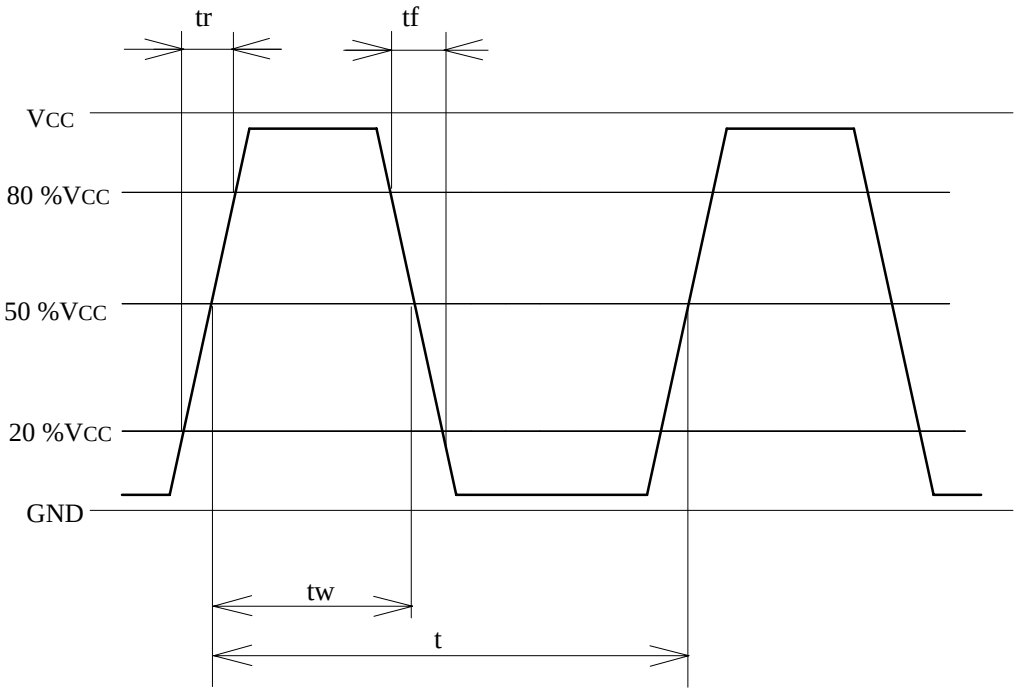

2) $\overline{ST}$ function and timing

$\overline{ST}$ function	Osc. circuit	Output status
High or Open	Oscillation	Specified frequency is output : Enable
Low	Oscillation stop	Output becomes high impedance : Disable

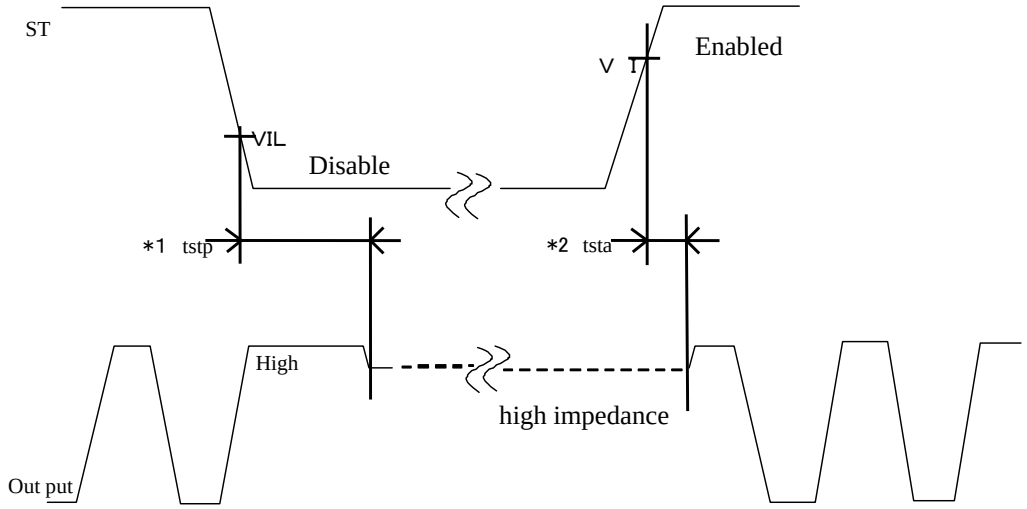

*1 The time taken from $\overline{ST}$ =VIL to output = Disable (high impedance)

*2 The time taken from $\overline{ST}$ =VIH to output = Start

Output start : VOH≥80%VCC, VOL≤20 %VCC, fout = fo±1 000×10^{-6}

3) $\overline{ST}$ Control timing

$\overline{ST}$ function is used on the voltage below supply voltage.

$\overline{ST}$ control timing differs from Vcc control timing

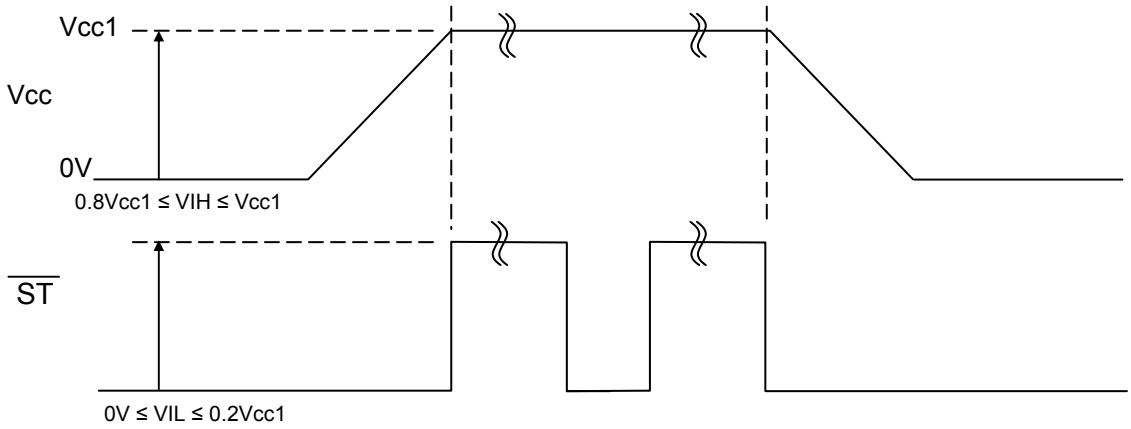

$\overline{ST}$ terminal is connected to Vcc terminal

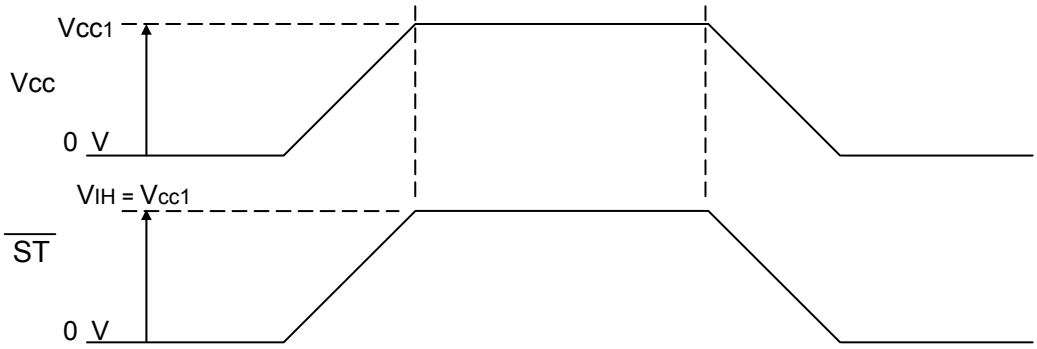

4) Timing of an output frequency signal

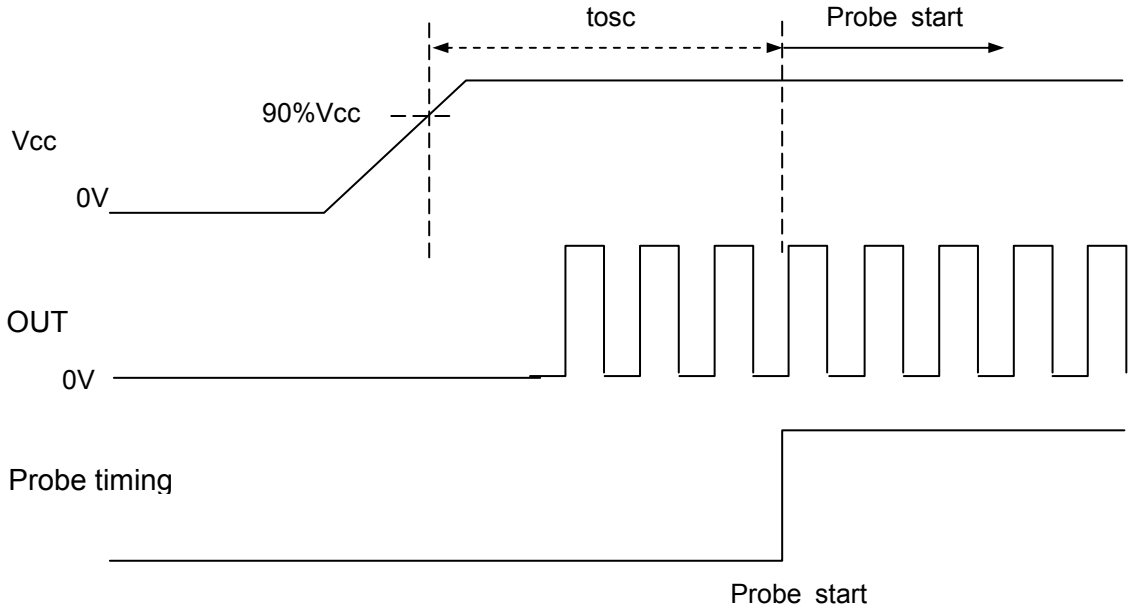

[8] Environmental and mechanical characteristics

(The company evaluation condition We evaluate it by the following examination item and examination condition.)

No.	Item	Value *1		Test Conditions
		Δ f / f *2 [1×10^{-6}]	Electrical characteristics	
1	High temperature storage	*3 ± 20	Satisfy Item [5] after test.	+125 °C × 1 000 h
2	Low temperature storage	*3 ± 10		-40 °C × 1 000 h
3	High temperature bias	*3 ± 10		+105 °C × V_{CC} Max. × 1 000 h
4	Low temperature bias	*3 ± 10		-40 °C × V_{CC} Max. × 1 000 h
5	Temperature humidity bias	*3 ± 10		+85 °C × 85 %RH × V_{CC} Max. × 1 000 h
6	Temperature cycle	*3 ± 10		-40 °C ↔ +125 °C 30 min. at each temperature 100 cycles
7	Resistance to soldering heat	± 3		Convection reflow soldering furnace (3 time) Ref. IPC/JEDEC J-STD-020D.1
8	Shock	± 3		150 g dummy Jig (SEIKO EPSON Standard) drop from 1 500 mm height on the Concrete 3 directions 10 times.
9	Vibration	± 2		10 Hz to 55 Hz amplitude 0.75 mm 55 Hz to 500 Hz acceleration 98 m/s^2 10 Hz → 500 Hz → 10 Hz 15 min./cycle 6 h (2 hours , 3 directions)
10	Seal	1×10^{-9} Pa·m^3 / s		He leakage detector
11	Solderability	Termination must be 95 % covered with fresh solder		Dip termination into solder bath at +235 °C ± 5 °C for 5 s. (Using Rosin Flux)
12	Pull - off	No peeling-off at a solder part		10 N press for 10 s ± 1 s Ref. EIAJ ED-4702

< Notes >

*1 Each test done independently.

*2 Measuring 2 h to 24 h later leaving in room temperature after each test.

*3 Initial value shall be measured after 24 h storage at room temperature after pre-conditioning.
Pre-conditioning: Reflow (3 time)

Convection reflow condition （IPC/JEDEC J-STD-020D.1）

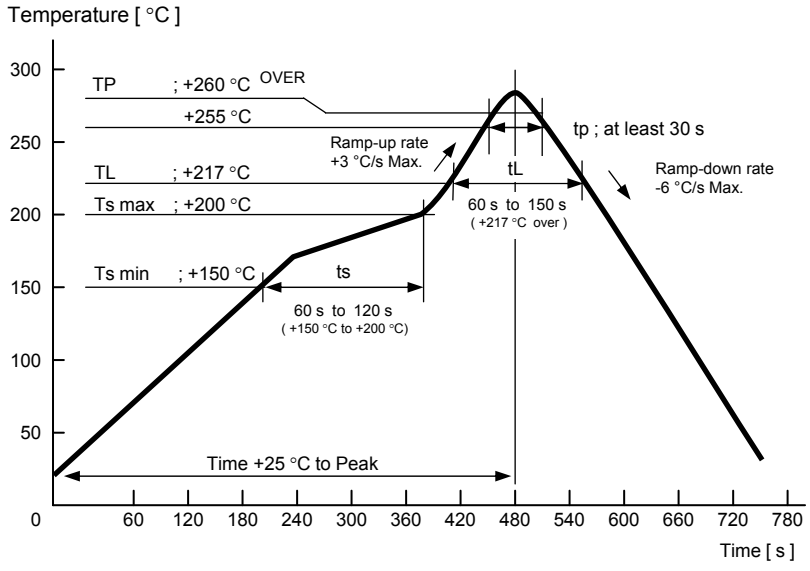

[9] Dimensions and marking layout

1) Dimensions

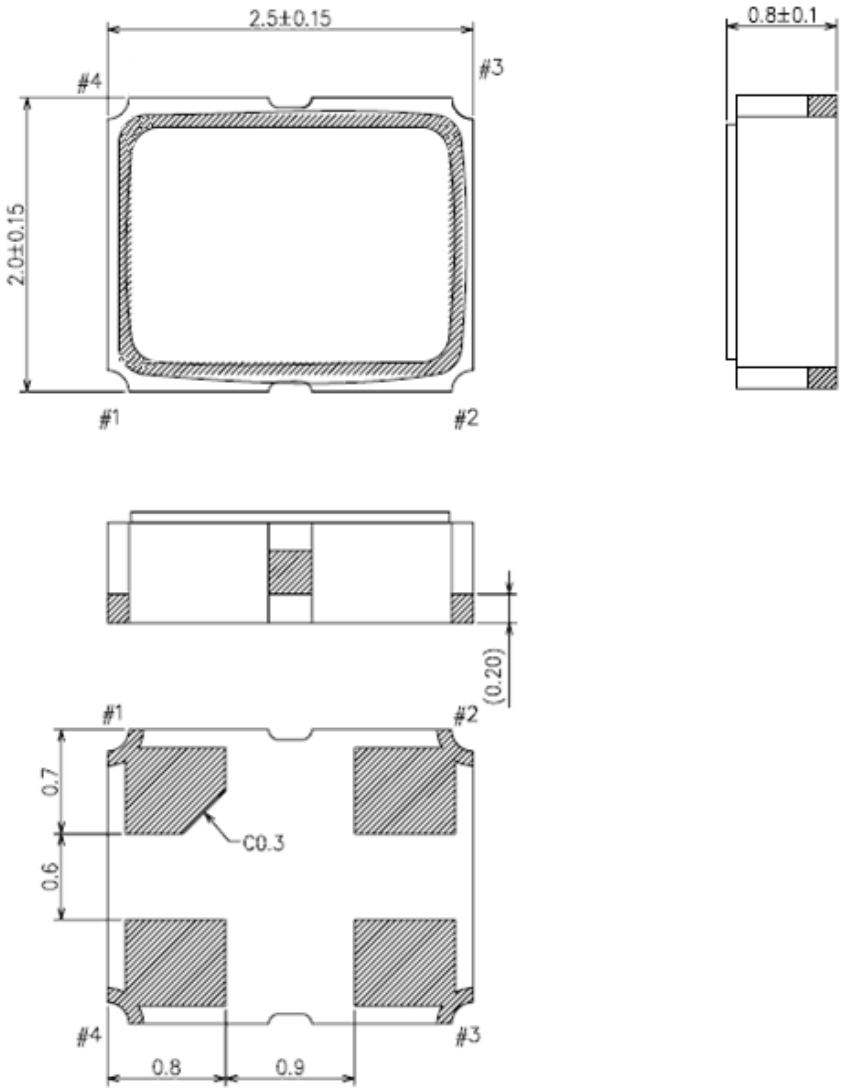

Terminal treatment : Au plating

Unit : mm

2) Marking layout

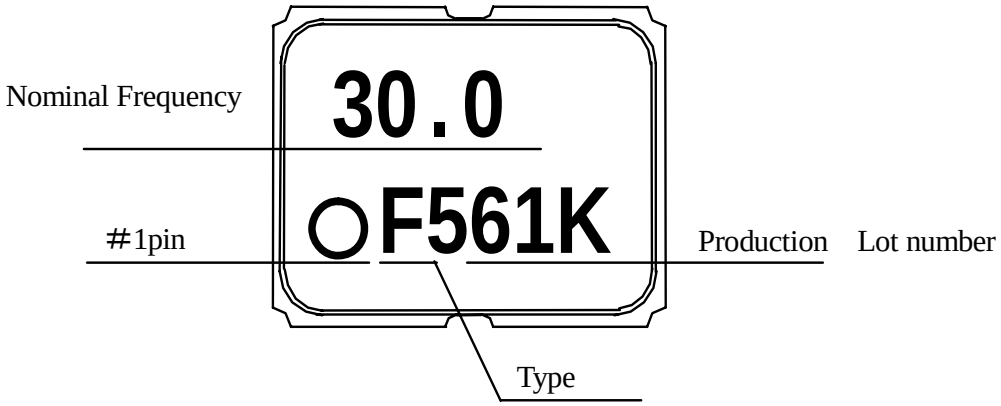

- ♦ The above marking layout shows only marking contents and their approximate position and it is not for font, size and exact position.
- ♦ Output frequency shall indicate 4 digits (include decimal point), if the value of frequency over 5 digits, the least significant digits will be omitted.

[10] Notes

1) This device is made with C-MOS IC.
Please take necessary precautions to prevent damage due to electrical static discharge.

2) SEIKO EPSON recommends a 0.01 μF to 0.1 μF capacitor must be connected near Vcc between Vcc and GND to obtain stable operation and protect against power line ripple.

3) Vcc and GND pattern shall be as large as possible so that high frequency impedance shall be small.

4) SEIKO EPSON cannot recommend to put filtering element into power line so as to reduce noise. Oscillator might be unstable oscillation because high frequency impedance of power line become higher. When use filtering element, please verify electrical construction and or element's spec.

5) SEIKO EPSON doesn't recommend to power on from intermediate electric voltage or extreme fast power on, Those powering conditions may cause no oscillation or abnormal oscillation.

6) Power ripple: 200 mV P-P max. Start up time (0 %V_{CC}→90 %V_{CC}) of power source should be more than 150 μs.

7) A long output line may cause irregular output, so try to make the output line as short as possible.

8) Other high-level signal lines may cause incorrect operation, so please do not place high level signal line close to this device.

9) This device contains a crystal resonator, so please don't expose excessive shock or vibration. SEIKO EPSON recommends store device under normal temperature and humidity to keep the specification.

10) An automatic insertion is available, however, the internal crystal resonator might be damaged in case that too much shock or vibration is applied by machine condition.
Be sure to check your machine condition in advance.

11) Ultrasonic cleaning can be used on the SG-210STF, however, since the oscillator might be damaged under some conditions, please exercise in advance.

12) SEIKO EPSON recommends to use and store under room temperature and normal humidity to secure frequency accuracy and prevent moisture.

13) $\overline{ST}$ -pin has pull-up resistor internally. The resistor value is switched depending on input voltage. Please refer to electrical characteristics.

14) Lid is electrically connected to GND.
Please don't apply electrical voltage.

[11] Recommendable patterning

The soldering pad sample indicated as like following:

Soldering position (Unit : mm)

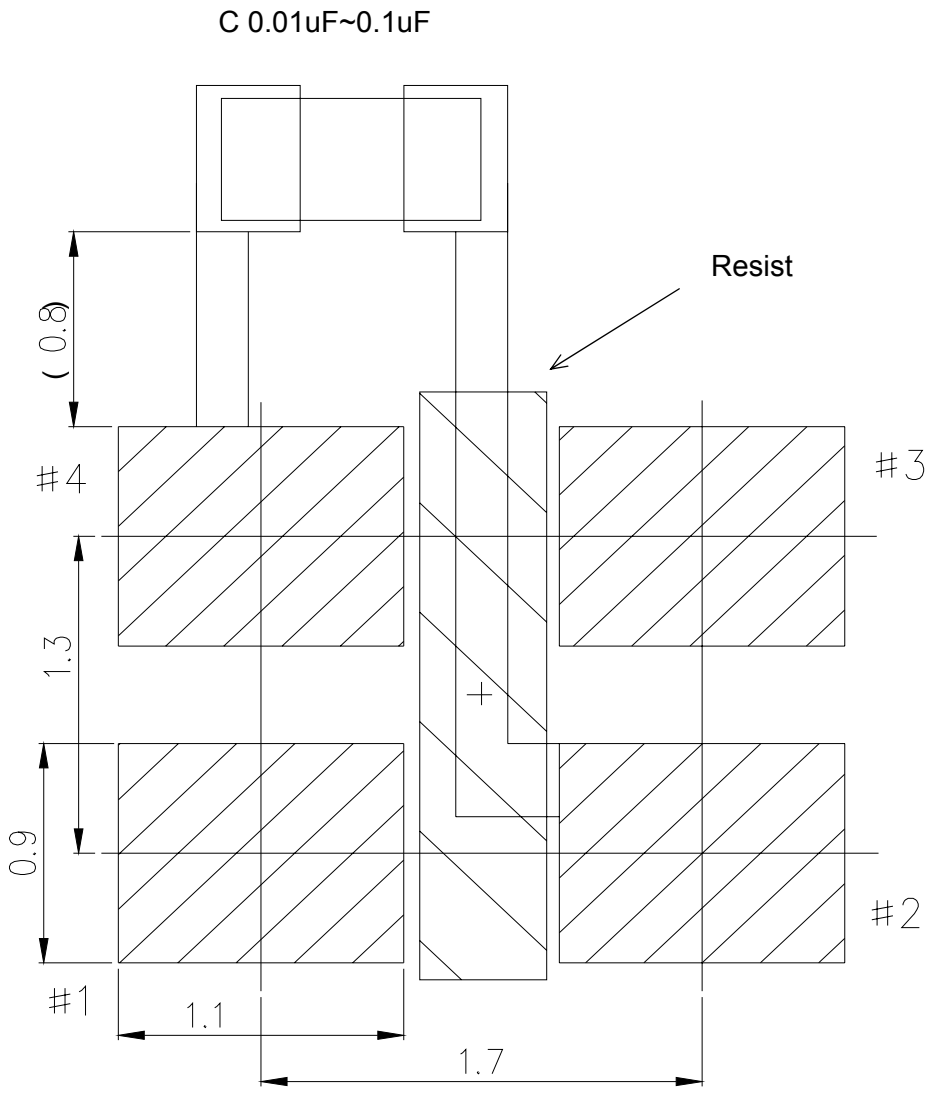

Output frequency list

SG-210STF

No.	Output frequency	Frequency stability [1×10^{-6}]	Operating temperature range [°C]	Model No.	Date	Note
1	30 MHz	L : ± 50	-40 ~+85	X1G004171003900	’15.06.11	

TAPING SPECIFICATION

Ⅰ. Application

This standard will apply to 2.5×2.0 Ceramic package.

Spec：CG package

Ⅱ. Contents

Item No.	Item	Page
〔1〕	Taping specification	1 to 2
〔2〕	Inner sleeve	3
〔3〕	Shipping carton	
〔4〕	Marking	4
〔5〕	Quantity	
〔6〕	Storage environment	
〔7〕	Handling	

〔1〕 Taping specification

Subject to「EIA-481」and「IEC-60286」

(1) Tape dimensions

Material of the carrier tape : ＰＳ

Material of the top tape : PET+PE

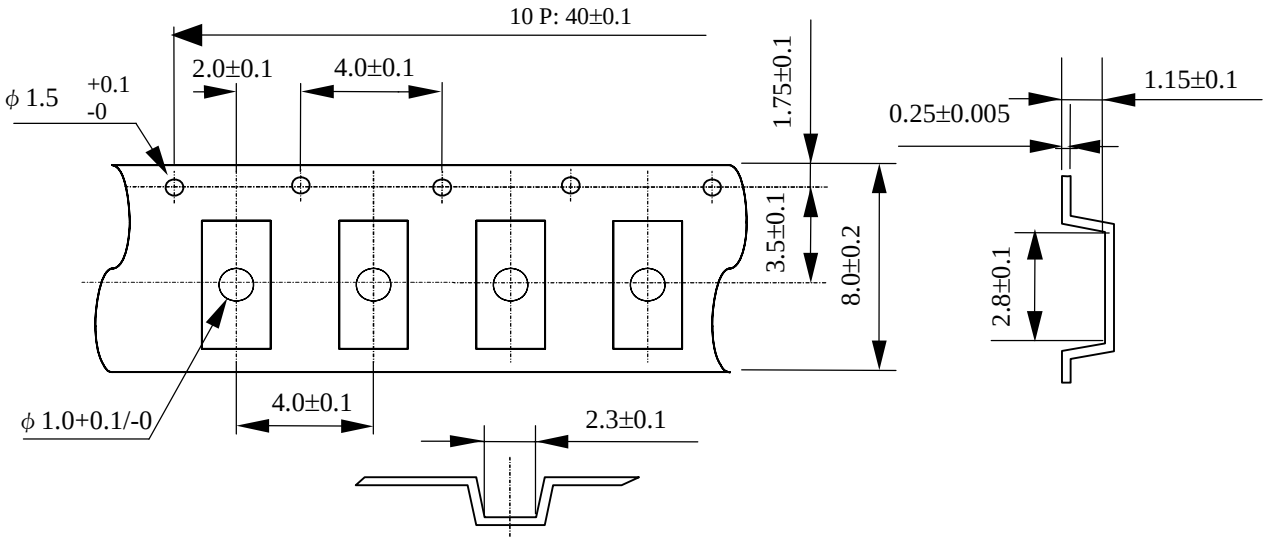

Unit : mm

(2) Reel dimensions

Material of the reel : Conductive polystyrene

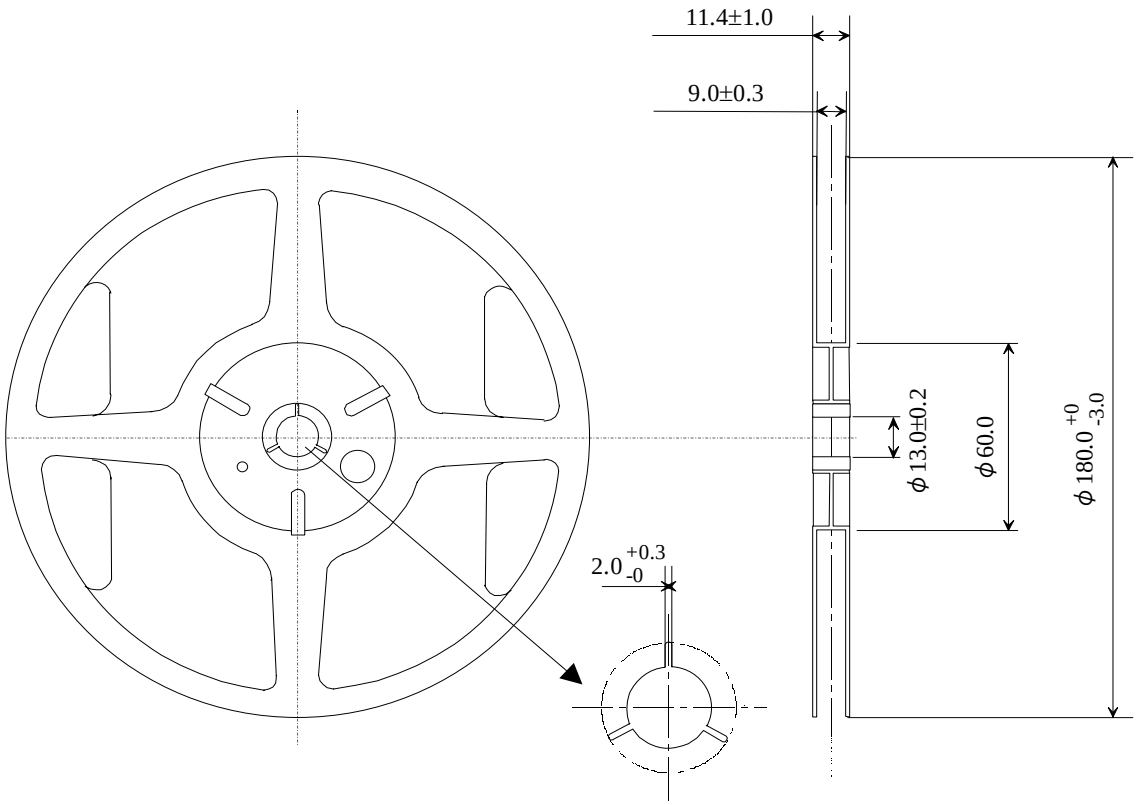

(3) Packing

①Tape & reel

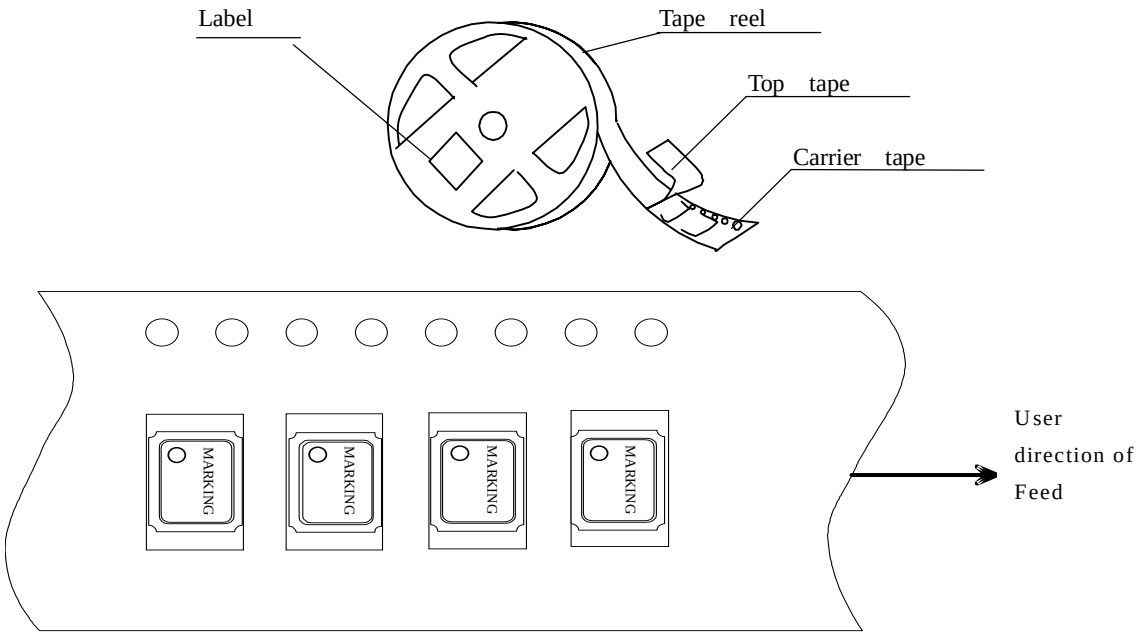

②Start & end point

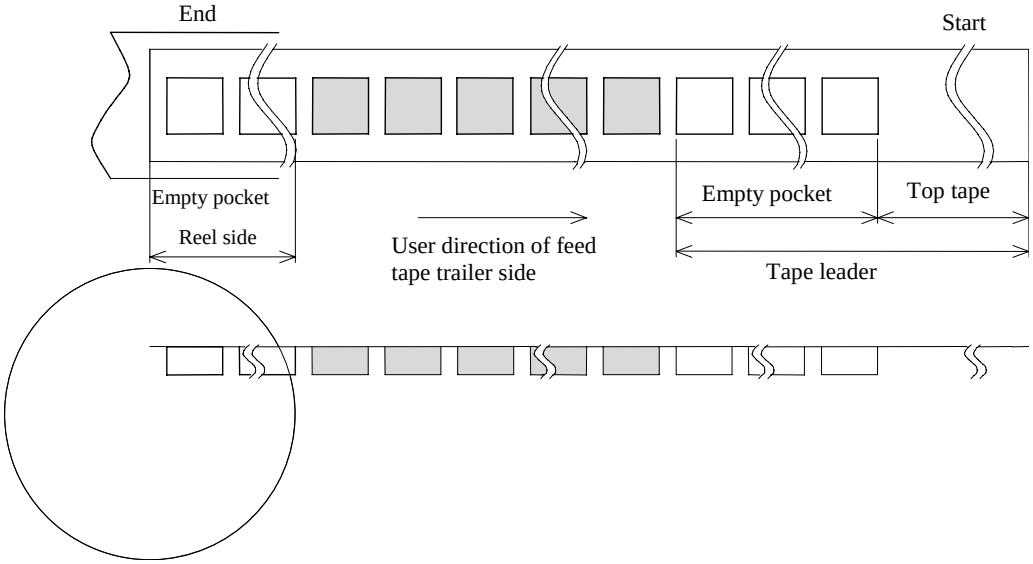

Item		Empty space
Tape leader	Top tape	Min. 1 000 mm
	Carrier tape	Min. 160 mm
Tape trailer	Top tape	Min. 0 mm
	Carrier tape	Min. 160 mm

(4) Peel force of the cover tape

① angle : cover tape during peel off and the direction of unreeling shall be 165° to 180°.

② peel speed : 300 mm / min.

③ strength : 0.1 to 1 N.

〔2〕 Inner sleeve

a) Packing to antistatic bag

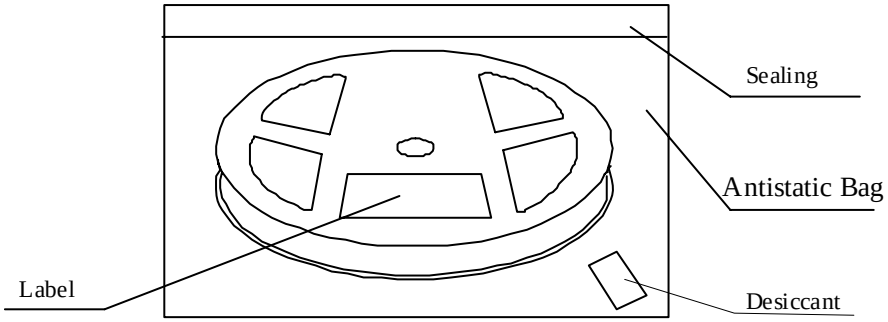

b) Packing to inner sleeve

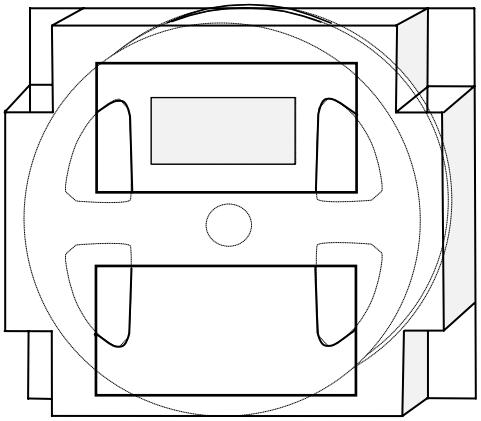

* There is also a case to put the two reels.

〔3〕 Shipping carton

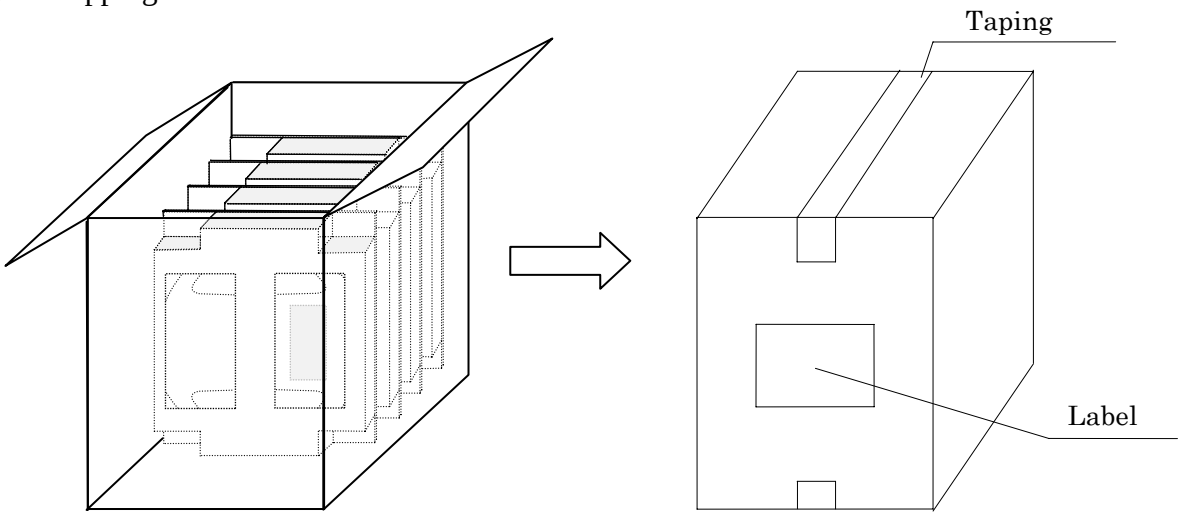

〔4〕 Marking

(1) Reel marking

・Reel marking shall consist of :

1) Parts name
2) Quantity
3) Manufacturing date or symbol
4) Manufacturer's date or symbol
5) Others (if necessary)

(2) Shipping carton marking

・Shipping carton marking shall consist of :

1) Parts name
2) Quantity

〔5〕 Quantity

・ 3000 pcs./reel

〔6〕 Storage environment

(1) Before open the packing, we recommend to keep less than +30 °C and 85 %RH of Humidity, and to use it less than 6 months after delivery.
(2) We recommend to open Package in immediately before use. After open Package, We recommend to keeps less than 6 month. No need dry air before soldering work if it is less than temperature +30 °C, 85 humidity %RH.
(3) Not to expose the sun.
(4) Not to storage with some erosive chemicals.
(5) Nothing is allowed to put on the reel or carton to prevent mechanical damage.

〔7〕 Handling

・To handle with care to prevent the damage of tape, reel and products.

- PROCESS QUALITY CONTROL -

No. SG210STF - 01 - ASE – 1　　CRYSTAL OSCILLATOR : SG-210STF　　SG210STF_Q_0001

’12.12.04

Manufacturing process chart

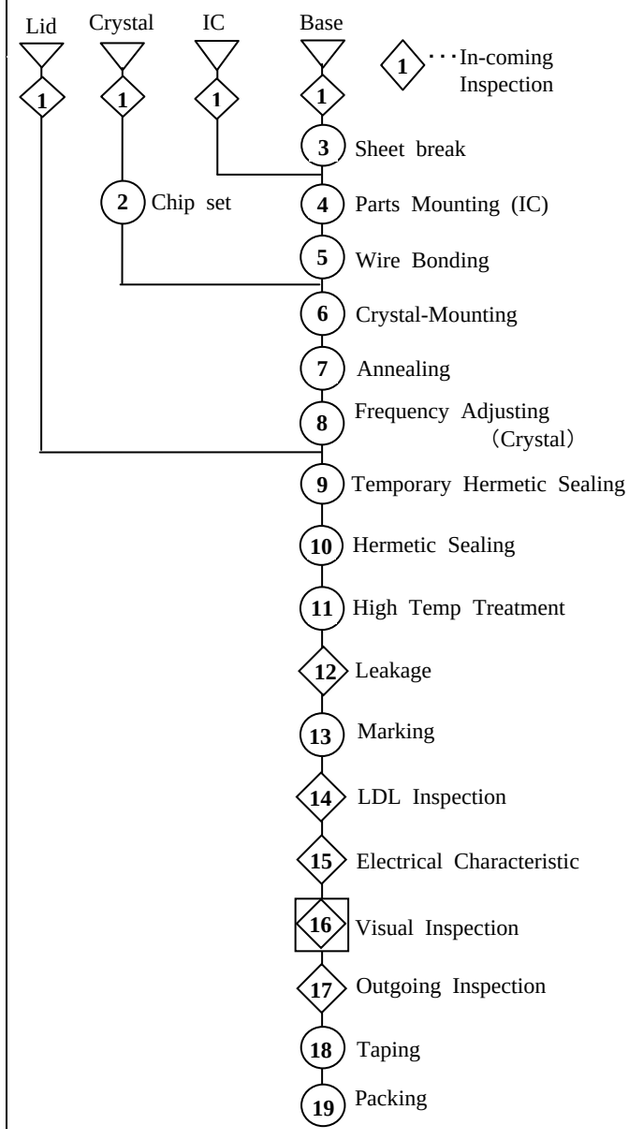

No.	Section In Charge	Standards	Inspection, Control Item	Instruments	Inspection Methods	Record
1	Inspection Section	Purchasing Specification Incoming Inspection Standard	Appearance Dimension	Microscope	Sampling	Data sheet
2	Production Section	Manufacturing Instruction Sheet	Appearance Peeling Strength	Microscope Scratch	Sampling	Data sheet
3	Production Section	Manufacturing Instruction Sheet	Appearance	Base array M/C	100% Inspection	Data sheet
4	Production Section	Manufacturing Instruction Sheet	–	–	–	–
5	Production Section	Manufacturing Instruction Sheet	Bonding strength	Gauge	Sampling	Data sheet
6	Production Section	Manufacturing Instruction Sheet	Appearance	Microscope	Sampling	Data sheet
7	Production Section	Manufacturing Instruction Sheet	–	–	–	–
8	Production Section	Manufacturing Instruction Sheet	Frequency	Counter	Sampling	Data sheet
9	Production Section	Manufacturing Instruction Sheet	–	–	–	–
10	Production Section	Manufacturing Instruction Sheet	–	–	–	–
11	Production Section	Manufacturing Instruction Sheet	–	–	–	–
12	Production Section	Manufacturing Instruction Sheet	Leakage Inspection	Measuring equipment	100% Inspection	Data sheet
13	Production Section	Manufacturing Instruction Sheet	Appearance	Visual Inspection	Sampling	Data sheet
14	Production Section	Manufacturing Instruction Sheet	Characteristic Inspection	Measuring equipment	100% Inspection	Data sheet
15	Production Section	Manufacturing Instruction Sheet	Electrical Characteristic	Measuring equipment	100% Inspection	Data sheet
16	Production Section	Manufacturing Instruction Sheet	Appearance	Microscope	100% Inspection	Data sheet
17	Production Section	Delivery Specifications Outgoing Inspection Standard	Electrical Characteristic	Measuring equipment	Sampling	Data sheet
18	Production Section	Manufacturing Instruction Sheet	Tape peeling Strength Quantity Frequency check function	Peeling strength test machine	Sampling 100% Inspection	Data sheet
19	Production Control Section	Manufacturing Instruction Sheet Daily Shipping List	Customers Type Quantity	–	–	Delivery Slip

Structure Diagram 構造図

Model 型式	**SG-210STF**	
Document No. 管理№	X1G00417-01-1	SG210STF_D_0001

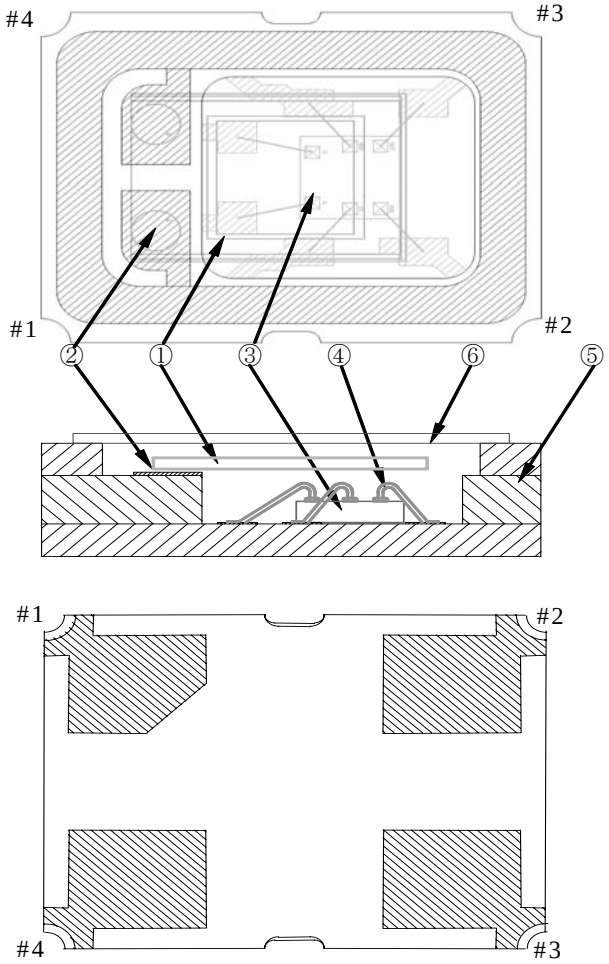

No.	Name of Part 部品名
⑥	Lid ﾘｯﾄﾞ
⑤	Package ﾊﾟｯｹｰｼﾞ
④	Bonding Wire ﾎﾞﾝﾃﾞｨﾝｸﾞﾜｲﾔｰ
③	IC IC
	IC Conductive Adhesive IC ﾏｳﾝﾄ材
②	Crystal adhesive 水晶振動子ﾏｳﾝﾄ材
①	Crystal Chip 水晶振動子

RELIABILITY TEST DATA

Product Name : SG-210STF

The Company evaluation condition

We evaluate environmental and mechanical characteristics by the following test condition . **No. F-G--1313-01-001E**

No.	ITEM	TEST CONDITIONS	VALUE *1		TEST Qty [n]	FAIL Qty [n]
			D f / f *2 [1 ± 10^{-6}]	Electrical characteristics		
1	High temperature storage	+125 ℃ × 1000 h	*3 ± 20	Satisfy specification after test	22	0
2	Low temperature storage	-40 ℃ × 1000 h	*3 ± 10		22	0
3	High temperature bias	+105 ℃ × Vcc Max. × 1000 h	*3 ± 10		22	0
4	Low temperature bias	-40 ℃ × Vcc Max. × 1000 h	*3 ± 10		22	0
5	Temperature humidity bias	+85 ℃ × 85 %RH × Vcc Max. × 1000 h	*3 ± 10		22	0
6	Temperature cycle	-40 ℃ ⇔ +125 ℃ 30 min at each temp. 100 cycles	*3 ± 10		22	0
7	Resistance to soldering heat	For convention reflow soldering furnace (3 times) Ref. IPC/JEDEC J-STD-020D.1	± 3		22	0
8	Shock	100 g dummy (EPSON TOYOCOM Standard) drop from 1 500 mm height on to the concrete 3 directions 10 times	± 3		22	0
9	Vibration	10 Hz to 55 Hz amplitude 0.75 mm 55 Hz to 500 Hz acceleration 98 m/s^2 10 Hz → 500 Hz → 10 Hz 15 min / cycle 6 h (2 h × 3 directions)	± 2		22	0
10	Seal	He leakage detector	1×10^{-9} Pa·m^3/s MAX		11	0
11	Solderability	Dip termination into solder bath at +235 ℃ ± 5 ℃ for 5 s (Using Rosin Flux)	Termination must be 95 % covered with fresh solder		11	0
12	Pull-off	10N press for 10s ± 1s Ref.EIAJ ED-4702	No Peeling-off at a solder part		11	0

Notes

1. *1 Each test done independently.
2. *2 Measuring 2 h to 24 h later leaving in room temperature after each test.
3. *3 Initial value shall be measured after 24 h storage at room temperature after pre-conditioning.Pre-conditioning: R

Qualification Data

Product Name : SG-210STF

Δ f / f

No. F-G--1313-01-002E

1. High temp. storage
+125℃ × 1 000 h

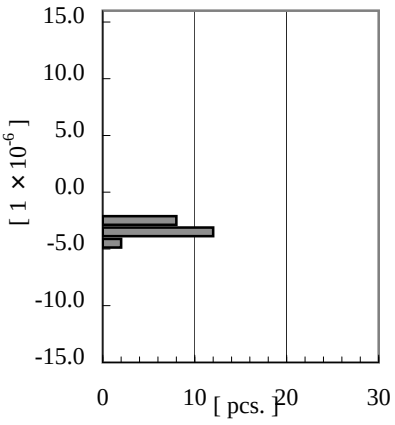

2. Low temp. storage
-40 ℃ × 1 000 h

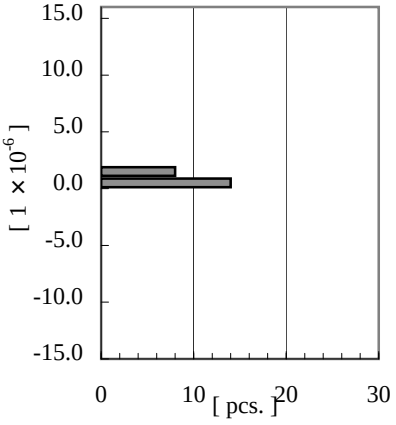

3. High temp. bias
+105 ℃ × spec bias × 1 000 h

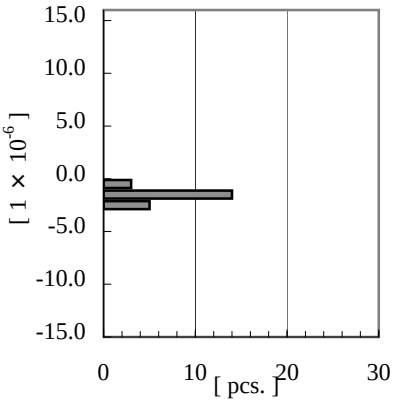

4. Low temp. bias
-40℃ × spec bias × 1 000 h

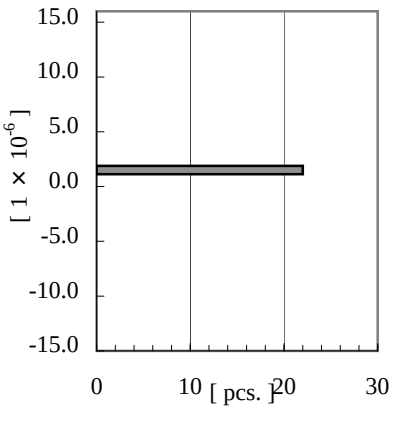

5.Temp humidity bias
85℃ × 85%RH × spec bias × 1 000h

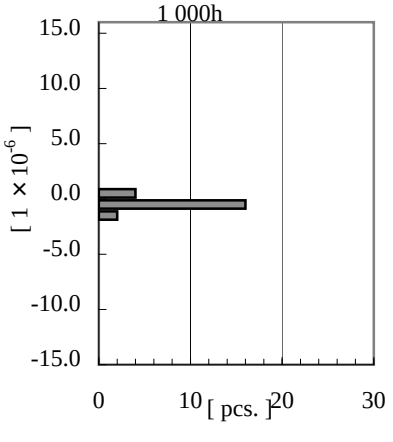

6. Temp. cycle
-40 ℃ ⇔ +125 ℃ 100 cycles

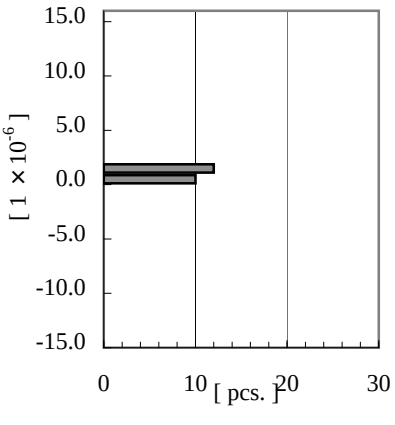

7. Resistance to soldering heat
For convention reflow soldering furnace (3 times)

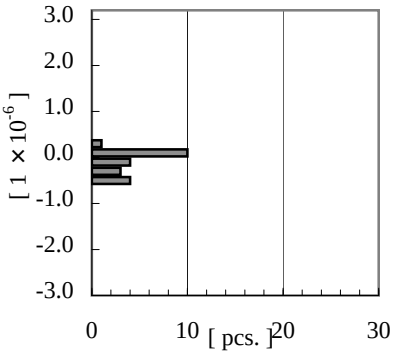

8. Shock
100g jig 1500mm height × 3 directions 10 times

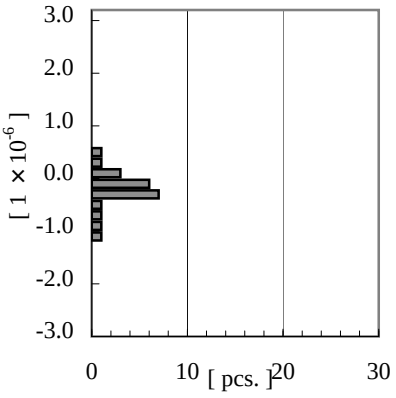

9. Vibration
10 Hz to 55 Hz amplitude 0.75 mm
55 Hz to 500 Hz acceleration 98 m/s^2
15 min / cycle
6 h (2 h × 3 directions)

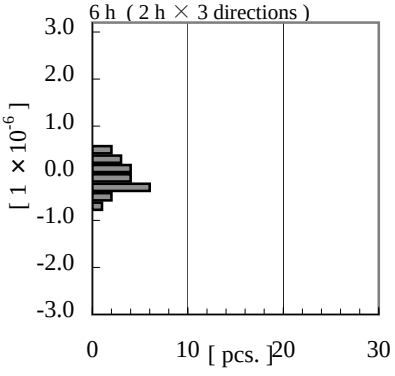

Qualification Data