PRODUCT SPECIFICATION SHEET

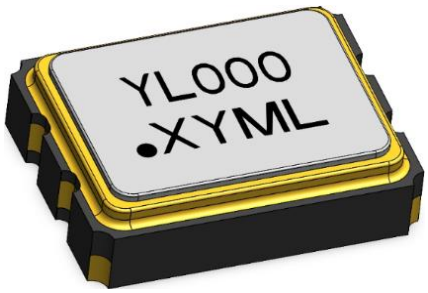

Customer	-		
Customer P/N	-		
Product Type	CMOS Crystal Oscillator		
Part Number	3CA2500009	Version	S0
Part Description	SMD CMOS CXO 3.2 x 2.5		
Nominal Frequency	125.000000MHz		

Prepared	Liu Feng
Reviewed	Huang Jining
Approved	Liu Feng
Date	2024-11-21

Customer's Approval & Date：

广东惠伦晶体科技股份有限公司
中国广东省东莞市黄江镇东环路鸡啼岗段68号
68 Donghuan Road, Jitigang Village, Huangjiang, Dongguan, Guangdong Province, P. R. China
WEB : http://www.dgylec.com/
TEL : +86 (0) 769 - 38879888
FAX : +86 (0) 769 - 38879889
EMAIL : yl@dgylec.com

RoHS COMPLIANT

Pb Lead-Free

Moisture Sensitivity Level 1

FAITH LONG CRYSTAL

TABLE OF CONTENTS

#	Item	Page
1	History of Specification Revision	3
2	Electrical Specifications	4
	2.1 Operation conditions	4
	2.2 Output characteristics	4
	2.3 Output enable / disable function	4
	2.4 Frequency stability	4
3	Product Design	5
	3.1 Package dimensions and pad functions	5
	3.2 Recommended land pattern	5
	3.3 Recommended reflow profile	5
	3.4 Illustration to product structure	6
4	Testing Circuit	7
5	Waveform Conditions	7
6	Reliability	8
	6.1 Mechanical endurance	8
	6.2 Environmental endurance	9
7	Marking and Packing	10
	7.1 Marking definition	10
	7.2 Packing	10
	7.3 SMD product packing standard	12
8	Environmental substance	13

FAITH LONG CRYSTAL

ATTENTION

[1] If you intend to use products on the controlling equipment that relate to medical, aeronautical, aerospace, military science, space and etc., please make sure to let us know your intentions in advance.

[2] Ultrasonic related process may cause damage to crystal blank by resonance itself. If ultrasonic related process is used, we strongly recommend to assess the damage risk under related ultrasonic conditions before use in production.

1. History of Specification Revision

Ver.	Contents	Date	Reviser	Remark
S0	Initial released.	2024-11-21	Li Xiang	

FAITH LONG CRYSTAL

2. Electrical Specifications

2.1 Operation conditions

#	Parameter	Min.	Typ.	Max.	Unit	Remark
1	Nominal frequency		125.0000000		MHz	-
2	Supply voltage (V_{DD})	-	3.3	-	V	V_{DD} ±5% variation
3	Current consumption	-	-	25	mA	V_{DD}=3.3V
4	Operating temperature range	-40	-	+85	°C	-
5	Storage temperature range	-55	-	+125	°C	-
6	Moisture sensitivity level		Level 1		°C	IPC/JEDEC J-STD-020F
7	ESD		HBM ≥ 2000V		-	JESD22-A114-B

2.2 Output characteristics

#	Parameter	Min.	Typ.	Max.	Unit	Remark
1	Output type		CMOS		-	-
2	Standard output load	-	15	-	pF	-
3	Output voltage high	90%V_{DD}	-	-	V	Level "1"
4	Output voltage low	-	-	10%V_{DD}	V	Level "0"
5	Rise time	-	-	10	ns	10% to 90% output swing
6	Fall time	-	-	10	ns	90% to 10% output swing
7	Duty cycle	45	50	55	%	Measured 50% of waveform
8	Start-up time	-	-	10	ms	-

2.3 Output enable / disable function

#	Parameter	Min.	Typ.	Max.	Unit	Remark
1	Output enable	70%V_{DD}	-	-	V	-
2	Output disable	-	-	30%V_{DD}	V	-

2.4 Frequency stability, phase noise and jitter characteristics

#	Parameter	Min.	Typ.	Max.	Unit	Remark
1	Frequency stability	-25	-	+25	ppm	Over all operating temperature range
2	Frequency aging	-3	-	+3	ppm	1st year

Measure equipment: Electrical characteristics is measured by S&A 280B or equivalent.

Standard atmospheric conditions:

Unless otherwise specified, the standard environmental conditions for performance measurement and tests are under ambient temperature at (25±3)°C and relative humidity: 40% to 70%.

FAITH LONG CRYSTAL

3. Product Design

3.1 Package dimensions and pad functions (Unit : mm)

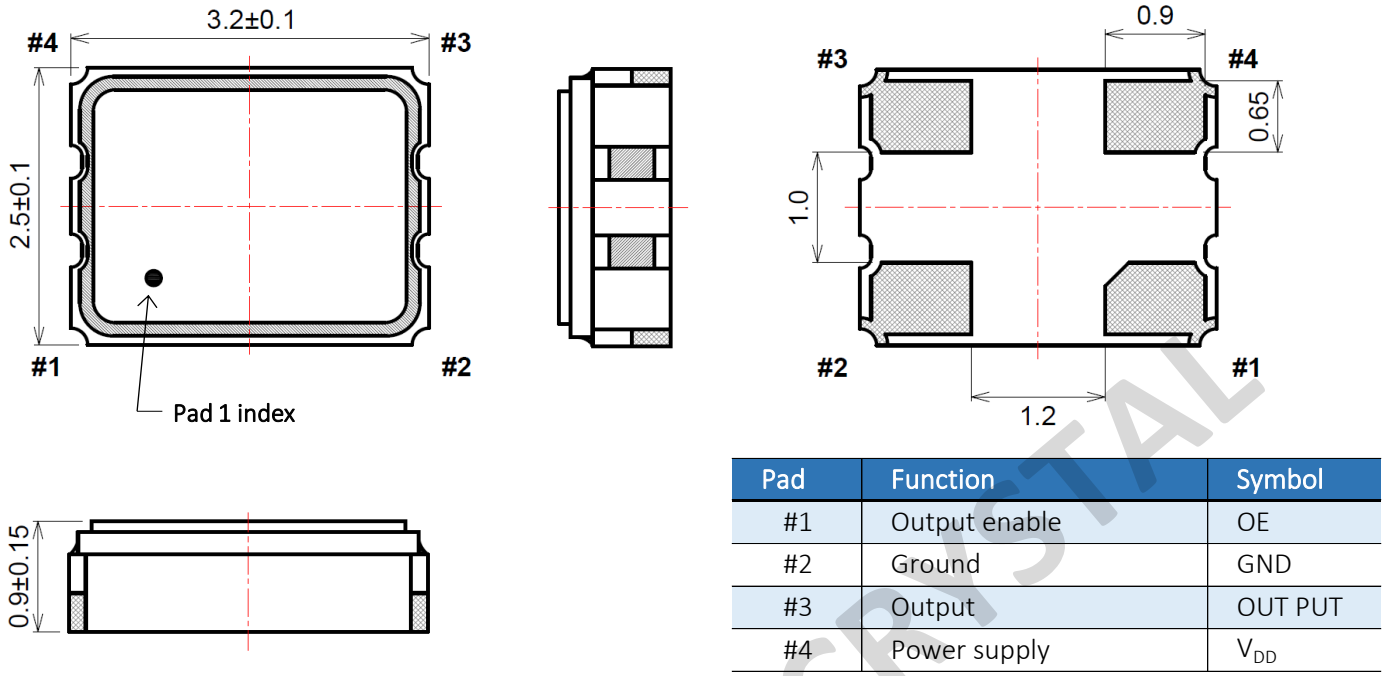

Pad	Function	Symbol
#1	Output enable	OE
#2	Ground	GND
#3	Output	OUT PUT
#4	Power supply	V_{DD}

3.2 Recommended land pattern (Unit : mm)

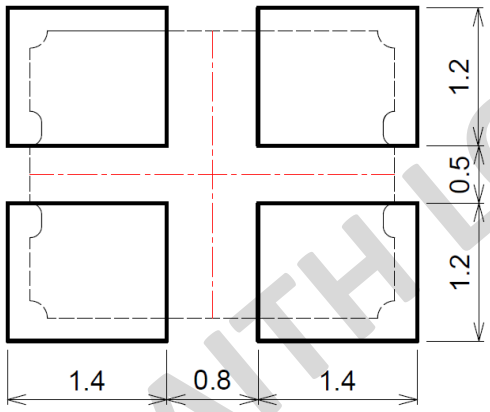

3.3 Recommended reflow profile

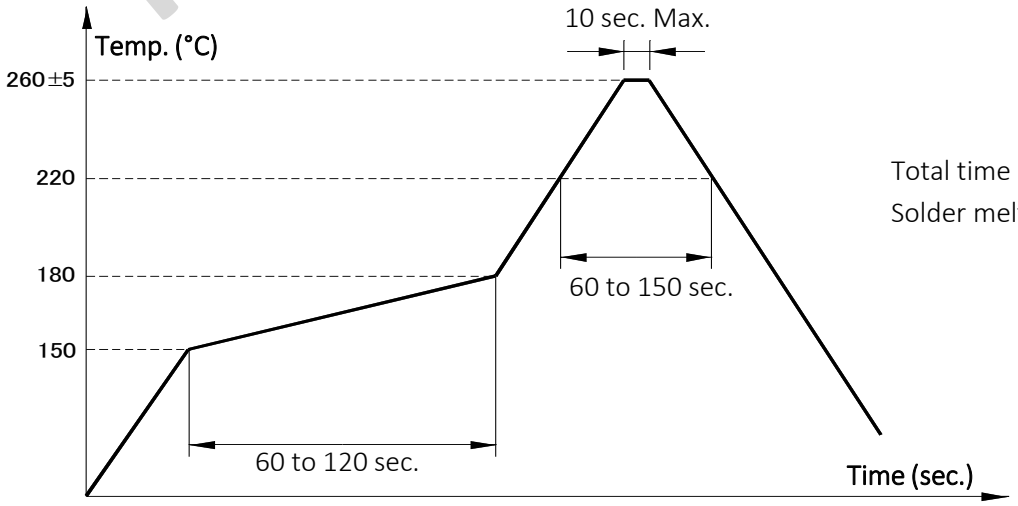

Total time : 360 sec. Max.
Solder melting point : 225°C

FAITH LONG CRYSTAL

3. Product Design (Cont.)

3.4 Illustration to product structure

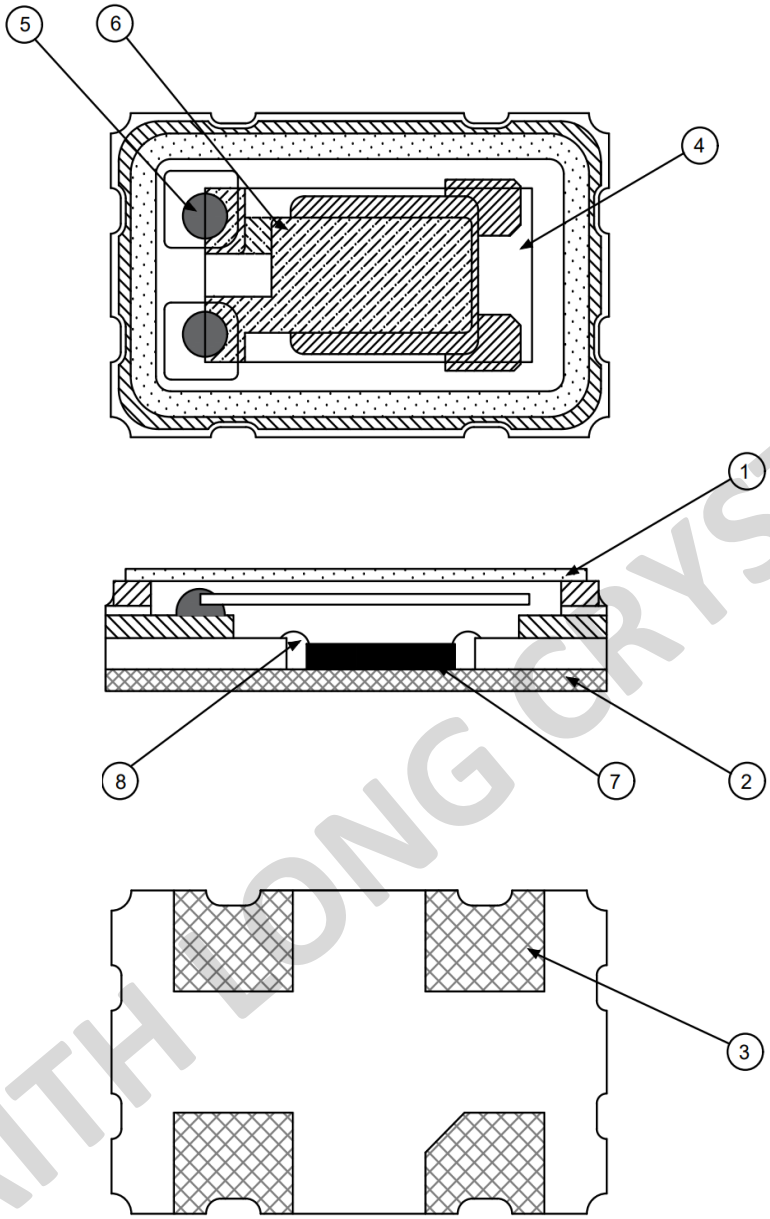

FAITH LONG CRYSTAL

#	Components	Materials	Finish/Specifications
1	Cap (Lid)	Kovar (Fe)	-
2	Base (Package)	Ceramic (Al_2O_3)	Alumina ceramics
3	Pad (Package)	Au	Tungsten metallization + Ni plating + Au plating
4	Crystal blank	SiO_2	-
5	Conductive adhesive	Ag	Silicone resin
6	Electrode	Noble metal	-
7	IC chip	Silicon (Si)	-
8	Bonding wire	Au	-

4. Testing Circuit

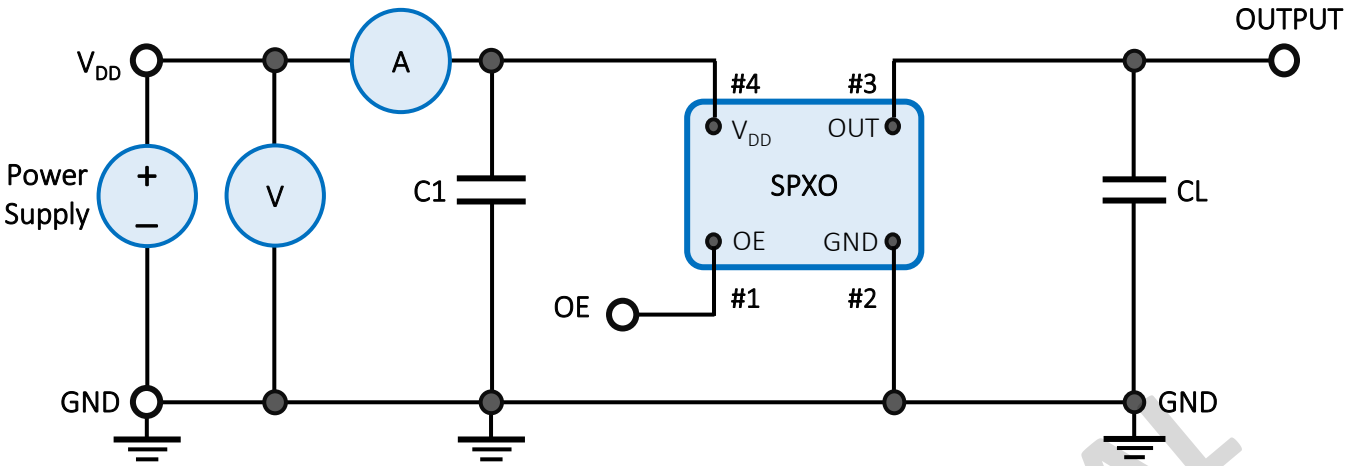

External Components:

Parts	Function	Recommended
C1	AC noise bypass for V_{DD}	10nF
CL	Load capacitance	15pF

Enable Control

Pad 1 input	Pad 3 output
Level High or open	Normal operation
Level Low	Output stopped

Note 1 : All the testing equipment are 50Ω terminated.

Note 2 : OE terminal is open connection except OE function test.

Note 3 : Power supply decoupling capacitor is recommended

5. Waveform Conditions

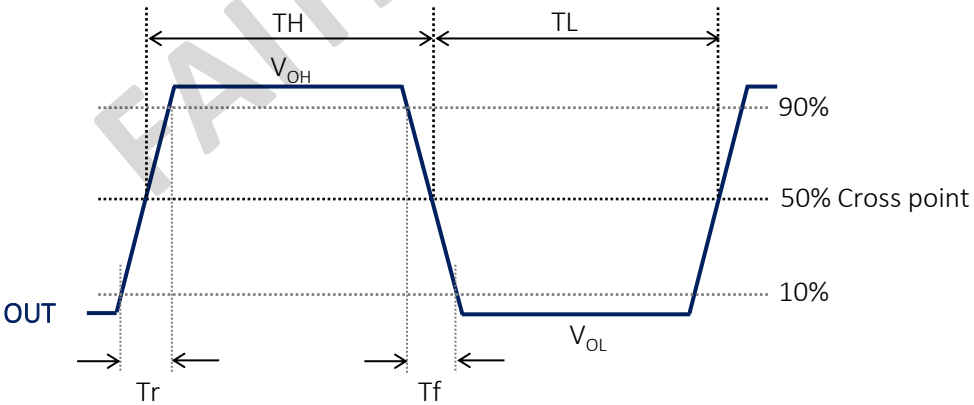

FAITH LONG CRYSTAL

6. Reliability

6.1 Mechanical endurance

#	Item	Test Condition	Reference
1	Drop test	Height : 150 cm Direction : free fall Test cycles : 3 times Hard board	JIS C6701
2	Mechanical shock	Acceleration : Half sine wave 1000 g Duration : 0.5 msec. Direction : Three mutually perpendicular axes Test cycles : 3 times for all 3 directions	MIL-STD-202 Method 213
3	Vibration	Frequency : (10 to 55) Hz Amplitude : 1.52 mm Sweep time : 2 hours Direction : Three perpendicular axes Duration : 2 hours for each direction (total 6 hours)	MIL-STD-202 Method 201
4	Solderability	Temperature : 245°C ± 5°C Immersing depth : 0.5 mm minimum Immersion time : (5 ± 1) sec. Flux : Rosin resin methyl alcohol solvent (1:4)	J-STD-002
5	Resistance to soldering heat	Pre-heat temperature : 125°C Pre-heat time : 60 sec to 120 sec. Test temperature : 260°C ± 5°C Test time : (10 ± 1) sec.	MIL-STD-202 Method 210

6.2 Environmental endurance

#	Item	Test Condition	Reference
1	High temperature storage (Aging)	Temperature : +125°C ± 3°C Duration : 500 hours	MIL-STD-202 Method 108
2	Low temperature storage	Temperature : -40°C ± 3°C Duration : 500 hours	ICE 600068-2-1

FAITH LONG CRYSTAL

6. Reliability (Cont.)

6.2 Environmental endurance (Cont.)

#	Item	Test Condition	Reference
3	Thermal shock	Total 100 cycles of the following temperature cycle 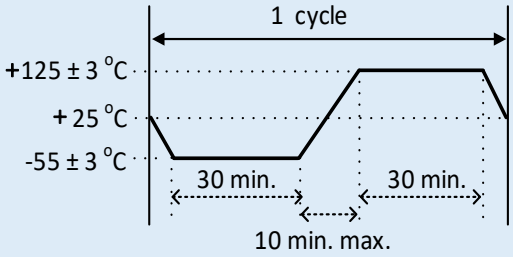	MIL-STD-883 Method 1011.9
4	High temperature operation	Temperature : +85 °C Duration : V_{DD} biased for 1000 hours	MIL-STD-202 Method 108
5	Low temperature operation	Temperature : -40 °C Duration : V_{DD} biased for 1000 hours	ICE 600068-2-1

FAITH LONG CRYSTAL

7. Marking and Packing

7.1 Marking definition

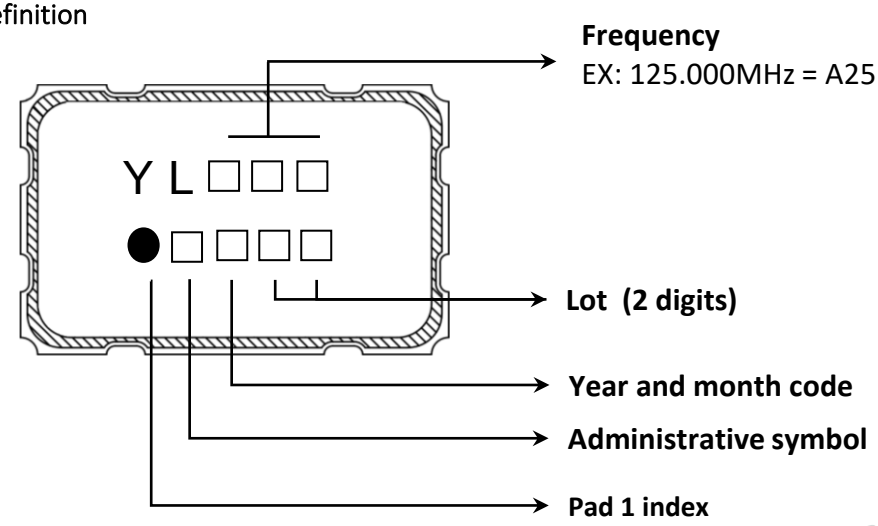

Table of Year and Month code

Year \ Month	JAN	FEB	MAR	APR	MAY	JUN	JUL	AUG	SEP	OCT	NOV	DEC
2021	2025	A	B	C	D	E	F	G	H	J	K	L	M
2022	2026	N	P	Q	R	S	T	U	V	W	X	Y	Z
2023	2027	a	b	c	d	e	f	g	h	j	k	l	m
2024	2028	n	p	q	r	s	t	u	v	w	x	y	z

7.2 Packing (EIA-481-2)

8mm-4mm, 3,000pcs/reel, Φ178

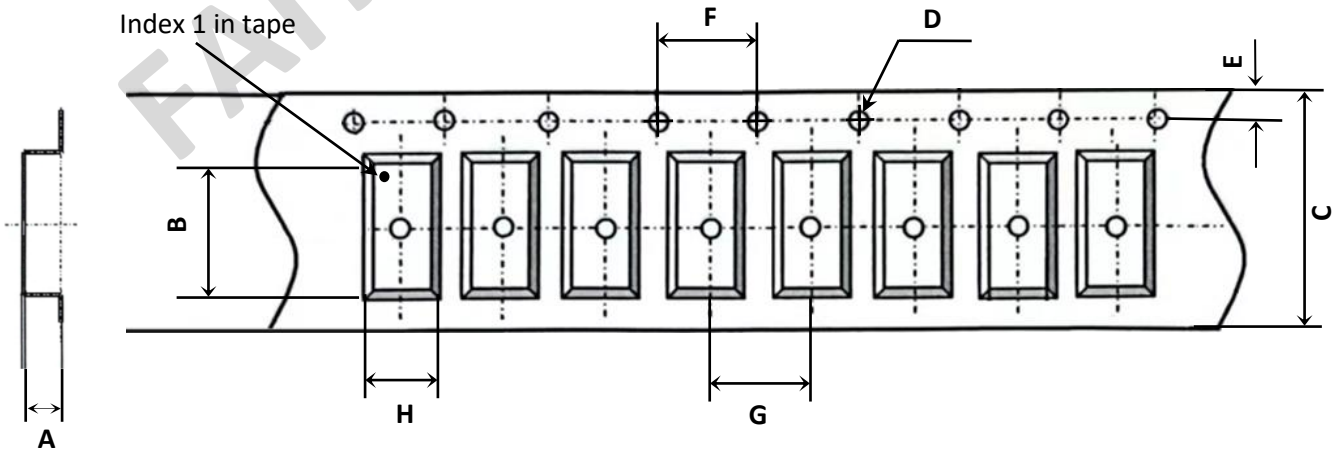

Unwinding direction

Tape dimension (Unit : mm)							
A	B	C	D	E	F	G	H
1.45±0.05	3.50±0.1	8.0±0.3	$1.50_{-0}^{+0.1}$	1.75±0.1	4.00±0.2	4.00±0.1	2.80±0.1

FAITH LONG CRYSTAL

7. Marking and Packing (Cont.)

7.2 Packing (EIA-481-2) (Cont.)

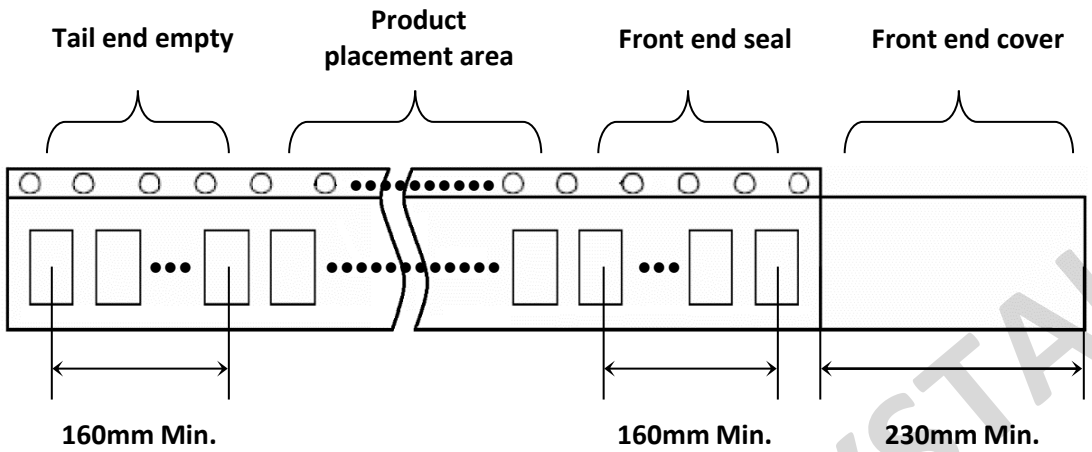

Unwinding direction

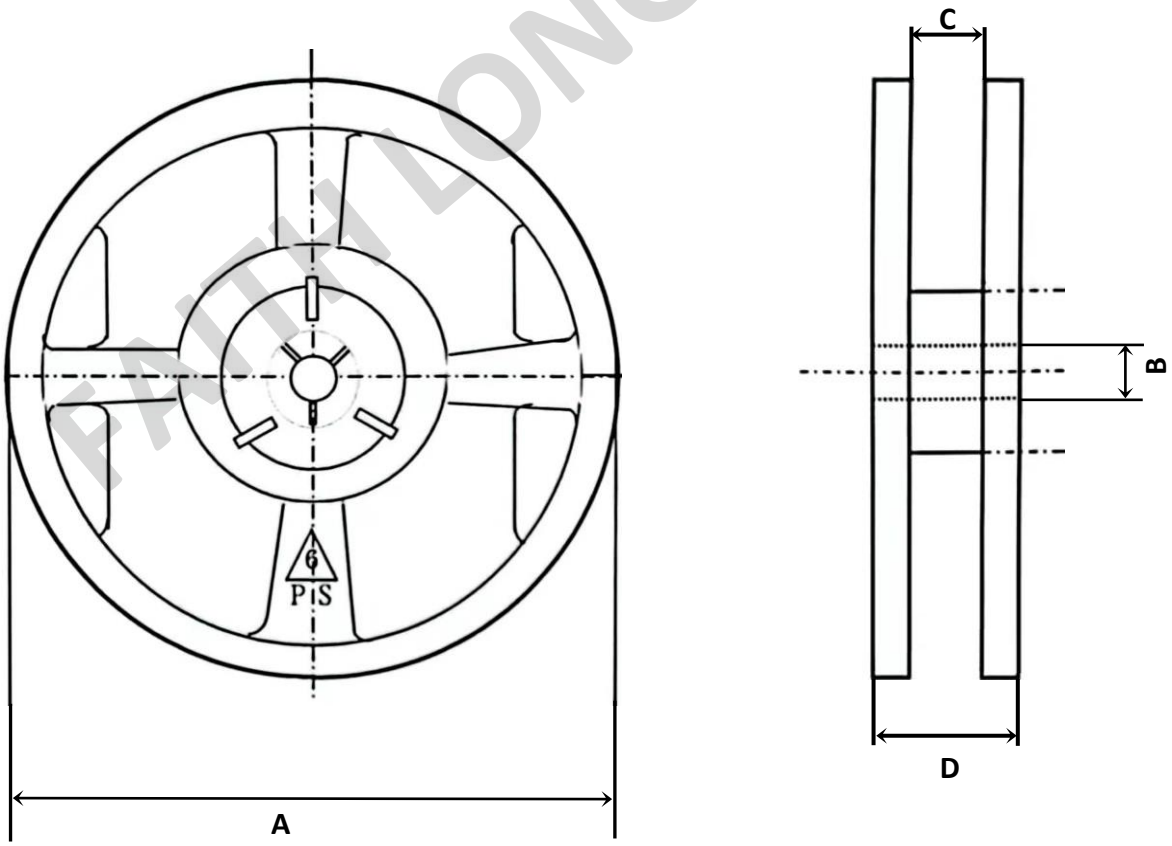

3,000 pcs/reel

Reel dimension (Unit : mm)			
A	B	C	D
178±2.0	13.2±0.5	9.0±0.5	11.5±1.4

FAITH LONG CRYSTAL

7. Marking and Packing (Cont.)

7.3 SMD product packing standard

Out-going packing instruction

Reel packing	Inner packing	Carton
Name: reel Standard: diameter 18cm Material: plastics	Name: bubble wrap Standard: 430×330×20mm Material: HDPE Quantity: 15 reels	Name: carton Standard: 400×400×280mm Material: AB corrugated paper Quantity: 4 bags
		
		

The label instruction

Label drawing	Mark	Name of article	Items	Size	Printing
	L1	Bar Code Label (Chintz Paper)	1.Part No. 2.Lot No. 3.Q'ty 4.Freq	70x50mm	White
	L2	Bar Code Label (Chintz Paper)	1.Part No. 2.Date Code 3.Q'ty 4.Freq	70x50mm	White

Remark: The above instruction of label drawing is used for template and may vary with different product specifications . If customer has specified requirements for labels packaging, please provide the operation procedure.

Product storage conditions:

[1] Temperature: 15 to 35°C.

[2] Humidity: 30 to 70% RH.

[3] Time: within 6 months after delivery.

[4] Please store the products in a dry, clean, well-ventilated area and avoid direct sunlight exposure, heat, and vibration.

FAITH LONG CRYSTAL

8. Environmental substance

#	Banned substances	Max. concentration (ppm; mg/kg)	
		Products	Packing
1	Cadmium (Cd) and cadmium compounds 镉及镉化合物	100	100
2	Lead (Pb) and lead compounds 铅及铅化合物	1,000	100
3	Mercury (Hg) and mercury compounds 汞及汞化合物	1,000	100
4	Hexavalent-chromium VI (Cr+6) 六价铬化合物	1,000	100
5	Polybrominated biphenyls (PBBs) 聚溴联苯 PBB	1,000	N/A
6	Polybrominated diphenyl ethers (PBDEs) 聚溴二苯醚 PBDE	1,000	N/A
7	Di (2-ethylhexyl) phthalate (DEHP) 邻苯二甲酸二(2-乙基己基)酯 DEHP	1,000	N/A
8	Butyl benzyl phthalate (BBP) 邻苯二甲酸丁苄酯 BBP	1,000	N/A
9	Dibutyl phthalate (DBP) 邻苯二甲酸二丁酯 DBP	1,000	N/A
10	Diisobutyl Phthalate (DIBP) 邻苯二甲酸二异丁酯 DIBP	1,000	N/A
11	Fluorine (F), Chlorine (Cl), Bromine (Br), Iodine (I) 氟(F)、氯(Cl)、溴(Br)、碘(I)	900, 900, 900, 900 Note : Br + Cl < 1,000	N/A
12	Heavy metals (Hg, Cd, PB, Cr+6, PBBs and PBDEs) in packing materials 包装材料中重金属(汞、镉、六价铬、铅、PBB、PBDE)之总量	N/A	100 铅(Pb) + 镉(Cd) + 汞(Hg) + 六价铬(Cr+6) <100ppm
13	(SVHC) Substances of very high concern 高度关注物质	1,000	N/A

FAITH LONG CRYSTAL