# PRODUCT SPECIFICATION SHEET

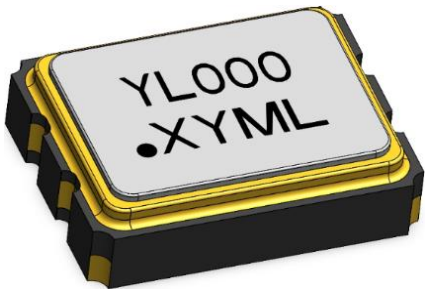


| | | | |
|---|---|---|---|
| **Customer** | - | | |
| **Customer P/N** | - | | |
| **Product Type** | CMOS Crystal Oscillator | | |
| **Part Number** | 3C20000009 | Version | S0 |
| **Part Description** | SMD CMOS CXO 3.2 x 2.5 | | |
| **Nominal Frequency** | 20.000000MHz | | |

| | |
|---|---|
| **Prepared** | Liu Feng |
| **Reviewed** | Huang Jining |
| **Approved** | Liu Feng |
| **Date** | 2024-11-5 |

**Customer's Approval & Date：**

广东惠伦晶体科技股份有限公司
中国广东省东莞市黄江镇东环路鸡啼岗段68号
68 Donghuan Road, Jitigang Village, Huangjiang, Dongguan, Guangdong Province, P. R. China
WEB : http://www.dgylec.com/
TEL : +86 ( 0 ) 769 - 38879888
FAX : +86 ( 0 ) 769 - 38879889
EMAIL : yl@dgylec.com

RoHS COMPLIANT

Pb Lead-Free

Moisture Sensitivity Level 1

FAITH LONG CRYSTAL

TABLE OF CONTENTS


| # | Item | Page |
|---|---|---|
| 1 | History of Specification Revision | 3 |
| 2 | Electrical Specifications | 4 |
| | 2.1 Operation conditions | 4 |
| | 2.2 Output characteristics | 4 |
| | 2.3 Output enable / disable function | 4 |
| | 2.4 Frequency stability | 4 |
| 3 | Product Design | 5 |
| | 3.1 Package dimensions and pad functions | 5 |
| | 3.2 Recommended land pattern | 5 |
| | 3.3 Recommended reflow profile | 5 |
| | 3.4 Illustration to product structure | 6 |
| 4 | Testing Circuit | 7 |
| 5 | Waveform Conditions | 7 |
| 6 | Reliability | 8 |
| | 6.1 Mechanical endurance | 8 |
| | 6.2 Environmental endurance | 9 |
| 7 | Marking and Packing | 10 |
| | 7.1 Marking definition | 10 |
| | 7.2 Packing | 10 |
| | 7.3 SMD product packing standard | 12 |
| 8 | Environmental substance | 13 |


FAITH LONG CRYSTAL

ATTENTION

[1] If you intend to use products on the controlling equipment that relate to medical, aeronautical, aerospace, military science, space and etc., please make sure to let us know your intentions in advance.

[2] Ultrasonic related process may cause damage to crystal blank by resonance itself. If ultrasonic related process is used, we strongly recommend to assess the damage risk under related ultrasonic conditions before use in production.

## 1. History of Specification Revision

| Ver. | Contents | Date | Reviser | Remark |
|---|---|---|---|---|
| S0 | Initial released. | 2024-11-5 | Li Xiang | |
| | | | | |
| | | | | |
| | | | | |
| | | | | |
| | | | | |
| | | | | |
| | | | | |

FAITH LONG CRYSTAL

## 2. Electrical Specifications

### 2.1 Operation conditions

| # | Parameter | Min. | Typ. | Max. | Unit | Remark |
|---|---|---|---|---|---|---|
| 1 | Nominal frequency | | 20.0000000 | | MHz | - |
| 2 | Supply voltage ($V_{DD}$) | - | 3.30 | - | V | $V_{DD}$ ±5% variation |
| 3 | Current consumption | - | - | 6 | mA | $V_{DD}$=3.3V |
| 4 | Operating temperature range | -40 | - | +85 | °C | - |
| 5 | Storage temperature range | -55 | - | +125 | °C | - |
| 6 | Moisture sensitivity level | | Level 1 | | °C | IPC/JEDEC J-STD-020F |
| 7 | ESD | | HBM ≥ 2000V | | - | JESD22-A114-B |

### 2.2 Output characteristics

| # | Parameter | Min. | Typ. | Max. | Unit | Remark |
|---|---|---|---|---|---|---|
| 1 | Output type | | CMOS | | - | - |
| 2 | Standard output load | - | 15 | - | pF | - |
| 3 | Output voltage high | 90%$V_{DD}$ | - | - | V | Level "1" |
| 4 | Output voltage low | - | - | 10%$V_{DD}$ | V | Level "0" |
| 5 | Rise time | - | - | 5 | ns | 10% to 90% output swing |
| 6 | Fall time | - | - | 5 | ns | 90% to 10% output swing |
| 7 | Duty cycle | 45 | 50 | 55 | % | Measured 50% of waveform |
| 8 | Start-up time | - | - | 10 | ms | - |

### 2.3 Output enable / disable function

| # | Parameter | Min. | Typ. | Max. | Unit | Remark |
|---|---|---|---|---|---|---|
| 1 | Output enable | 70%$V_{DD}$ | - | - | V | - |
| 2 | Output disable | - | - | 30%$V_{DD}$ | V | - |

### 2.4 Frequency stability, phase noise and jitter characteristics

| # | Parameter | Min. | Typ. | Max. | Unit | Remark |
|---|---|---|---|---|---|---|
| 1 | Frequency stability | -25 | - | +25 | ppm | Over all operating temperature range |
| 2 | Frequency aging | -3 | - | +3 | ppm | 1st year |

**Measure equipment:** Electrical characteristics is measured by S&A 280B or equivalent.

**Standard atmospheric conditions:**

Unless otherwise specified, the standard environmental conditions for performance measurement and tests are under ambient temperature at (25±3)°C and relative humidity: 40% to 70%.

FAITH LONG CRYSTAL

## 3. Product Design

### 3.1 Package dimensions and pad functions (Unit : mm)

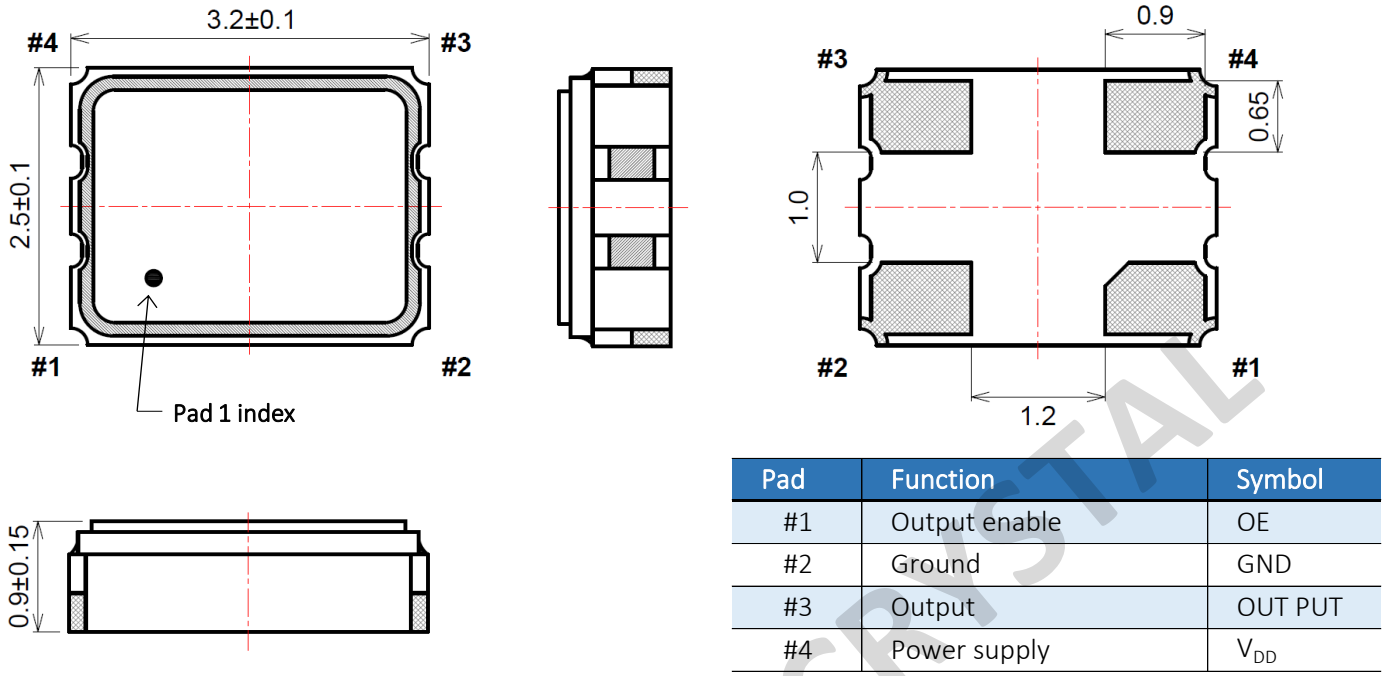


| Pad | Function | Symbol |
|---|---|---|
| #1 | Output enable | OE |
| #2 | Ground | GND |
| #3 | Output | OUT PUT |
| #4 | Power supply | $V_{DD}$ |

### 3.2 Recommended land pattern (Unit : mm)

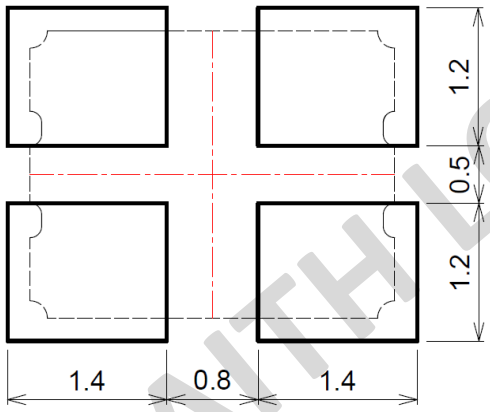


### 3.3 Recommended reflow profile

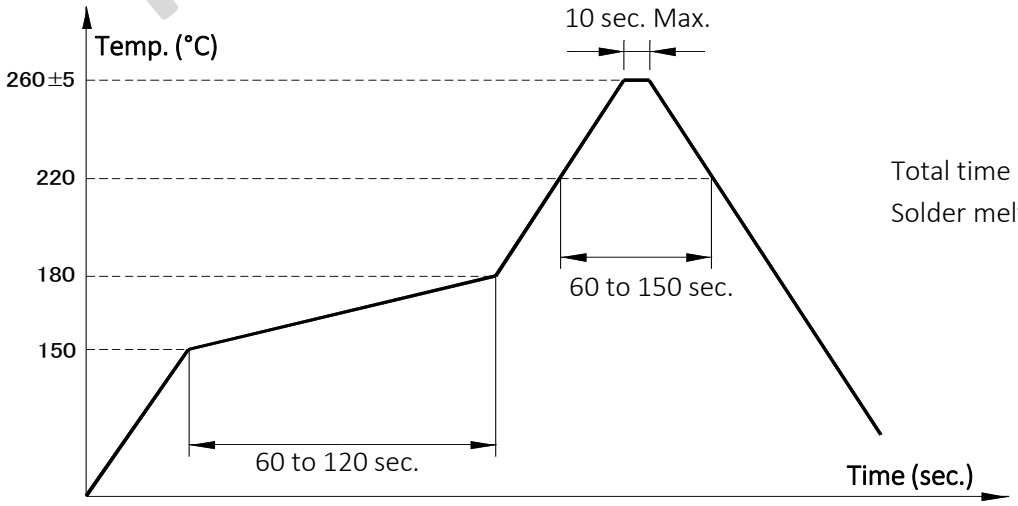


Total time : 360 sec. Max.
Solder melting point : 225°C

FAITH LONG CRYSTAL

## 3. Product Design (Cont.)

### 3.4 Illustration to product structure

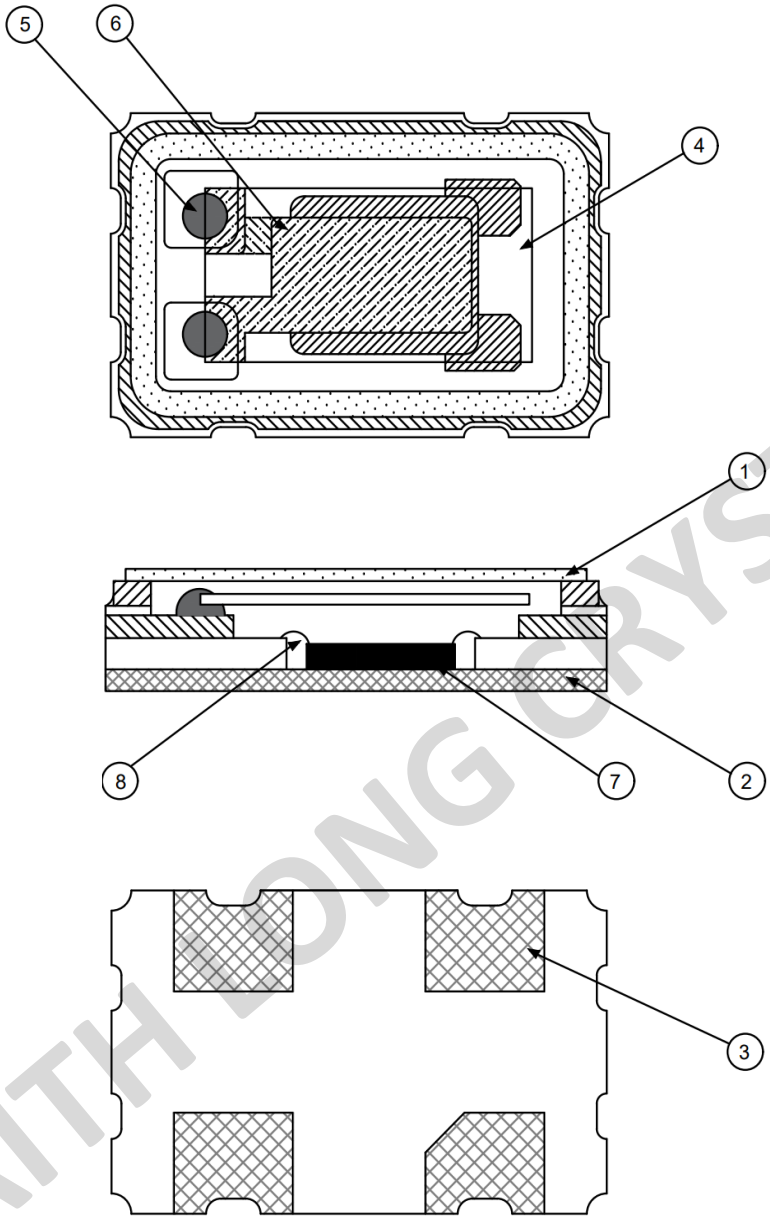


FAITH LONG CRYSTAL

| # | Components | Materials | Finish/Specifications |
|---|---|---|---|
| 1 | Cap (Lid) | Kovar (Fe) | - |
| 2 | Base (Package) | Ceramic ($Al_2O_3$) | Alumina ceramics |
| 3 | Pad (Package) | Au | Tungsten metallization + Ni plating + Au plating |
| 4 | Crystal blank | $SiO_2$ | - |
| 5 | Conductive adhesive | Ag | Silicone resin |
| 6 | Electrode | Noble metal | - |
| 7 | IC chip | Silicon (Si) | - |
| 8 | Bonding wire | Au | - |

## 4. Testing Circuit

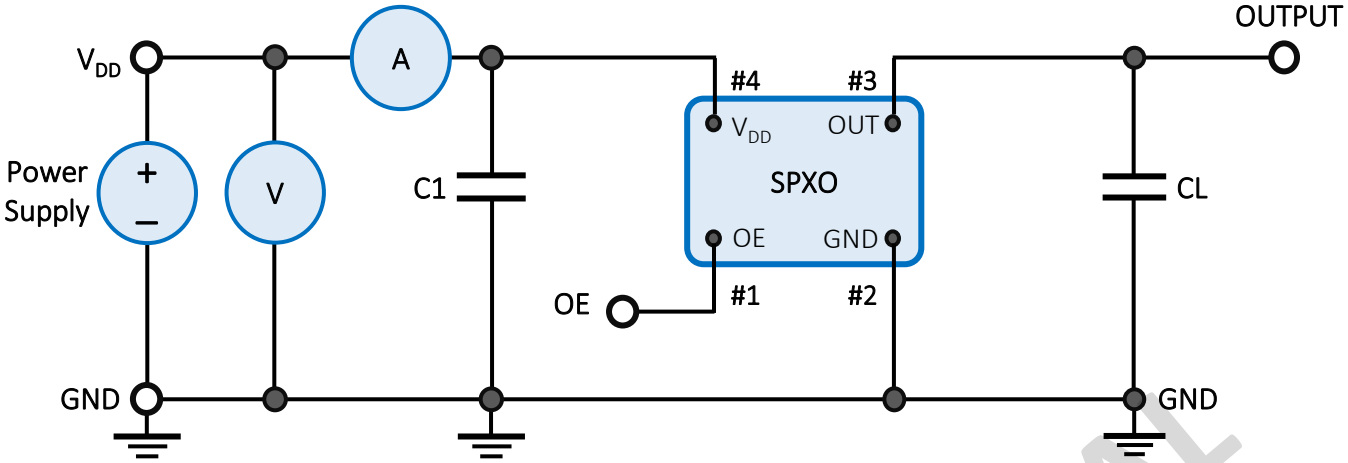


External Components:

| Parts | Function | Recommended |
|---|---|---|
| C1 | AC noise bypass for $V_{DD}$ | 10nF |
| CL | Load capacitance | 15pF |

Enable Control

| Pad 1 input | Pad 3 output |
|---|---|
| Level High or open | Normal operation |
| Level Low | Output stopped |

Note 1 : All the testing equipment are 50Ω terminated.

Note 2 : OE terminal is open connection except OE function test.

Note 3 : Power supply decoupling capacitor is recommended

## 5. Waveform Conditions

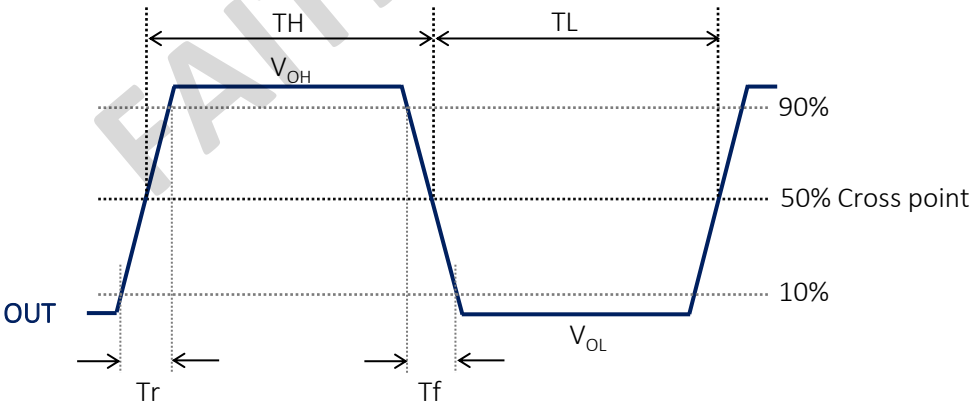


FAITH LONG CRYSTAL

## 6. Reliability

### 6.1 Mechanical endurance

| # | Item | Test Condition | Reference |
|---|---|---|---|
| 1 | Drop test | Height : 150 cm<br>Direction : free fall<br>Test cycles : 3 times<br>Hard board | JIS C6701 |
| 2 | Mechanical shock | Acceleration : Half sine wave 1000 g<br>Duration : 0.5 msec.<br>Direction : Three mutually perpendicular axes<br>Test cycles : 3 times for all 3 directions | MIL-STD-202<br>Method 213 |
| 3 | Vibration | Frequency : (10 to 55) Hz<br>Amplitude : 1.52 mm<br>Sweep time : 2 hours<br>Direction : Three perpendicular axes<br>Duration : 2 hours for each direction (total 6 hours) | MIL-STD-202<br>Method 201 |
| 4 | Solderability | Temperature : 245°C ± 5°C<br>Immersing depth : 0.5 mm minimum<br>Immersion time : (5 ± 1) sec.<br>Flux : Rosin resin methyl alcohol solvent (1:4) | J-STD-002 |
| 5 | Resistance to soldering heat | Pre-heat temperature : 125°C<br>Pre-heat time : 60 sec to 120 sec.<br>Test temperature : 260°C ± 5°C<br>Test time : (10 ± 1) sec. | MIL-STD-202<br>Method 210 |

### 6.2 Environmental endurance

| # | Item | Test Condition | Reference |
|---|---|---|---|
| 1 | High temperature storage (Aging) | Temperature : +125°C ± 3°C<br>Duration : 500 hours | MIL-STD-202<br>Method 108 |
| 2 | Low temperature storage | Temperature : -40°C ± 3°C<br>Duration : 500 hours | ICE 600068-2-1 |

FAITH LONG CRYSTAL

## 6. Reliability (Cont.)

### 6.2 Environmental endurance (Cont.)

| # | Item | Test Condition | Reference |
|---|---|---|---|
| 3 | Thermal shock | Total 100 cycles of the following temperature cycle 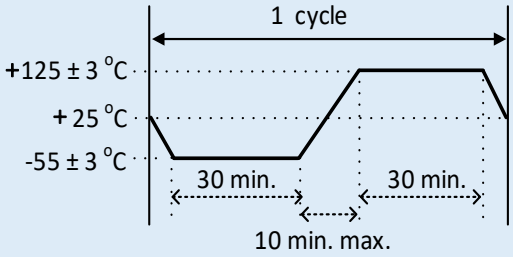  | MIL-STD-883<br>Method 1011.9 |
| 4 | High temperature operation | Temperature : +85 °C<br>Duration : $V_{DD}$ biased for 1000 hours | MIL-STD-202<br>Method 108 |
| 5 | Low temperature operation | Temperature : -40 °C<br>Duration : $V_{DD}$ biased for 1000 hours | ICE 600068-2-1 |

FAITH LONG CRYSTAL

## 7. Marking and Packing

### 7.1 Marking definition

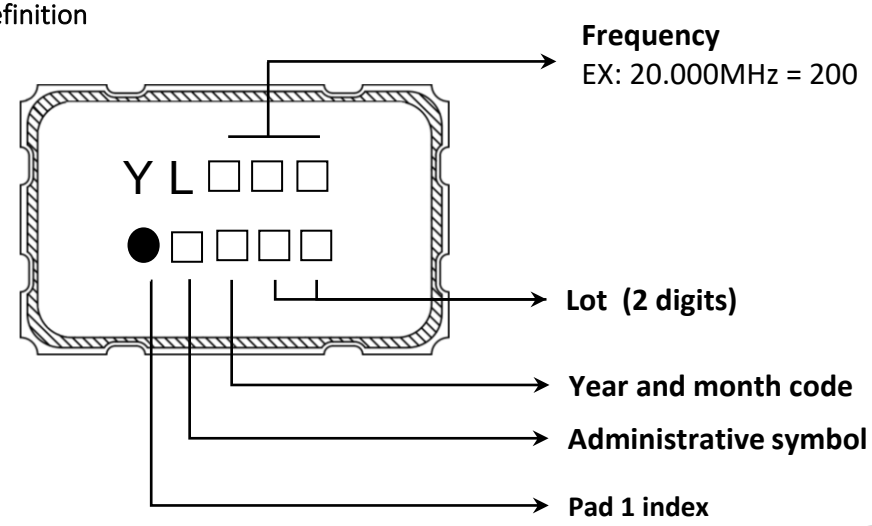


Table of Year and Month code

| Year \ Month | JAN | FEB | MAR | APR | MAY | JUN | JUL | AUG | SEP | OCT | NOV | DEC |
|---|---|---|---|---|---|---|---|---|---|---|---|---|
| 2021 | 2025 | A | B | C | D | E | F | G | H | J | K | L | M |
| 2022 | 2026 | N | P | Q | R | S | T | U | V | W | X | Y | Z |
| 2023 | 2027 | a | b | c | d | e | f | g | h | j | k | l | m |
| 2024 | 2028 | n | p | q | r | s | t | u | v | w | x | y | z |

### 7.2 Packing (EIA-481-2)

8mm-4mm, 3,000pcs/reel, Φ178

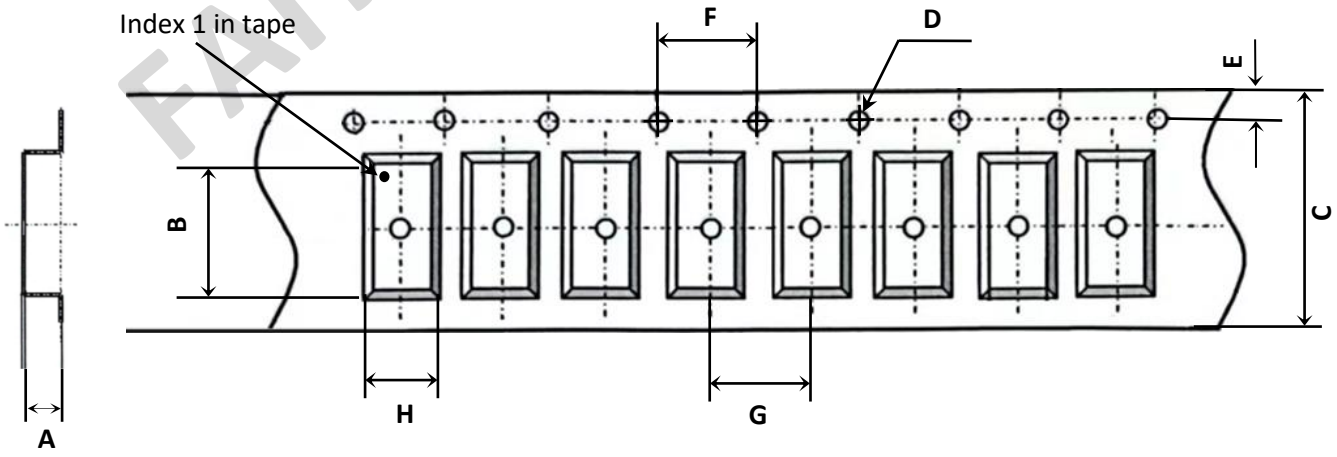


**Unwinding direction**

| Tape dimension (Unit : mm) | | | | | | | |
|---|---|---|---|---|---|---|---|
| A | B | C | D | E | F | G | H |
| 1.45±0.05 | 3.50±0.1 | 8.0±0.3 | $1.50_{-0}^{+0.1}$ | 1.75±0.1 | 4.00±0.2 | 4.00±0.1 | 2.80±0.1 |

FAITH LONG CRYSTAL

7. Marking and Packing (Cont.)

7.2 Packing (EIA-481-2) (Cont.)

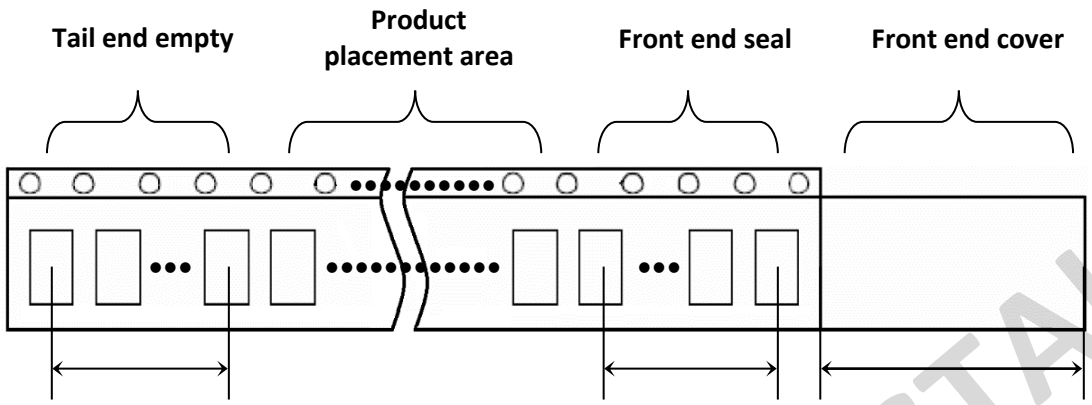


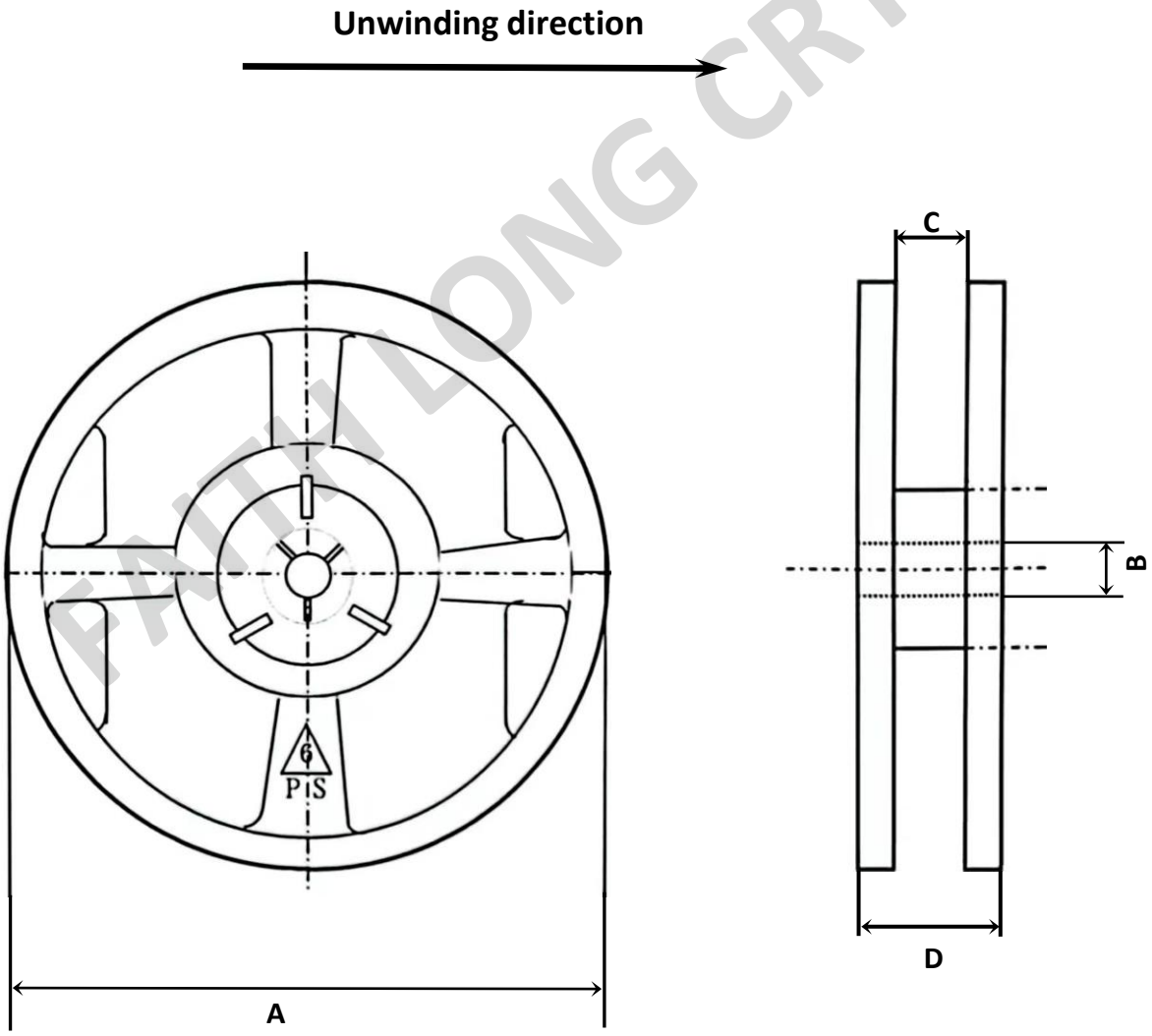


3,000 pcs/reel

| Reel dimension (Unit : mm) | | | |
|---|---|---|---|
| A | B | C | D |
| 178±2.0 | 13.2±0.5 | 9.0±0.5 | 11.5±1.4 |

FAITH LONG CRYSTAL

## 7. Marking and Packing (Cont.)

### 7.3 SMD product packing standard

Out-going packing instruction

| Reel packing | Inner packing | Carton |
|---|---|---|
| Name: reel<br>Standard: diameter 18cm<br>Material: plastics | Name: bubble wrap<br>Standard: 430×330×20mm<br>Material: HDPE<br>Quantity: 15 reels | Name: carton<br>Standard: 400×400×280mm<br>Material: AB corrugated paper<br>Quantity: 4 bags |
|  |  |  |
|  |  |  |

The label instruction

| Label drawing | Mark | Name of article | Items | Size | Printing |
|---|---|---|---|---|---|
|  | L1 | Bar Code Label<br>(Chintz Paper) | 1.Part No.<br>2.Lot No.<br>3.Q'ty<br>4.Freq | 70x50mm | White |
|  | L2 | Bar Code Label<br>(Chintz Paper) | 1.Part No.<br>2.Date Code<br>3.Q'ty<br>4.Freq | 70x50mm | White |

Remark: The above instruction of label drawing is used for template and may vary with different product specifications . If customer has specified requirements for labels packaging, please provide the operation procedure.

Product storage conditions:

[1] Temperature: 15 to 35°C.

[2] Humidity: 30 to 70% RH.

[3] Time: within 6 months after delivery.

[4] Please store the products in a dry, clean, well-ventilated area and avoid direct sunlight exposure, heat, and vibration.

FAITH LONG CRYSTAL

## 8. Environmental substance

| # | Banned substances | Max. concentration (ppm; mg/kg) | |
|---|---|---|---|
| | | Products | Packing |
| 1 | Cadmium (Cd) and cadmium compounds<br>镉及镉化合物 | 100 | 100 |
| 2 | Lead (Pb) and lead compounds<br>铅及铅化合物 | 1,000 | 100 |
| 3 | Mercury (Hg) and mercury compounds<br>汞及汞化合物 | 1,000 | 100 |
| 4 | Hexavalent-chromium VI (Cr+6)<br>六价铬化合物 | 1,000 | 100 |
| 5 | Polybrominated biphenyls (PBBs)<br>聚溴联苯 PBB | 1,000 | N/A |
| 6 | Polybrominated diphenyl ethers (PBDEs)<br>聚溴二苯醚 PBDE | 1,000 | N/A |
| 7 | Di (2-ethylhexyl) phthalate (DEHP)<br>邻苯二甲酸二(2-乙基己基)酯 DEHP | 1,000 | N/A |
| 8 | Butyl benzyl phthalate (BBP)<br>邻苯二甲酸丁苄酯 BBP | 1,000 | N/A |
| 9 | Dibutyl phthalate (DBP)<br>邻苯二甲酸二丁酯 DBP | 1,000 | N/A |
| 10 | Diisobutyl Phthalate (DIBP)<br>邻苯二甲酸二异丁酯 DIBP | 1,000 | N/A |
| 11 | Fluorine (F), Chlorine (Cl), Bromine (Br), Iodine (I)<br>氟(F)、氯(Cl)、溴(Br)、碘(I) | 900, 900, 900, 900<br>Note : Br + Cl < 1,000 | N/A |
| 12 | Heavy metals (Hg, Cd, PB, Cr+6, PBBs and PBDEs) in packing materials<br>包装材料中重金属(汞、镉、六价铬、铅、PBB、PBDE)之总量 | N/A | 100<br>铅(Pb) + 镉(Cd) + 汞(Hg) + 六价铬(Cr+6) <100ppm |
| 13 | (SVHC) Substances of very high concern<br>高度关注物质 | 1,000 | N/A |

FAITH LONG CRYSTAL