TXC CORPORATION

www.txccorp.com

SPECIFICATION FOR APPROVAL

CN: 1803003134

CUSTOMER	:	
PRODUCT TYPE	:	SMD SEAM SEALING X'TAL 3.2×2.5
NOMINAL FREQ.	:	24.000000MHz
TXC P/N	:	AM24000310
REVISION	:	S1
CUSTOMER P/N	:	
PM / SALES	:	
DATE	:	
CUSTOMER CONFIRMATION	:	(Singnature)
		(Date)

(1) TXC requires one copy returned with signature and title of authorized individual that signifies acceptance of the attached specifications.

(2) Orders received and accepted by TXC after return of signed copy of specification will be produced per these specifications.

(3) Any changes to these specifications must be agreed upon by both parties and new revision of the Product Specification Sheet will be issued.

(4) Any issuance of purchase order prior to consigning back the Approval page of "Specification Sheets" from customers will be regarded as the agreement on the contents of these specifications.

MSL:Level 1
RoHS Compliant

TXC confidential and proprietary document

TXC CORPORATION

www.txccorp.com

PRODUCT SPECIFICATION SHEET

CN: 1803003134

PRODUCT TYPE	:	SMD SEAM SEALING X'TAL 3.2×2.5
NOMINAL FREQ.	:	24.000000MHz
TXC P/N	:	AM24000310
REVISION	:	S1

PE/RD	QA	MFG
Wen yuan Chang Wen yuan Chang		
6-Mar-18		

NOTE:

(1) TXC green product standard is based on the international standards. Relevant information is posted on the TXC website and updated regularly. The documentation is subject to the latest green product quality system.

(2) Revision "Sx" is for engineering samples only. PE/RD's approval required.

(3) Revision "Ax" is production ready. PE, QA and MFG's approval required.

MSL:Level 1
RoHS Compliant

TXC confidential and proprietary document

Rev	Revise page	Revise contents	Date	Ref.No.	Reviser
S1	N/A	Initial released	6-Mar-18	N/A	Xiaohua Zhang

TXC confidential and proprietary document

Spec Sheet Contents

No.	Content	Page
1	ELECTRICAL SPECIFICATIONS & Attention	P.3
2	DIMENSIONS	P.4
3	MARKING	P.4
4	FACTORY LOCATION	P.4
5	SUGGESTED REFLOW PROFILE & MANUAL SOLDER CONDITION	P.4
6	STRUCTURE ILLUSTRATION	P.5
7	EMBOSS CARRIER TAPE & REEL	P.6
8	PACKING	P.7
9	RELIABILITY SPECIFICATIONS	P.8

TXC confidential and proprietary document

■ ELECTRICAL SPECIFICATIONS

	Parameters	SYM.	Electrical Spec.				Notes
			MIN	TYPE	MAX	UNITS	
1	Nominal Frequency	FL		24.000000		MHz	-
2	Oscillation Mode	-		Fundamental		-	-
3	Load Capacitance	CL		20		pF	-
4	Frequency Tolerance	-		±10		ppm	at 25 ℃ ± 3 ℃
5	Frequency Stability	-		±70		ppm	Over Operating Temp. Range (Reference 25℃)
6	Operating Temperature	-	-40	~	125	℃	-
7	Aging	-		±3		ppm	1st Year at 25 ℃ ± 3 ℃
8	Drive Level	DL	-	50	100	μW	-
9	Effective Resistance Rr	Rr	-	-	50	Ω	-
10	Shunt Capacitance C0	C0	-	-	2	pF	-
11	Insulation Resistance	-	500	-	-	MΩ	at DC 100V
12	Storage Temperature Range	-	-40	~	125	℃	-

Measure equipment

Electrical characteristics measured by S&A 250B or equivalent.

Unit Weight:

0.018±0.001 g/pcs

■ Attention (注意事項) :

1. If you intend to use product on controls relating to medical equipment, aeronautical equipment, aerospace, military science, space equipment, etc.) please do not fail to advise us of your intention beforehand.
   請勿將本產品使用在醫療,航空,宇航,軍事或與生命安全性相關的設備中，若需使用在上述應用請事前與TXC聯繫。

2. Crystal units will be damaged by ultrasonic welding process due to resonance of crystal wafer itself.
   If ultrasonic welding used, TXC strongly recommend verifying damage by ultrasonic weld.
   本產品在超音波封合的過程中晶片可能會因共振受損，若有超音波封合需求,TXC強烈建議應給予適當的驗證。

TXC confidential and proprietary document

■ DIMENSIONS

(Unit:mm)

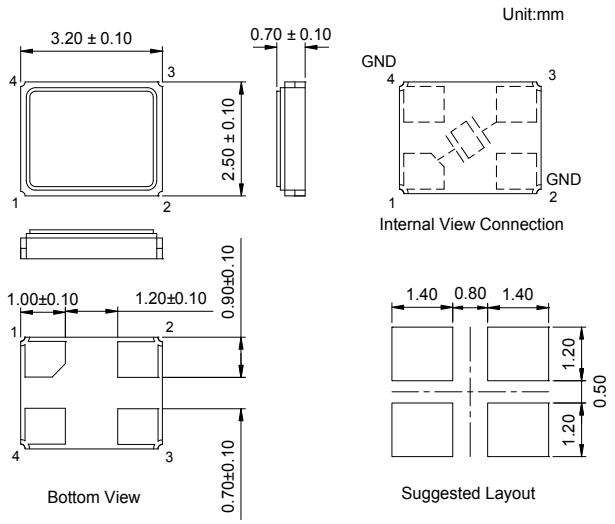

■ MARKING

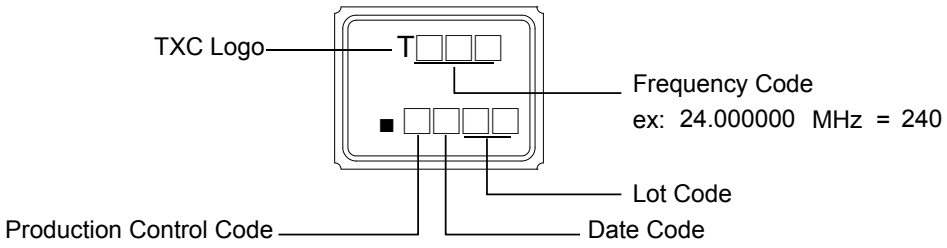

Month Code:

YEAR \ MONTH	JAN	FEB	MAR	APR	MAY	JUN	JUL	AUG	SEP	OCT	NOV	DEC
2005 2009 2013 2017 2021	A	B	C	D	E	F	G	H	J	K	L	M
2006 2010 2014 2018 2022	N	P	Q	R	S	T	U	V	W	X	Y	Z
2007 2011 2015 2019 2023	a	b	c	d	e	f	g	h	j	k	l	m
2008 2012 2016 2020 2024	n	p	q	r	s	t	u	v	w	x	y	z

*This month code will be cycled every four years

Production location: Taiwan & China (Ningbo)

■ SUGGESTED REFLOW PROFILE

Peak Temperature : 260±5℃, 10 sec. Max.

Solder melting point : 220±10 ℃, 60 sec. Min.

Reflow passage time : twice

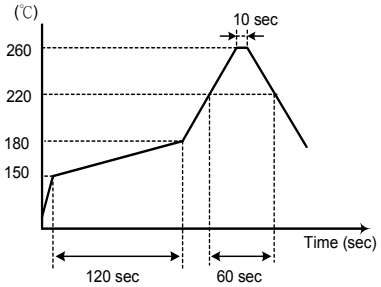

■ SUGGESTED MANUAL SOLDER CONDITION

Pressing a soliding iron of 350 ℃ on the terminal electrode for 4 seconds (twice).

NOTE: After manual welding, the product should be placed at least 2 hours

TXC confidential and proprietary document

■ STRUCTURE ILLUSTRATION

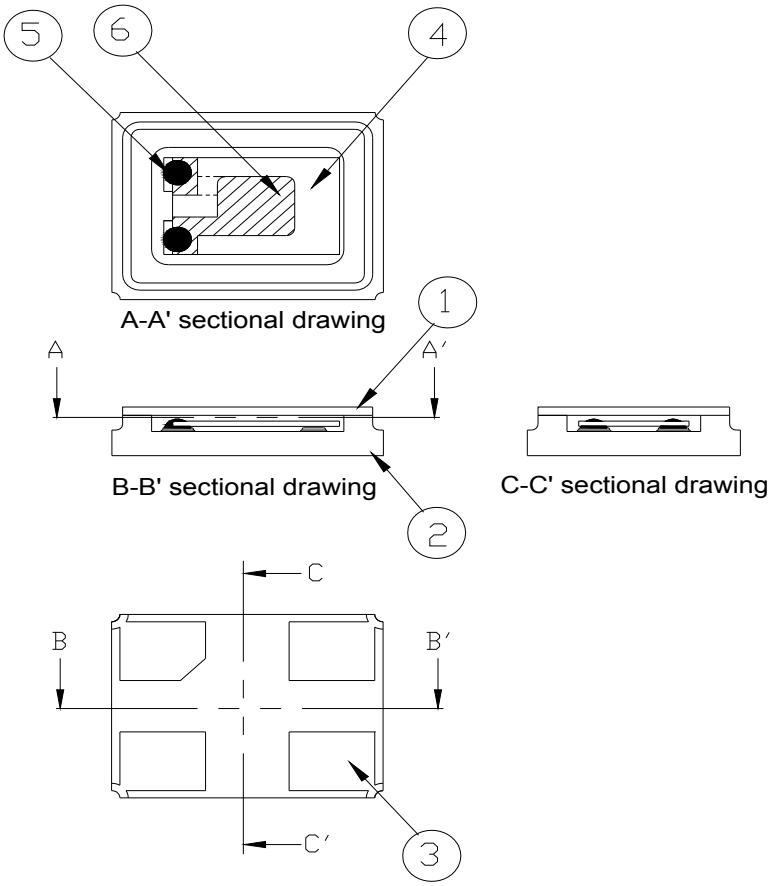

NO	COMPONENTS	MATERIALS	FINISH/SPECIFICATIONS
1	Lid	Kovar (Fe/Co/Ni)	-
2	Package	Ceramic (Al_2O_3) + Kovar (Fe/Co/Ni)+ Ag/Cu	-
3	PAD	Au	Tungsten metalize + Ni plating + Au plating
4	Crystal blank	SiO_2	-
5	Conductive adhesive	Resin+Ag	Silicon resin
6	Electrode	Noble Metal	-

TXC confidential and proprietary document

■ PACKING

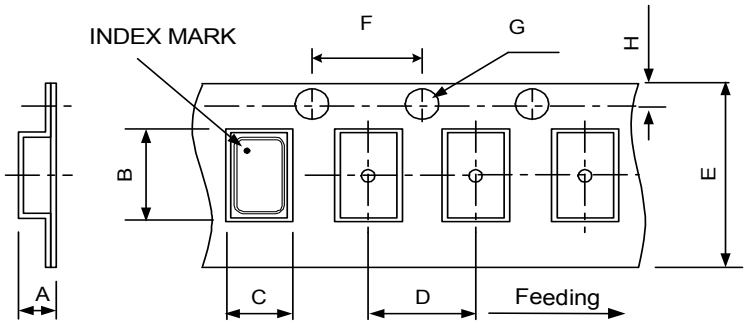

DIMENSIONS	A	B	C	D	E	F	G	H	
	1.65	3.40	2.70	4.00	8.00	4.00	1.50	1.75	(UNIT : mm)

REMARK :

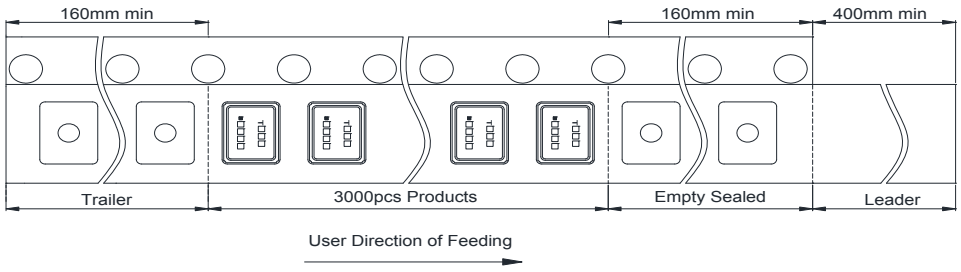

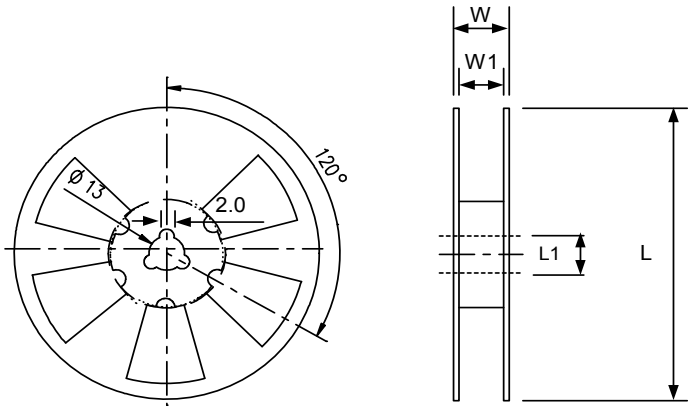

DIMENSIONS	L	L1	W	W1	pcs / Reel (UNIT : mm)
	178.0	13.0	11.5	8.0	Standard Reel Quantity is 3,000 pcs per reel

TXC confidential and proprietary document

■PACKING

Box Item:

1. Reel X 6 (L200 X W200 X H140mm)
2. Reel X 12 (L200 X W200 X H250mm)
3. Reel X 25 (L400 X W400 X H280mm)
4. Reel X 50 (L400 X W400 X H280mm)
5. Reel X 100 (L399 X W346 X H360mm)

Note:
1. For the maximum reel of loads for each type box.
2. The number of reels is slightly adjusted according to each factory.

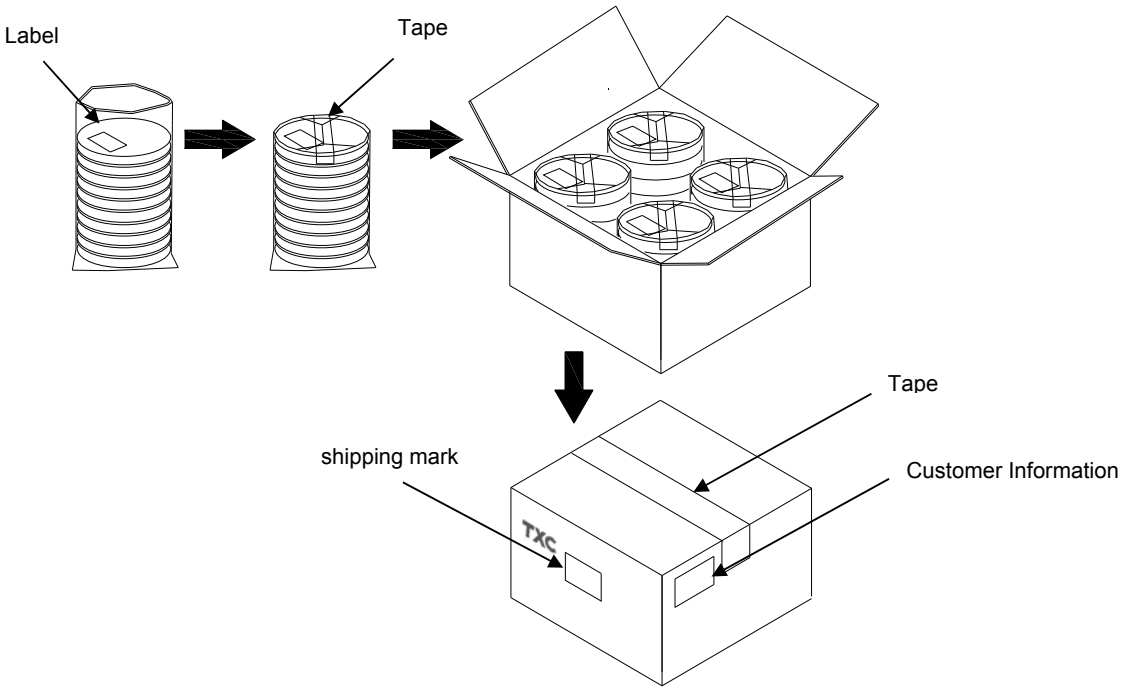

Label ：

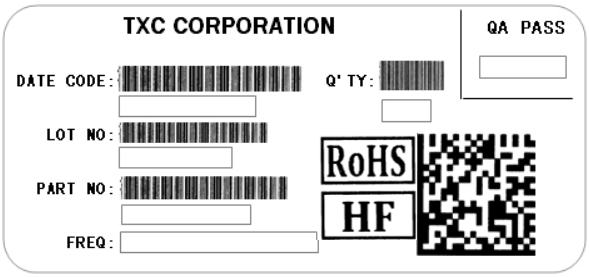

[STORAGE]

1.Do not get wet by the rain.

2.The storage environment shall be 5℃ ~40℃ and 30% ~ 75%RH humidity and avoid exposure to sunlight.

3.If customers have special requirements, we can coordinate.

TXC confidential and proprietary document

■ RELIABILITY SPECIFICATIONS (AEC-Q200 Compliant)

1.Mechanical Endurance

No.	Test Item	Test Methods	REF.DOC
1.1	Drop Test	120 cm height, 10 times on Stainless Plate .	JIS C 6701
1.2	Mechanical Shock	Device are shocked to half sine wave (3000 G) three mutually perpendicular axes each 3 times. 0.3m sec. duration time	MIL-STD-202 Method 213
1.3	Vibration	Frequency range 10 ~ 2000 Hz~10 Hz Amplitude 1.52 mm/10G Sweep time 20 minute Perpendicular axes each test time 4 Hrs (Total test time 12 Hrs)	MIL-STD-202 Method 204
1.4	Solderability	Temperature 245 ℃ ± 5℃ Immersing depth 1.25 mm Immersion time 5 ± 1 seconds Flux Rosin resin methyl alcohol solvent (1 : 4)	J-STD-002
1.5	Terminal Strength	Mount on PCB board and shear strength 1.8kg for 60 sec.	AEC-Q200-006
1.6	Board Flex	Duration Time: 60 sec, Deviation: 3mm	AEC-Q200-005

2.Environmental Endurance

No.	Test Item	Test Methods	REF. DOC
2.1	Resistance To Soldering Heat	Pre-heat temperature 125 ℃ Pre-heat time 60 ~ 120 sec. Test temperature 260 ± 5 ℃ Test time 10 ± 1 sec.	MIL-STD 202 Method 210
2.2	High Temp. Storage	+ 125 ℃ ± 3 ℃ for all 1000 Hrs.	MIL-STD-202 Method 108
2.3	Low Temp. Storage	- 40 ℃ ± 3 ℃ for all 1000 Hrs.	JIS C 6701
2.4	Thermal Shock	Total 1000 cycles of the following Thermal Shock : 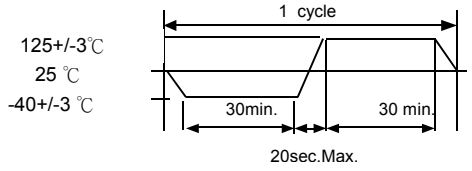	MIL-STD-202 Method 107
2.5	Temperature Cycle	Total 1000 cycles of the following temperature cycle : - 40℃ ± 3 to 125℃ ± 3 , Dwell time:30min.	JESD 22 Method JA-104
2.6	Biased Humidity	+ 85℃ ± 3℃ , RH 85% , 1000 Hrs.	MIL-STD-202 Method 103
2.7	Moisture Resistance	20 cycles (+25℃~65℃ , 80%~100% RH) , 24hrs/cycle.	MIL-STD 202 Method 106
2.8	Operational Life	+ 125 ℃ ± 3 ℃ for 1000 Hrs.	MIL-STD-202 Method 108

TXC confidential and proprietary document