TXC CORPORATION

4F, NO. 16, Sec. 2 Chung Yang S Rd., Peitou, Taipei, Taiwan.

TEL : 886-2-2894-1202 , 886-2-2895-2201 FAX : 886-2-2894-1206 , 886-2-2895-6207 www.txccorp.com

SPECIFICATION FOR APPROVAL

CN: 1402000204

CUSTOMER	:	
PRODUCT TYPE	:	SMD SEAM SEALING X'TAL 3.2×2.5
NOMINAL FREQ.	:	19.687500MHz
TXC P/N	:	AM19600002
REVISION	:	A1
CUSTOMER P/N	:	
PM / SALES	:	
DATE	:	

CUSTOMER SIGNATURE & Date

(1) TXC requires one copy returned with signature and title of authorized individual that signifies acceptance of the attached specifications.

(2) Orders received and accepted by TXC after return of signed copy of specification will be produced per these specifications.

(3) Any changes to these specifications must be agreed upon by both parties and new revision of the Product Specification Sheet will be issued.

(4) Any issuance of purchase order prior to consigning back the Approval page of "Specification Sheets" from customers will be regarded as the agreement on the contents of these specifications.

Attachment: Product Specification Sheet

1

2

3

4

5

RoHS Compliant

TXC CORPORATION

4F, NO. 16, Sec. 2 Chung Yang S Rd., Peitou, Taipei, Taiwan.

TEL : 886-2-2894-1202 , 886-2-2895-2201 FAX : 886-2-2894-1206 , 886-2-2895-6207 www.txccorp.com

PRODUCT SPECIFICATION SHEET

CN: 1402000204

PRODUCT TYPE	:	SMD SEAM SEALING X'TAL 3.2×2.5
NOMINAL FREQ.	:	19.687500MHz
TXC P/N	:	AM19600002
REVISION	:	A1

PE/RD	QA	MFG
Mike Chiu	Alex Huang	Rick Lo
8/23/2013	8/23/13	8/23/2013

NOTE:

(1)Lead Free Products are "Directive 2002/95/EC of The European Parliament of 27 January 2003 on the restriction of the use of certain hazardous substances (RoHS) in electrical and electronic equipment" Compliant (Attachment: SGS Test Report).

(2)Revision "Sx" is for engineering samples only. PE/RD's approval required.

(3)Revision "Ax" is production ready. PE, QA and MFG's approval required

RoHS Compliant

Rev	Revise page	Revise contents	Date	Ref.No.	Reviser
A1	N/A	Initial released	20-Aug-13	N/A	Jane Lee

■ ELECTRICAL SPECIFICATIONS

Standard atmospheric conditions

Unless otherwise specified, the standard range of atmospheric conditions for making measurement and tests are as follow:

Ambient temperature : 25±5℃

Relative humidity : 40%~70%

If there is any doubt about the results, measurement shall be made within the following limits:

Ambient temperature : 25±3℃

Relative humidity : 40%~70%

Measure equipment

Electrical characteristics measured by HP E5100A or equivalent.

Crystal cutting type

The crystal is using AT CUT (thickness shear mode).

Unit Weight:

0.018±0.001 g/pcs

	Parameters	SYM.	Electrical Spec.				Notes
			MIN	TYPE	MAX	UNITS	
1	Nominal Frequency	FL		19.687500		MHz	-
2	Oscillation Mode	-		Fundamental		-	-
3	Load Capacitance	CL		12		pF	-
4	Frequency Tolerance	-		±10		ppm	at 25 ℃ ± 3 ℃
5	Frequency Stability	-		±80		ppm	Over Operating Temp. Range (Reference 25℃)
6	Operating Temperature	-	-40	~	125	℃	-
7	Aging	-		±10		ppm	10 Years
8	Drive Level	DL	-	10	100	μW	-
9	Effective Resistance Rr	Rr	-	-	50	Ω	-
10	Insulation Resistance	-	500	-	-	MΩ	at DC 100V
11	Storage Temperature Range	-	-40	~	125	℃	-

■ DIMENSIONS

(Unit:mm)

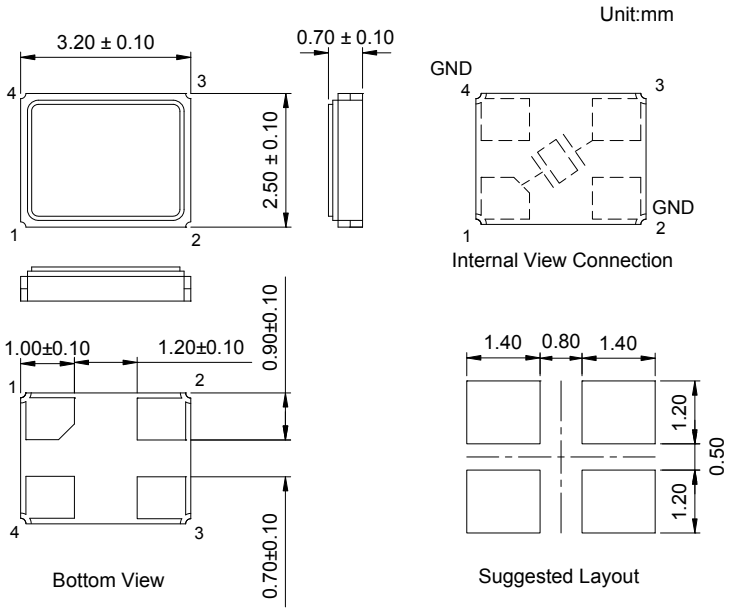

■ MARKING

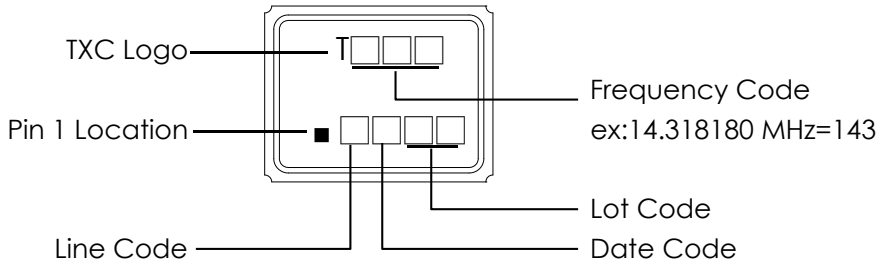

Date Code:

YEAR \ MONTH				JAN	FEB	MAR	APR	MAY	JUN	JUL	AUG	SEP	OCT	NOV	DEC
2005	2009	2013	2017	A	B	C	D	E	F	G	H	J	K	L	M
2006	2010	2014	2018	N	P	Q	R	S	T	U	V	W	X	Y	Z
2007	2011	2015	2019	a	b	c	d	e	f	g	h	j	k	l	m
2008	2012	2016	2020	n	p	q	r	s	t	u	v	w	x	y	z

*This date code will be cycled every four years

Production location:Taiwan

■ SUGGESTED REFLOW PROFILE

Total time : 200 sec. Max.

Solder melting point :220 ℃

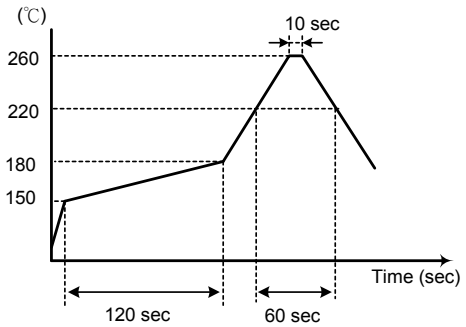

STRUCTURE ILLUSTRATION

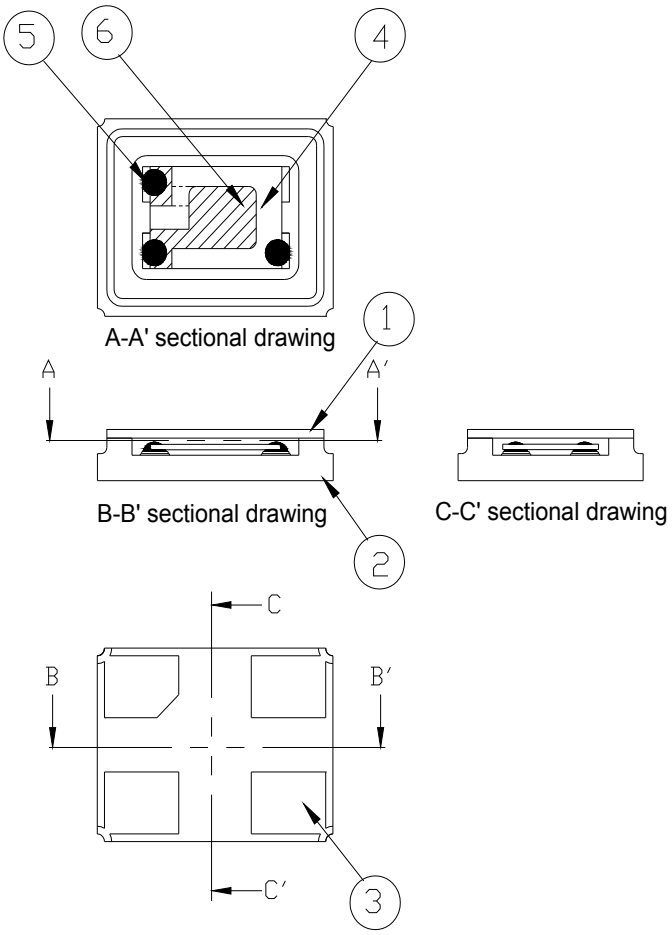

NO	COMPONENTS	MATERIALS	FINISH/SPECIFICATIONS
1	Lid	Kovar (Fe/Co/Ni)	-
2	Base(Package)	Ceramic (Al_2O_3) + Kovar (Fe/Co/Ni)+ Ag/Cu	Color black
3	PAD	Au	Tungsten metalize + Ni plating + Au plating
4	Crystal blank	SiO_2	-
5	Conductive adhesive	Ag	Silicon resin
6	Electrode	Noble Metal	-

■ PACKING

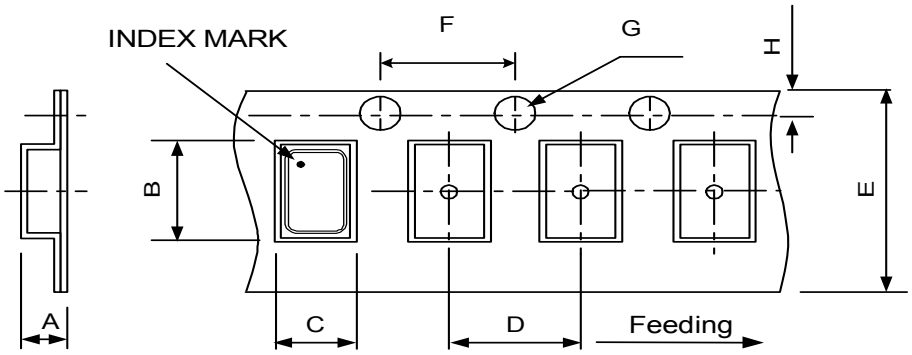

DIMENSIONS	A	B	C	D	E	F	G	H	
	1.65	3.4	2.7	4	8	4	1.5	1.75	(UNIT : mm)

REMARK :

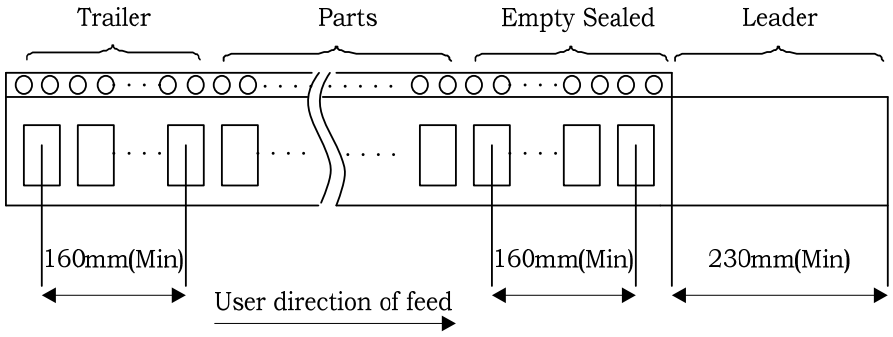

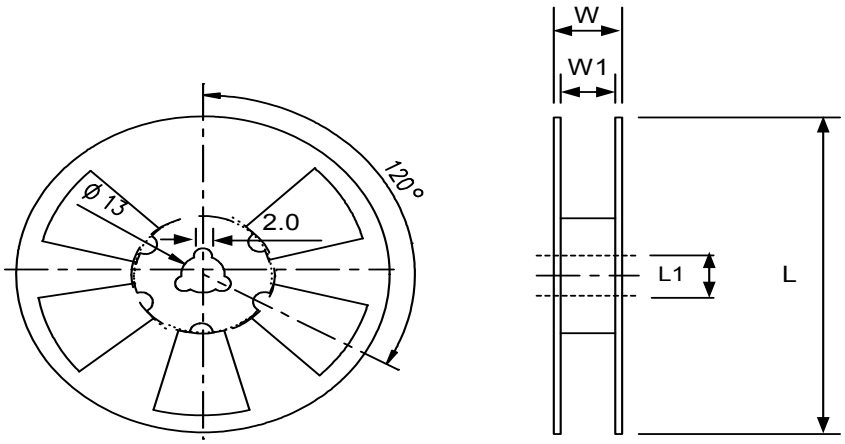

DIMENSIONS	L	L1	W	W1	pcs / Reel (UNIT : mm)
	178	13	11.5	8	Standard Reel Quantity is 3,000 pcs per reel

■ RELIABILITY SPECIFICATIONS (AEC-Q200 Compliant)

1.Mechanical Endurance

No.	Test Item	Test Methods		REF.DOC
1.1	Drop Test	120 cm height, 20 times on Stainless Plate .		JIS C 6701
1.2	Mechanical Shock	Device are shocked to half sine wave (5000 G) three mutually perpendicular axes each 3 times. 0.3m sec. duration time		MIL-STD-202 Method 213
1.3	Vibration	Frequency range Amplitude Sweep time Perpendicular axes each test time	10 ~ 2000 Hz~10 Hz 1.52 mm/20G 20 minute 4 Hrs (Total test time 12 Hrs)	MIL-STD-202 Method 204
1.4	Solderability	Temperature Immersing depth Immersion time Flux	245 ℃ ± 5℃ 1.25 mm 5 ± 1 seconds Rosin resin methyl alcohol solvent (1 : 4)	J-STD-002
1.5	Terminal Strength	Mount on PCB board and shear strength 1.8kg for 60 sec.		AEC-Q200-006
1.6	Board Flex	Duration Time: 60 sec, Deviation: 3mm		AEC-Q200-005

2.Environmental Endurance

No.	Test Item	Test Methods		REF. DOC
2.1	Resistance To Soldering Heat	Pre-heat temperature Pre-heat time Test temperature Test time	125 ℃ 60 ~ 120 sec. 260 ± 5 ℃ 10 ± 1 sec.	MIL-STD 202 Method 210
2.2	High Temp. Storage	+ 125 ℃ ± 3 ℃ for all 1000 Hrs.		MIL-STD-202 Method 108
2.3	Low Temp. Storage	- 40 ℃ ± 3 ℃ for all 1000 Hrs.		JIS C 6701
2.4	Thermal Shock	Total 1000 cycles of the following Thermal Shock : 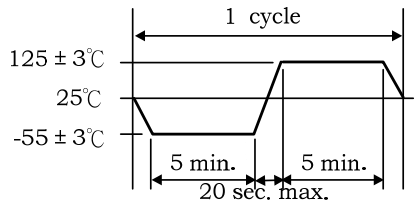 		MIL-STD-202 Method 107
2.5	Temperature Cycle	Total 1000 cycles of the following temperature cycle : - 40℃ ± 3 to 125℃ ± 3 , Dwell time:15min.		JESD 22 Method JA-104
2.6	Biased Humidity	+ 85℃ ± 3℃ , RH 85% , 1000 Hrs.		MIL-STD-202 Method 103
2.7	Moisture Resistance	20 cycles (+25℃~65℃ , 80%~100% RH) , 24hrs/cycle.		MIL-STD 202 Method 106
2.8	Operational Life	+ 125 ℃ ± 3 ℃ for 1000 Hrs.		MIL-STD-202 Method 108