RECIPIENT

SPECIFICATIONS

Product No. : **Q13MC3061000700**

MODEL : **MC-306**

DATE: **May. 9. 2016**

SEIKO EPSON CORPORATION

8548 Naka-minowa
Minowa-machi Kamiina-gun
Nagano-ken
399-4696 Japan

SPECIFICATIONS

1. Application

1) This document is applicable to the crystal unit that are delivered from Seiko Epson Corp.
2) RoHS compliant
   MC-306 contains lead in high melting type solder which is exempted in RoHS directive.
3) This Product supplied (and any technical information furnished, if any) by Seiko Epson Corporation shall not be used for the development and manufacture of weapon of mass destruction or for other military purposes.
   Making available such products and technology to any third party who may use such products or technologies for the said purposes are also prohibited.
4) This product listed here is designed as components or parts for electronics equipment in general consumer use.
   We do not expect that any of these products would be incorporated or otherwise used as a component or part for the equipment, which requires an systems, and medical equipment, the functional purpose of which is to keep extra high reliability, such as satellite, rocket and other space life.

2. Product No. / Model

The product No. of this crystal unit is Q13MC3061000700.
The model is MC-306.

3. Packing

It is subject to the packing standard of Seiko Epson Corp.

4. Warranty

Defective parts which originate with us are replaced free of charge in the case of defects being found with 12 months after delivery.

5. Amendment and/or termination

Amendment and/or termination of this specification is subject to the agreement between the two parties.

6. Contents

Item No.	Item	Page
[1]	Absolute maximum ratings	2
[2]	Operating range	2
[3]	Static characteristics	2
[4]	Environmental and Mechanical characteristics	3
[5]	Dimensions and Marking layout	4 to 5
[6]	Notes	6

[1] Absolute maximum ratings

No.	Item	Symbol	Rating value			Unit	Note
			Min.	Typ.	Max.		
1	Storage temperature range	T_stg	- 55		+ 125	°C	
2	Maximum level of drive	GL		1.0		μW	

[2] Operating range

No.	Item	Symbol	Rating value			Unit	Note
			Min.	Typ.	Max.		
1	Operating temperature range	T_use	- 40		+ 85	°C	
2	Level of drive	DL		0.1		μW	
3	Vibration mode		Fundamental				

[3] Static characteristics

No.	Item		Symbol	Value	Unit	Conditions
1	Nominal Frequency		f_nom	32.768	kHz	
2	Frequency tolerance		f_tol	± 10	$\times 10^{-6}$	CL = 8.2 pF Ta = + 25 ± 3 °C Not include aging
3	Quality factor		Q	5.0Min.	$\times 10^{4}$	Decay method
4	Motional resistance		R1	50 Max.	kΩ	CI meter : Saunders 140B Level of drive : 1.0 μW
5	Motional capacitance		C1	1.8 Typ.	fF	
6	Shunt capacitance		C0	0.9 Typ.	pF	
7	Frequency temperature characteristics	Turnover temperature	Ti	+ 25 ± 5	°C	Values are calculated by The frequencies at + 10, + 25, + 40 °C with C-MOS circuit.
		Parabolic coefficient	B	- 0.04 Max.	$\times 10^{-6}$ /°C^2	
8	Isolation resistance		IR	500 Min.	MΩ	DC 100 V ± 15, 60 seconds Between terminal # 1 and terminal # 4
9	Frequency Aging		f_age	± 3	$\times 10^{-6}$/year	Ta = + 25 °C ± 3 °C

[4] Environmental and mechanical characteristic

(The company evaluation condition We evaluate it by the following examination item and examination condition.)

No.	Items	Value*1*2	Conditions
		$\Delta f/f$ [1×10^{-6}]	
1	Drop	± 5	Free drop from 750 mm height on a hard wooden board for 3 times (Board is thickness more than 30 mm)
2	Vibration resistance	± 3	10 Hz to 55 Hz amplitude 0.75 mm 55 Hz to 500 Hz acceleration 98 m/s^2 10 Hz → 500 Hz → 10 Hz 15 min./cycle 6 h (2 hours , 3 directions)
3	High temperature storage	*3 a) ± 20 *3 b) ± 10	a)+ 125 °C × 1 000 h b) + 85 °C × 1 000 h
4	Low temperature storage	*3 ± 20	- 55 °C × 1 000 h
5	Temperature cycle	*3 ± 20	- 55 °C ⇔ + 125 °C 30 min. at each temp. 100 cycles
6	High temperature and humidity	*3 ± 20	+ 85 °C × 8 5%RH × 1 000 h
7	Soldering heat resistance	± 5	For convention reflow soldering furnace (2 times)
8	Shear	No peeling-off at a soldered part	20 N press the side for 10 ± 1 s Ref. IEC 60068-2-21
9	Pull - off	No peeling-off at a soldered part	10 N press the side for 10 ± 1 s. Ref. IEC 60068-2-21
10	Solvent resistance	The marking shall be legible	Ref. JIS C 0052 or IEC 60068-2-45
11	Solderability	Termination must be 95 % covered with fresh solder	Dip termination into solder bath at + 235 °C ± 5 °C for 3 s (Using Rosin Flux)

< Notes >

1. *1 Each test done independently.
2. *2 Measuring 2 h to 24 h later leaving in room temperature after each test.
3. *3 Pre conditionings
   1. + 125 °C × 24 h to + 85 °C × 85 %RH × 48 h ± 1 h → reflow 2 times
   2. Initial value shall be after 24 h at room temperature.
4. Shift series resistance at after above tests should be less than 60 kΩ

♦ Air-reflow

Pre heating temperature : + 170 °C Pre heating time : 100 s

Heating temperature : + 220 °C Heating time : 35 s

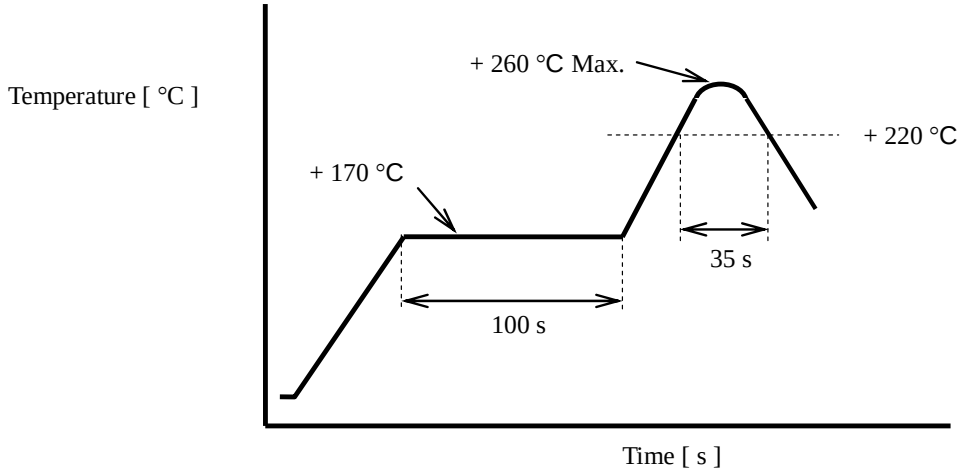

[5] Dimensions and marking layout

1. Dimensions

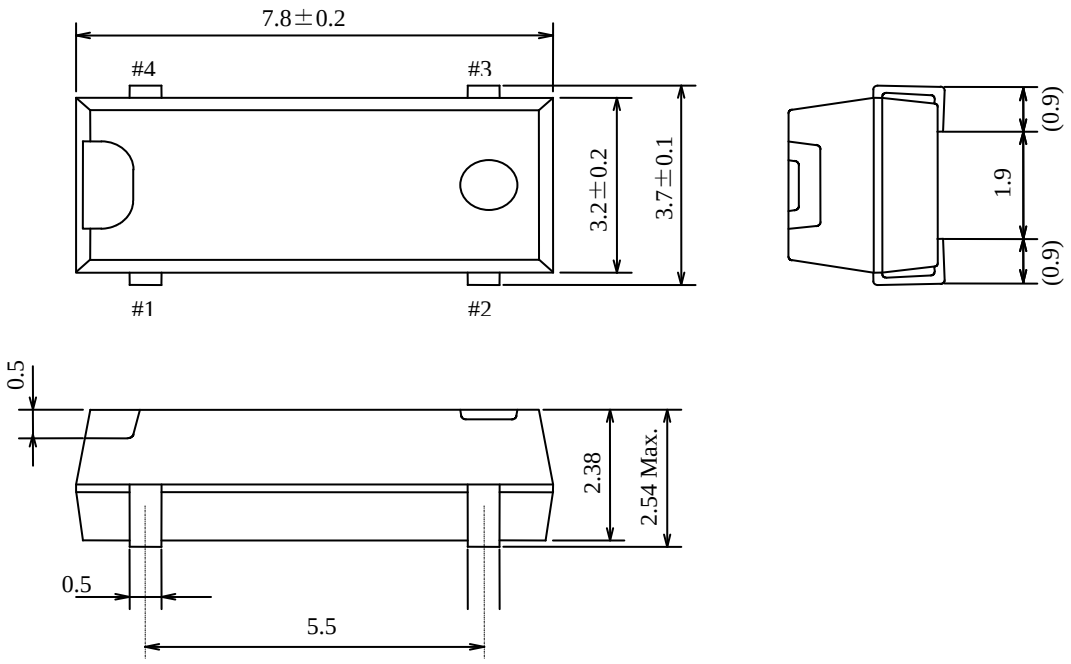

Metal may be exposed on the top or bottom of this product.
This will not affect any quality, reliability or electrical spec.

2. Circuit location

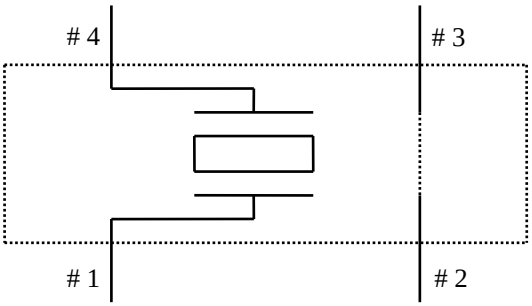

Do not connect # 2 and # 3 terminals to any external terminals.

Type	MC-306	Terminal treatment	Pb Free Solder plate	Unit	1 = 1 mm

3. Recommendable patterning

Unit : 1 = 1 mm

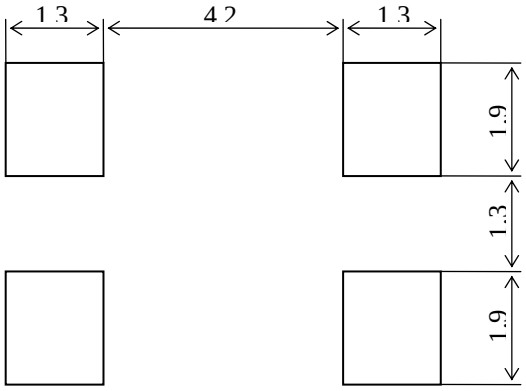

4. Marking layout

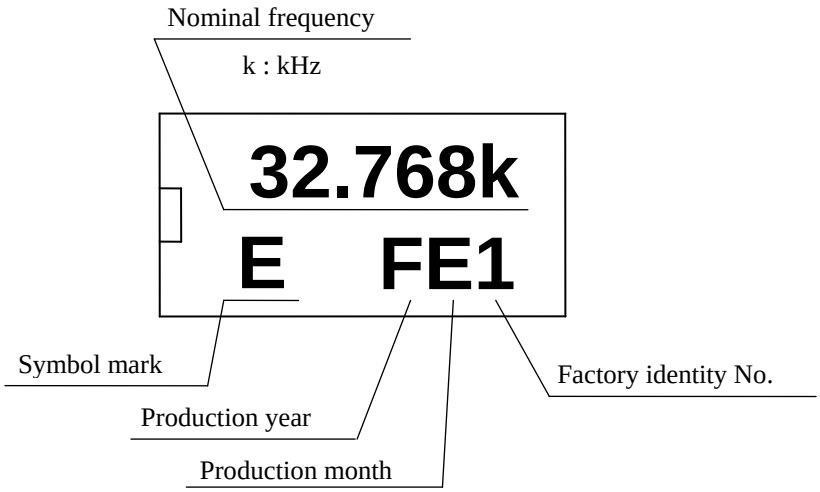

Symbol of Manufacturing year

Year digit		1	2	3	4	5	6	7	8	9	0
Marking	Terminal Plating: Sn-Bi or Sn-Ag	A	B	C	D	E	F	G	H	J	K
Marking	Terminal Plating: Sn	M	N	R	S	T	U	V	W	X	Z

Year digit(1st) of the Production

Symbol of Manufacturing month

Month digit	1	2	3	4	5	6	7	8	9	10	11	12
Marking (Halide free)	A	B	C	D	E	F	G	H	J	K	L	M

- ♦ Nominal frequency is only example.
- ♦ The above marking layout shows only marking contents and their approximate position and it is not for font, size and exact position.

[6] Notes

1. Max two (2) times reflow is allowed. Once miss soldering is happen, hand work soldering by soldering iron is recommended. (+ 350 °C × within 5 sec.)

2. Patterning should be followed by our recommended one.

3. Applying excessive excitation force to the crystal unit may cause deterioration damage.

4. Unless adequate negative resistance is allocated in the oscillation circuit, start up time of oscillation may be increased, or no oscillation may occur.

   How to check the negative resistance.

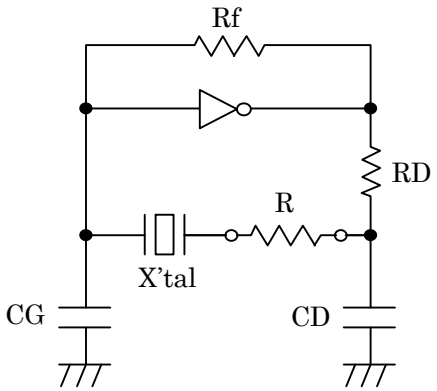

(1) Connect the resistance (R) to the circuit in series with the crystal unit.

(2) Adjust R so that oscillation can start (or stop).

(3) Measure R when oscillation just start (or stop) in above (2).

(4) Get the negative resistance
-R = R + CI value.

(5) Recommended -R
$|-R| > CI \times (5 \sim 10)$

5. The shortest line patterning on board is recommendable.
   Too long line on board may cause of abnormal oscillation.

6. To avoid malfunction, no pattern under or near the X'tal is allowed.
   Solder paste should be more than 150 μm thickness.

7. This device must be stored at the normal temperature and humidity conditions before mounting on a board.

8. Too much exciting shock or vibration may cause deterioration on damage.
   Depending on the condition such as a shock in assembly machinery, the products may be damaged.
   Please check your condition in advance to maintain shock level to be smallest.

9. Depending on the conditions, ultrasonic cleaning cloud cause resonance damage of the internal crystal unit. Since we are unable to determine the usage conditions (type of cleaning unit, power, time, conditions inside the bath, etc.) at our company, we cannot guarantee the safety of this unit when it is cleaned in an ultrasonic cleaner.

10. Ink marking is some kind of solvent may damage marking ink; please take precautions when choosing solvent.

11. Please refer to packing specification regarding how to storage the products in the pack.

TAPING SPECIFICATION
テープ梱包基準書

1. APPLICATION 適用範囲

This document is applicable to MC-306 and MC-30A.
本基準書は、MC-306 / MC-30A のテーピング梱包について規定する。

2. CONTENTS 目次

Item No.	Item	Page
[1]	**Taping specification** テーピング仕様	1 to 2
[2]	**Inner Sleeve** スリーブへの収納	3
[3]	**Shipping carton** 外装箱への収納	
[4]	**Marking** 表示	4
[5]	**Quantity** 収納数量	
[6]	**Storage environment** 保管環境	
[7]	**Handling** リール取扱い	

[1] Taping specification テーピング仕様

Subject to EIA-481 , IEC 60286.
「EIA-481」「IEC 60286」に準拠する。

(1) Tape dimensions TE1608L

Material of the Carrier Tape キャリアテープ材質: PS (Electrically conductive)
Material of the Top Tape トップテープ材質 : PET+PE

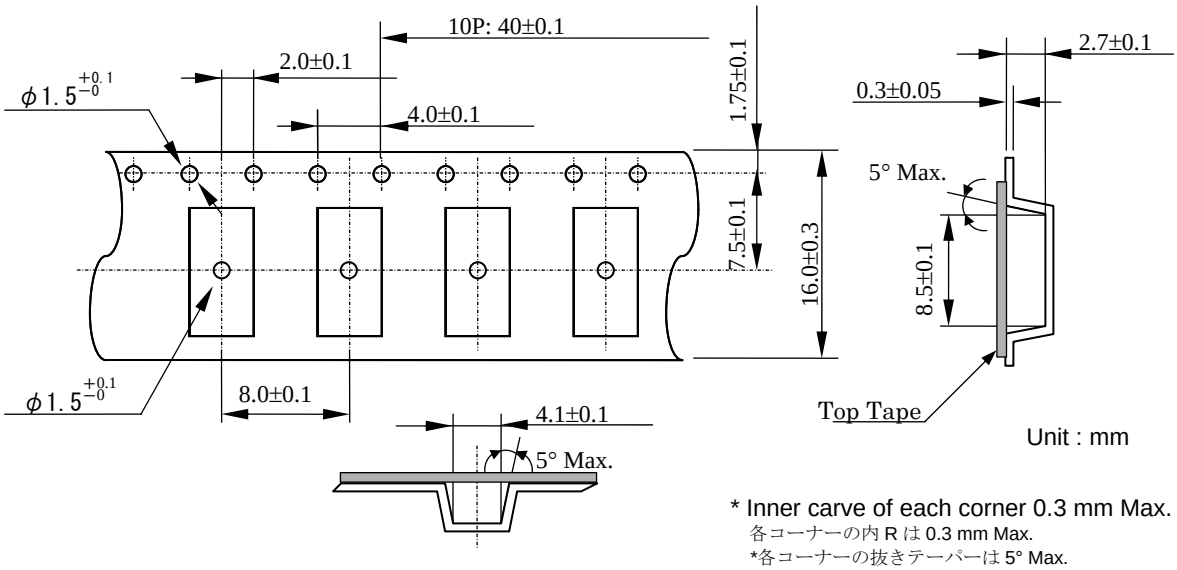

Unit : mm

* Inner carve of each corner 0.3 mm Max.
各コーナーの内 R は 0.3 mm Max.
*各コーナーの抜きテーパーは 5° Max.

(2) Reel dimensions

Material of the Reel リール材質: PS

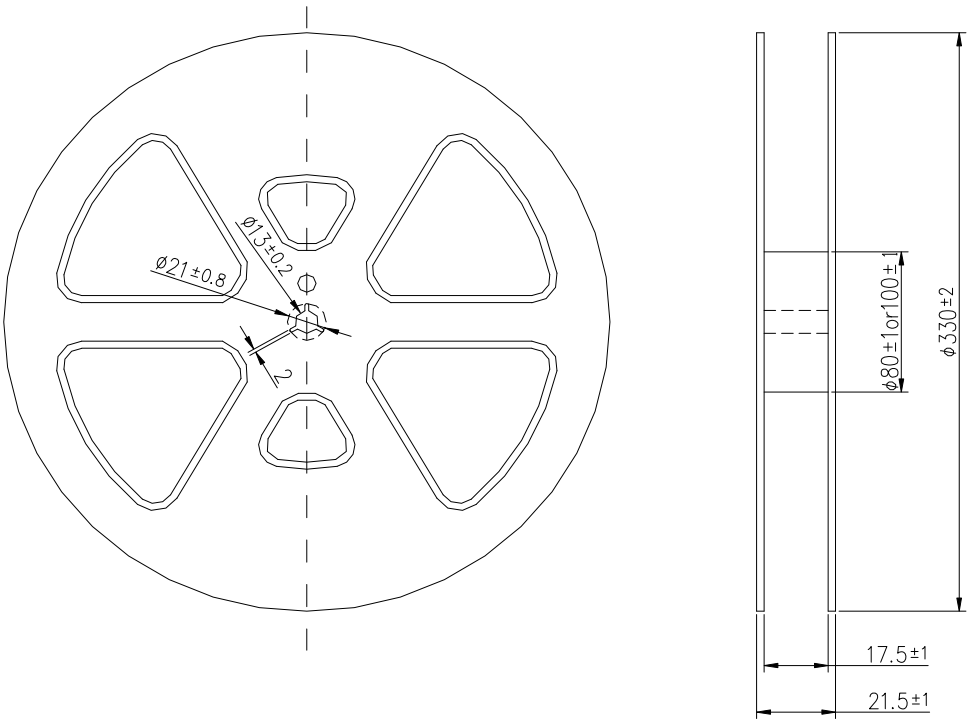

Form and Size of reel window shows are one of the example
リールの窓の形状は代表例を掲載。

(3) Packing 収納形態

(a) Tape & Reel デバイス収納方法

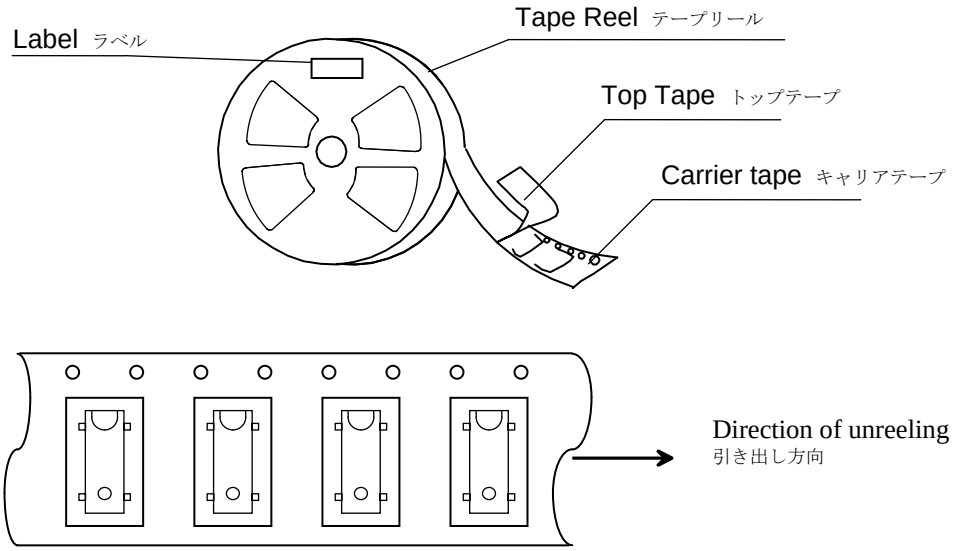

(b) Start & End Point 引き出し先頭側及びリール側の処理

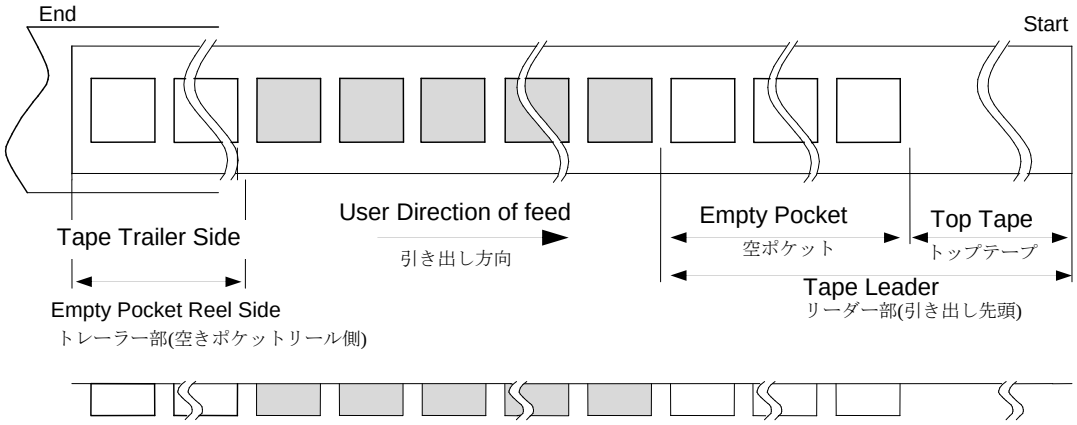

Item		Empty Space 空きスペース	Note 備考
Tape Leader (引き出し先頭側)	Top Tape	Min. 1 000 mm	**Feeding in the Top tape, the tip is fixed with tape.** トップテープ単独で繰り出し、先端はテープにより固定。 **Winding method is a diagram of the above** リールへの巻き取り方法は、上図の通り。
	Carrier Tape	Min. 80 mm	
Tape Trailer (リール側)	Top Tape	Min. 0 mm	**Tip is fixed to the reel.** 先端はリールに固定。
	Carrier Tape	Min. 80 mm	

(4) Peel force of the cover tape トップテープの剥離強度

(a) angle : cover tape during peel off and the direction of unreeling shall be 165° to 180°.
剥離角度:テープの接着面に対し 165～180 度とする。

(b) peel speed : 300 mm/min
剥離速度:300 mm/min とする。

[2] Inner sleeve

a) Packing to antistatic bag 袋への収納

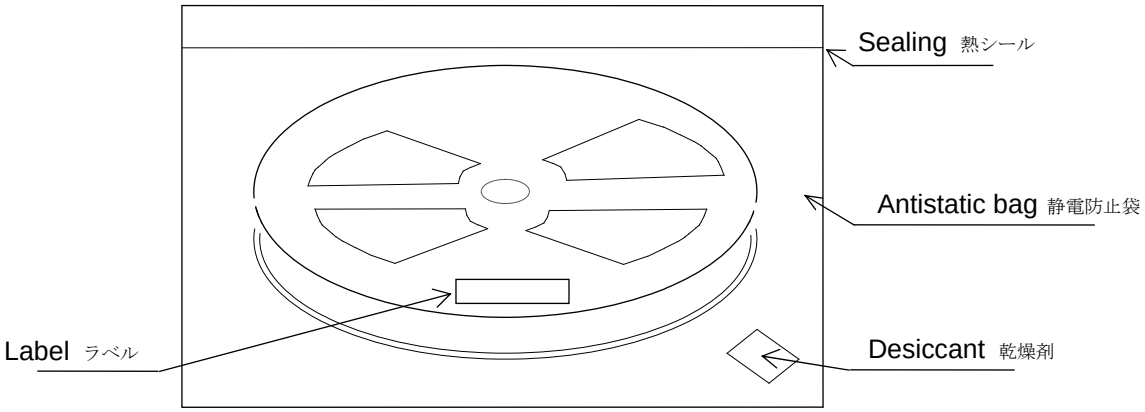

b) Packing to inner sleeve 内装箱への収納

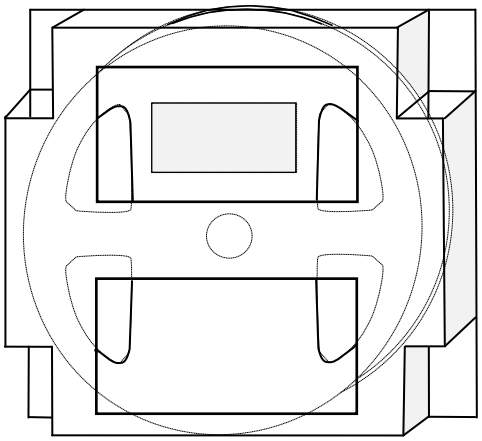

[3] Shipping Carton 外装箱への収納

- Put inner sleeves into an outer box.
  外装箱の中へ、スリーブを収納する。
- If there are room in the outer box, material is put in a shock absorbing together.
  空間ができた時は、クッション材を入れる。

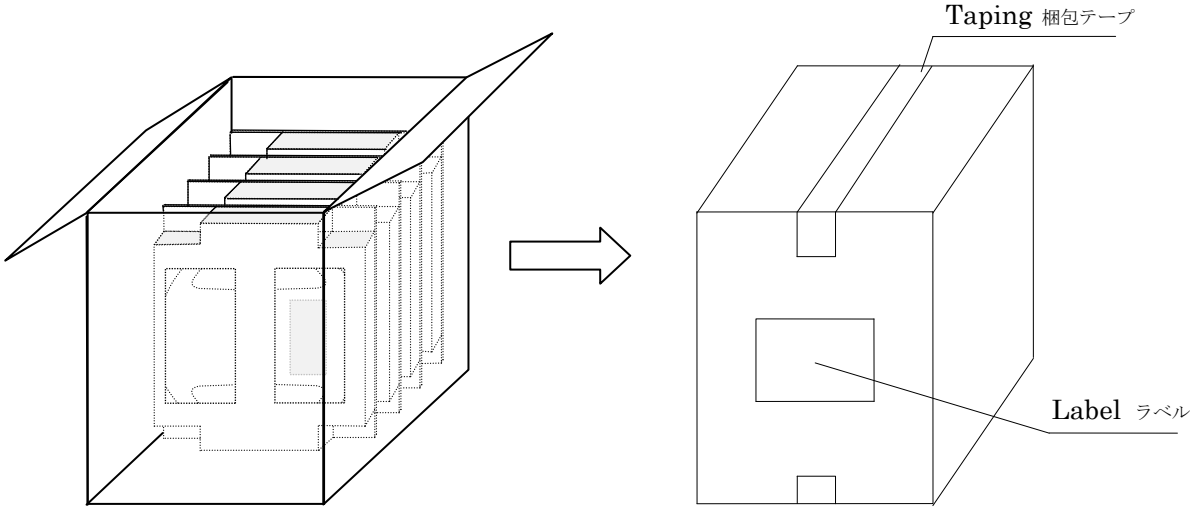

[4] Marking 表示

(1) Reel marking リールへの表示

- Reel marking shall consist of

下記内容をリール表面に表示できるラベルを貼る。:

1) Parts name 製品名称
2) Quantity 製品数量
3) Manufacturing Date or symbol 製品の製造年月又はこれを示す記号
4) Manufacturer's Date or symbol 製品の製造業者又はその略号
5) Others (if necessary) その他必要事項

(2) Shipping carton marking 外装箱への表示

- Shipping carton marking shall consist of :

下記内容を外装箱表面に表示できるラベルを貼る。:

1) Parts name 製品名称
2) Quantity 製品数量

[5] Quantity 収納数量

- 3 000 pcs./reel (Standard)

However it is not the limit, in case that the order quantity does not fill with 3000 pieces.
Packing quantity is defined by 14th and 15th digit of product number.
但し、注文数量が 3 000 pcs に満たない場合は、その限りではない。
収納数量は、製品型番の 14 桁、15 桁による。

14th and 15th digit of product number. 製品型番の 14 桁、15 桁	Quantity
00	3 000 pcs
01	Vinyl Bag(Tape cut)
11	Any Quantity
12	250 pcs
13	250 pcs
14	1 000 pcs
15	2 000 pcs

[6] Storage environment 保管環境

(1) Before open the packing, we recommend to keep less than +30 °C and 85 %RH of Humidity, and to use it less than 6 months after delivery.
開梱前の製品は、温度 +30 °C、湿度 85 %RH 以下での保管をして下さい。
貴社納入後、袋未開封で 6 ヶ月以内の実装を推奨します。

(2) We recommend to open Package in immediately before use. After open Package, We recommend to keeps less than 6 month. No need dry air before soldering work if it is less than temperature +30 °C, 85 humidity %RH.
使用直前まで開梱せず、袋開封後は 6 ヶ月以内の実装を推奨します。
温度 +30 °C、湿度 85 %RH 以下では、はんだ付け作業前に乾燥不要です。

(3) Not to storage with some erosive chemicals.
化学薬品類との同居を避ける。

(4) Nothing is allowed to put on the reel or carton to prevent mechanical damage
内・外装箱がゆがまないようまた、外圧がかからないように保管して下さい。

[7] Handling リール取扱い

To handle with care to prevent the damage of tape, reel and products.
リールの取扱いについては、中のテープ・製品を変形させないようにして下さい。

QC PROCESS FLOW SHEET

CODE : MC-306

Control No : 45-00-03-AKE-1

2015.03.10
MC306_Q_0001

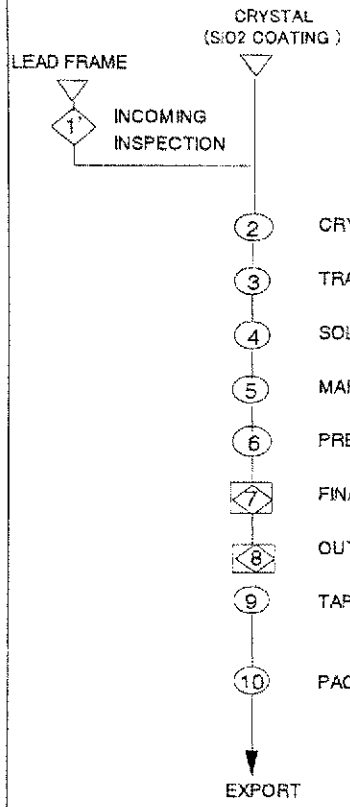

MANUFACTURING PROCESS FLOW CHART	No	RESPONSIBLE SECTION	STANDARD AND SPECIFICATIONS	INSPECTION AND CONTROL ITEMS	INSPECTION METHORD	MEASURING INSTRUMENTS	DATA COLLECTION
	1	SUB-CONTRACTOR	PURCHASE SPECIFICATION	APPEARANCE	SAMPLING	MS SCALE SCOPE	INSPECTION DATA
			INCOMING INSPECTION STD.	DIMENSION			
	2	SUB-CONTRACTOR	MANUFACTURING INSTRUCTION	APPEARANCE	100% INSPECTION	MICROSCOPE	DATA INPUT TO PC
				DIMENSION	SAMPLING	SCALE MICRO	RECORD SHEET
				STRENGTH	SAMPLING	PUSH&PULL GAUGE	RECORD SHEET
	3	SUB-CONTRACTOR	MANUFACTURING INSTRUCTION	APPEARANCE	100% INSPECTION	MICROSCOPE	RECORD SHEET
					SAMPLING	X-RAY	RECORD SHEET
	4	SUB-CONTRACTOR	SOLDER PLATING	S.P THICKNESS	SAMPLING	FLUOROSCOPY	RECORD SHEET
			SPECIFICATION SHEET	APPEARANCE	SAMPLING	VISUAL INSPECTION	RECORD SHEET
	5	SUB-CONTRACTOR	MANUFACTURING INSTRUCTION	APPEARANCE	SAMPLING	VISUAL INSPECTION	RECORD SHEET
	6	SUB-CONTRACTOR	MANUFACTURING INSTRUCTION	APPEARANCE	SAMPLING	MICROSCOPE	RECORD SHEET
				DIMENSION	SAMPLING	INSPECTION JIG	RECORD SHEET
	7	SUB-CONTRACTOR	MANUFACTURING INSTRUCTION	ELECTRICAL CHARACTERISTIC	100% INSPECTION	F0 CHECKING By m/c	RECORD SHEET
	8	SUB-CONTRACTOR	QUALITY STD.	APPEARANCE	SAMPLING	MICROSCOPE	OGI INSP.SHEET
				ELECTRICAL CHARACTERISTIC	SAMPLING	T0&CI CHECKER	OGI INSP.SHEET
				DIMENSION	SAMPLING	INSPECTION JIG	RECORD SHEET
	9	SUB-CONTRACTOR	MANUFACTURING INSTRUCTION	TAPING STRENGTH	SAMPLING	STRENGTH TESTER	RECORD SHEET
	10	SUB-CONTRACTOR	MANUFACTURING INSTRUCTION	EXPORT CUSTOMER LIST			EXPORT DOCUMENTS
			PACKING INSTRUCTION	FREQUENCY			
			THE LIST OF EXPORT DAILY BASE	QUANTITY			

Structure Diagram 構造図

Model 型式	**MC-30x Series**	MC-306 / MC-30A
Document No. 管理№	-	MC30A_D_0001

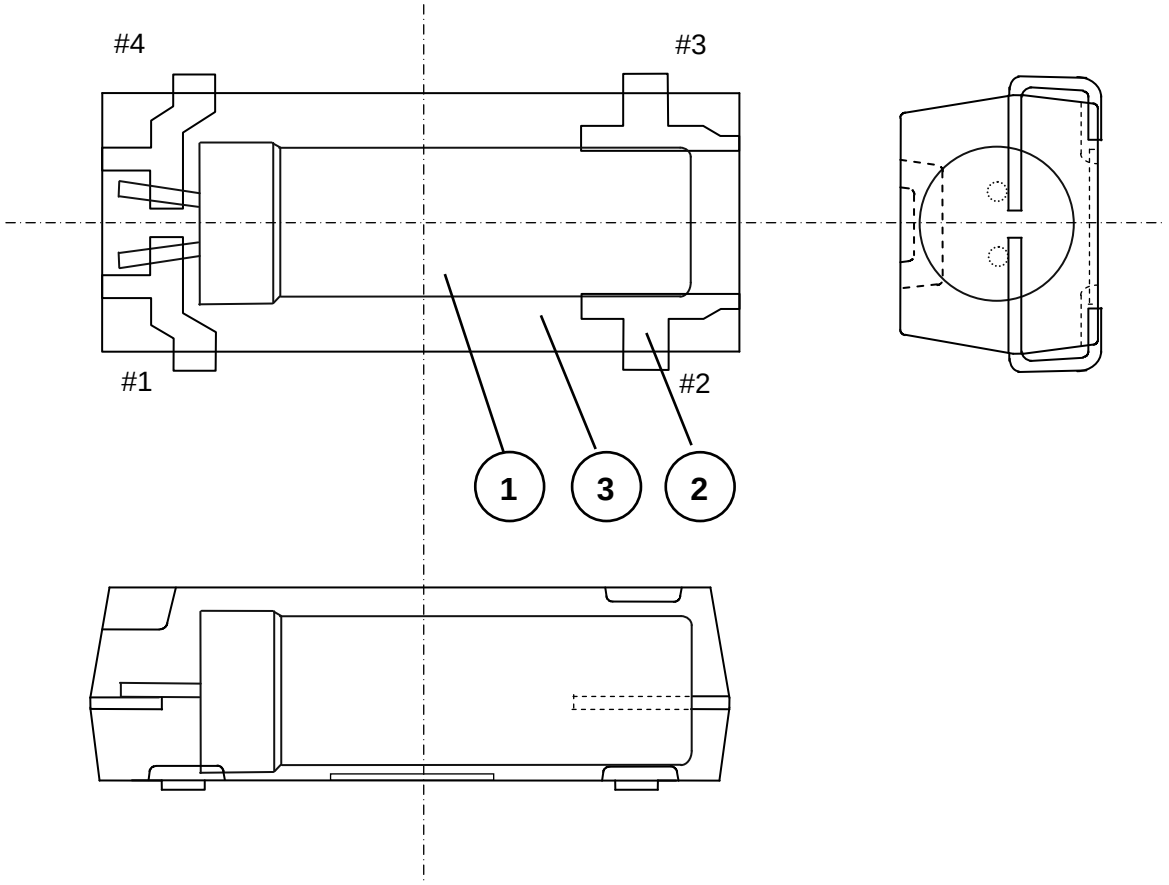

③	Molding モールド	
②	Lead リード端子	
①	Crystal Unit 水晶振動子	
No.	Name of Part 部品名	

RELIABILITY TEST DATA

Product Name : MC-306 (Halide free mold)

The Company evaluation condition

We evaluate environmental and mechanical characteristics by the following test condition . **No.F-45-0001-02-007EH**

No.	ITEM	TEST CONDITIONS	VALUE *1 *2 Δ f / f [1 × 10^{-6}]	TEST Qty [n]	FAIL Qty [n]
1	Drop	Free drop from 750 mm height on a hard wooden board for 3 times (Board is thickness more than 30 mm)	± 5	22	0
2	Vibration	10 Hz to 55 Hz amplitude 0.75 mm 55 Hz to 500 Hz acceleration 98 m/s^2 10 Hz → 500 Hz → 10 Hz 15 min / cycle 6 h (2 h × 3 directions)	± 3	22	0
3	High temperature storage	a) +125℃ × 1 000 h b) +85 ℃ × 1 000 h	*3 a) ± 20 *3 b) ± 10	a) 22 b) 22	a) 0 b) 0
4	Low temperature storage	-55 ℃ × 1 000 h	*3 ± 20	22	0
5	Temperature cycle	-55 ℃ ⇔ +125 ℃ 30 min at each temp. 100 cycles	*3 ± 20	22	0
6	Temperature humidity storage	+85 ℃ × 85 %RH × 1 000 h	*3 ± 20	22	0
7	Resistance to soldering heat	For convention reflow soldering furnace (2 times)	± 5	22	0
8	Shear	20 N press for 10 ± 1 s Ref. IEC 60068-2-21	No peeling - off at a solder part	11	0
9	Pull - off	10 N press for 10 ± 1 s Ref. IEC 60068-2-21	No peeling - off at a solder part	11	0
10	Solvent resistance	Ref. JIS C 0052 or IEC 60068-2-45	The marking shall be legible	11	0
11	Solderability	Dip termination into solder bath at +235 ℃ ± 5 ℃ for 3 s (Using Rosin Flux)	Termination must be 95 % covered with fresh solder	11	0

Notes

1. *1 Each test done independently.
2. *2 Measuring 2 h to 24 h later leaving in room temperature after each test.
3. *3 Pre conditionings Initial value shall be after 24 h at room temperature.
4. Shift series resistance at before above tests should be less than 60 kΩ.

Product Name : MC-306 (Halide free mold)

Δ f / f

No.F-45-0001-02-008EH

1. Drop
750 mm 、 3 times

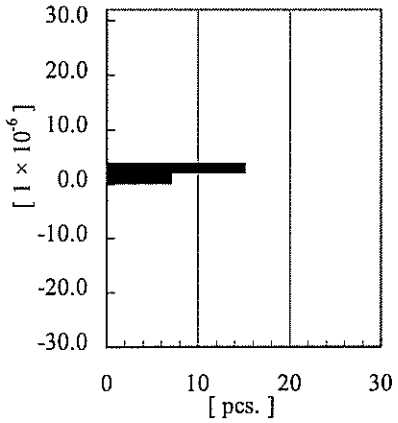

2. Vibration
10 Hz to 55 Hz amplitude 0.75 mm
55 Hz to 500 Hz acceleration 98 m/s²
15 min/cycle 6 h(2 h 、 3 directions)

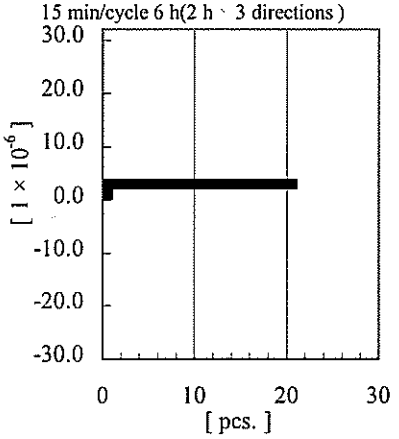

3. High temp. storage
a) +125 ℃ × 1 000 h

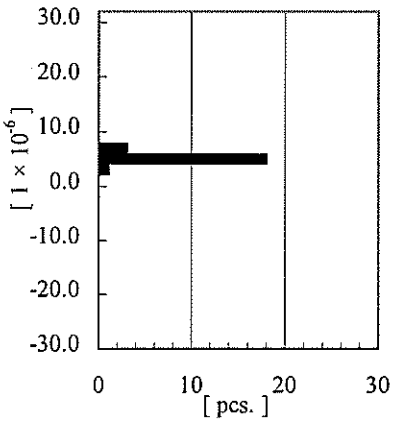

3. High temp. storage
b) +85 ℃ × 1 000 h

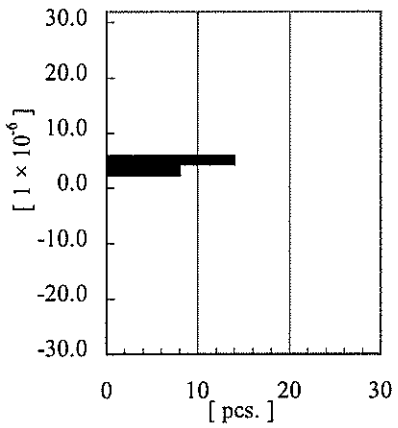

4. Low temp. storage
-55 ℃ × 1 000 h

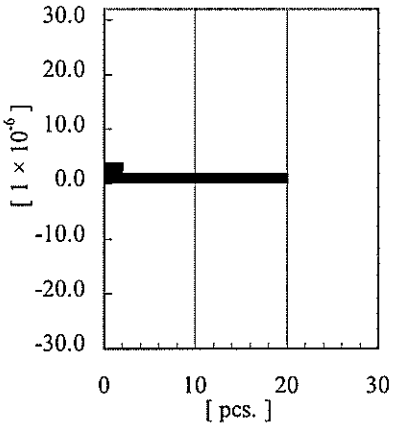

5. Temp. cycle
-55 ℃ ⇔ +125 ℃
100 cycles

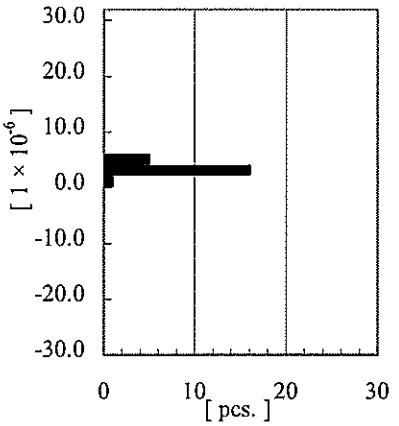

6. Temp. humidity storage
+85 ℃ × 85 %RH × 1 000 h

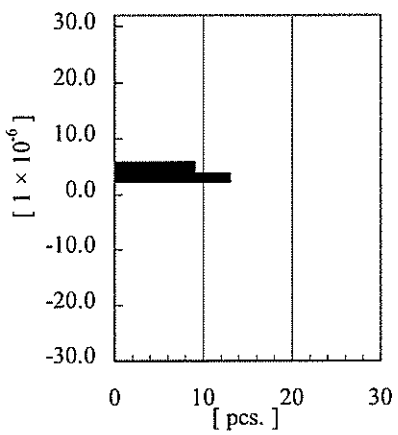

7. Resistance to soldering heat (Reflow 2 times)

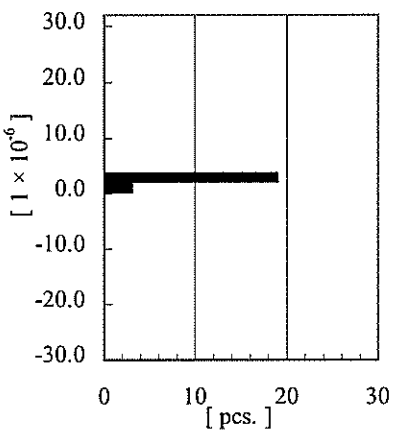

Qualification Data

Product Name : MC-306 (Halide free mold)

CI

No.F-45-0001-02-009EH

1. Drop
750 mm、3 times

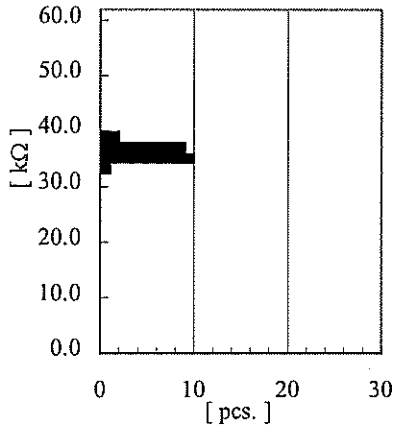

2. Vibration
10 Hz to 55 Hz amplitude 0.75 mm
55 Hz to 500 Hz acceleration 98 m/s^2
15 min/cycle 6 h (2 h、3 directions)

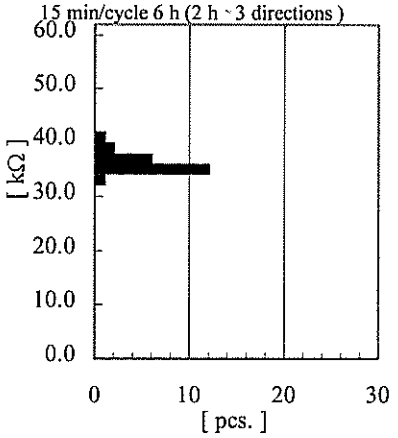

3. High temp. storage
a) +125 ℃ × 1 000 h

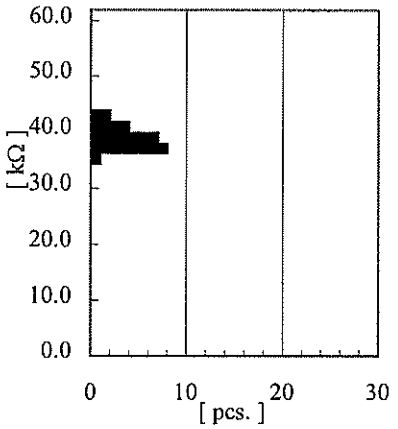

3. High temp. storage
b) +85 ℃ × 1 000 h

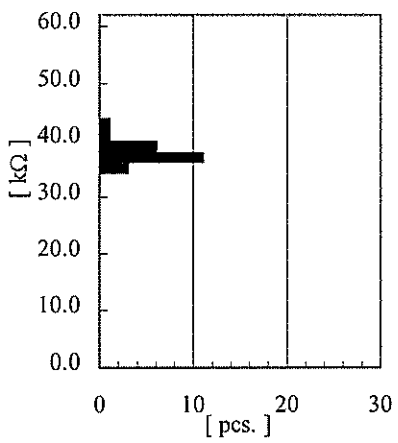

4. Low temp. storage
-55 ℃ × 1 000 h

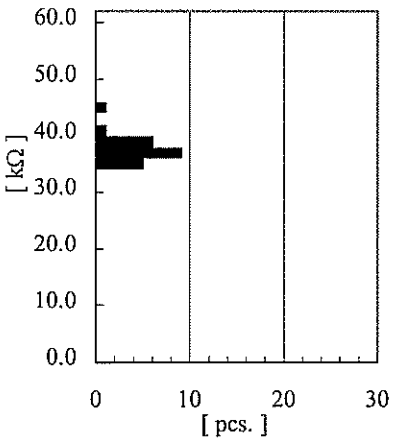

5. Temp. cycle
-55 ℃ ⇔ +125 ℃
100 cycles

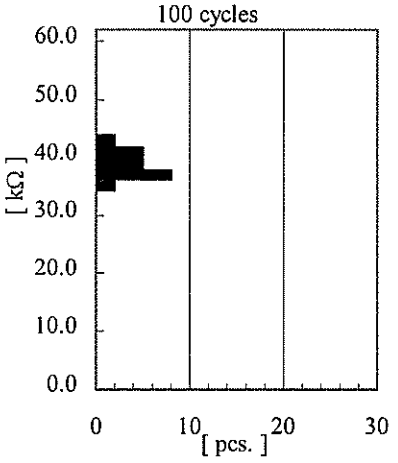

6. Temp. humidity storage
+85 ℃ × 85 %RH × 1 000 h

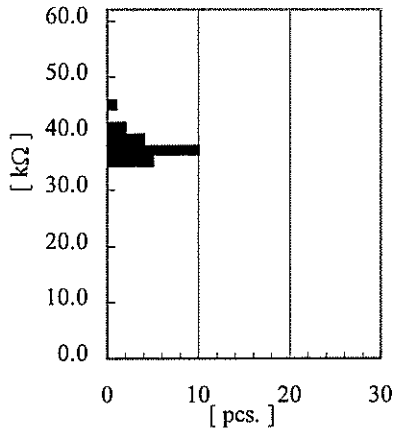

7. Resistance to soldering heat (Reflow 2 times)

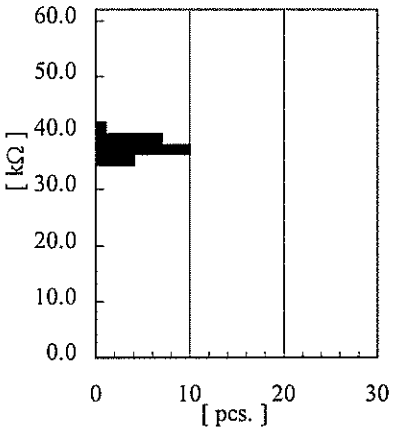

Qualification Data