RECIPIENT

SPECIFICATIONS

Halide free

MODEL : **MC-306**

32.768 kHz 6 pF ±10

SPEC. No. : **Q09-237-9B**

DATE: **Jan. 13. 2010**

EPSON TOYOCOM CORPORATION

QZ Business Unit

8548 Naka-minowa

Minowa-machi Kamiina-gun

Nagano-ken

399-4696 Japan

CHECKED Mamoru Ikegami / Manager of Production Management

CHECKED Kazunori Kiwada / Assistant Manager of Production Management

CHECKED Yasushi Hiraizumi / Manager of Quality Assurance

PREPARED Toshio Yanagisawa / Assistant Manager of Quality Assurance

SPECIFICATIONS

1. Application

1) This document is applicable to the crystal unit that are delivered
to . from Epson Toyocom Corp.

2) RoHS compliant
MC-306 contains lead in high melting type solder which is exempted in RoHS directive.

3) This Product supplied (and any technical information furnished, if any) by Epson Toyocom Corporation shall not be used for the development and manufacture of weapon of mass destruction or for other military purposes. Making available such products and technology to any third party who may use such products or technologies for the said purposes are also prohibited.

4) This product listed here is designed as components or parts for electronics equipment in general consumer use. We do not expect that any of these products would be incorporated or otherwise used as a component or part for the equipment, which requires an systems, and medical equipment, the functional purpose of which is to keep extra high reliability, such as satellite, rocket and other space life.

2. Model

The model is MC-306.

3. Packing

It is subject to the packing standard of Epson Toyocom Corp.

4. Warranty

Defective parts which originate with us are replaced free of charge in the case of defects being found with 12 months after delivery.

5. Amendment and/or termination

Amendment and/or termination of this specification is subject to the agreement between the two parties.

6. Contents

Item No.	Item	Page
[1]	Absolute maximum ratings	2
[2]	Operating range	2
[3]	Static characteristics	2
[4]	Environmental and Mechanical characteristics	3
[5]	Dimensions and Marking layout	4 to 5
[6]	Notes	6

[1] Absolute maximum ratings

No.	Item	Symbol	Rating value			Unit	Note
			Min.	Typ.	Max.		
1	Storage temperature range	T_stg	- 55		+ 125	°C	
2	Maximum level of drive	GL		1.0		μW	

[2] Operating range

No.	Item	Symbol	Rating value			Unit	Note
			Min.	Typ.	Max.		
1	Operating temperature range	T_use	- 40		+ 85	°C	
2	Level of drive	DL		0.1		μW	
3	Vibration mode		Fundamental				

[3] Static characteristics

No.	Item		Symbol	Value	Unit	Conditions
1	Nominal Frequency		f_nom	32.768	kHz	
2	Frequency tolerance		f_tol	± 10	$\times 10^{-6}$	CL = 6 pF Ta = + 25 ± 3 °C Not include aging
3	Quality factor		Q	5.0Min.	$\times 10^{4}$	Decay method
4	Motional resistance		R1	50 Max.	kΩ	CI meter : Saunders 140B Level of drive : 1.0 μW
5	Motional capacitance		C1	1.8 Typ.	fF	
6	Shunt capacitance		C0	0.9 Typ.	pF	
7	Frequency temperature characteristics	Turnover temperature	Ti	+ 25 ± 5	°C	Values are calculated by The frequencies at + 10, + 25, + 40 °C with C-MOS circuit.
		Parabolic coefficient	B	- 0.04 Max.	$\times 10^{-6}/°C^{2}$	
8	Isolation resistance		IR	500 Min.	MΩ	DC 100 V ± 15, 60 seconds Between terminal # 1 and terminal # 2
9	Frequency Aging		f_age	± 3	$\times 10^{-6}$/year	Ta = + 25 °C ± 3 °C

[4] Environmental and mechanical characteristic

(The company evaluation condition We evaluate it by the following examination item and examination condition.)

No.	Items	Value*1*2	Conditions
		Δ f/f [1 × 10^{-6}]	
1	Drop	± 5	Free drop from 750 mm height on a hard wooden board for 3 times (Board is thickness more than 30 mm)
2	Vibration resistance	± 3	10 Hz to 55 Hz amplitude 0.75 mm 55 Hz to 500 Hz acceleration 98 m/s^2 10 Hz → 500 Hz → 10 Hz 15 min./cycle 6 h (2 hours , 3 directions)
3	High temperature storage	*3 a) ± 20 *3 b) ± 10	a)+ 125 °C × 1 000 h b) + 85 °C × 1 000 h
4	Low temperature storage	*3 ± 20	- 55 °C × 1 000 h
5	Temperature cycle	*3 ± 20	- 55 °C ⇔ + 125 °C 30 min. at each temp. 100 cycles
6	High temperature and humidity	*3 ± 20	+ 85 °C × 8 5%RH × 1 000 h
7	Soldering heat resistance	± 5	For convention reflow soldering furnace (2 times)
8	Shear	No peeling-off at a soldered part	20 N press the side for 10 ± 1 s Ref. IEC 60068-2-21
9	Pull - off	No peeling-off at a soldered part	10 N press the side for 10 ± 1 s. Ref. IEC 60068-2-21
10	Solvent resistance	The marking shall be legible	Ref. JIS C 0052 or IEC 60068-2-45
11	Solderability	Termination must be 95 % covered with fresh solder	Dip termination into solder bath at + 235 °C ± 5 °C for 3 s (Using Rosin Flux)

< Notes >

1. *1 Each test done independently.
2. *2 Measuring 2 h to 24 h later leaving in room temperature after each test.
3. *3 Pre conditionings
   1. + 125 °C × 24 h to + 85 °C × 85 %RH × 48 h ± 1 h → reflow 2 times
   2. Initial value shall be after 24 h at room temperature.
4. Shift series resistance at after above tests should be less than 60 kΩ

♦ Air-reflow

Pre heating temperature : + 170 °C Pre heating time : 100 s

Heating temperature : + 220 °C Heating time : 35 s

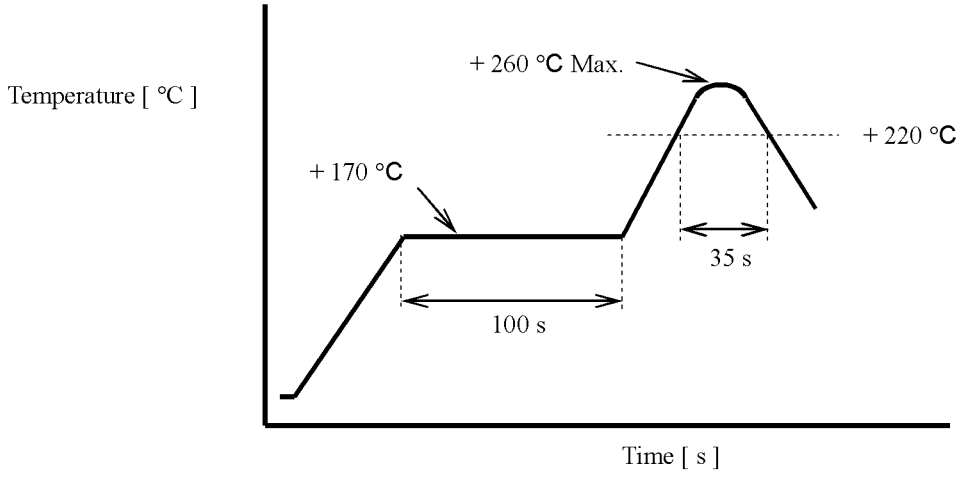

[5] Dimensions and marking layout

1. Dimensions

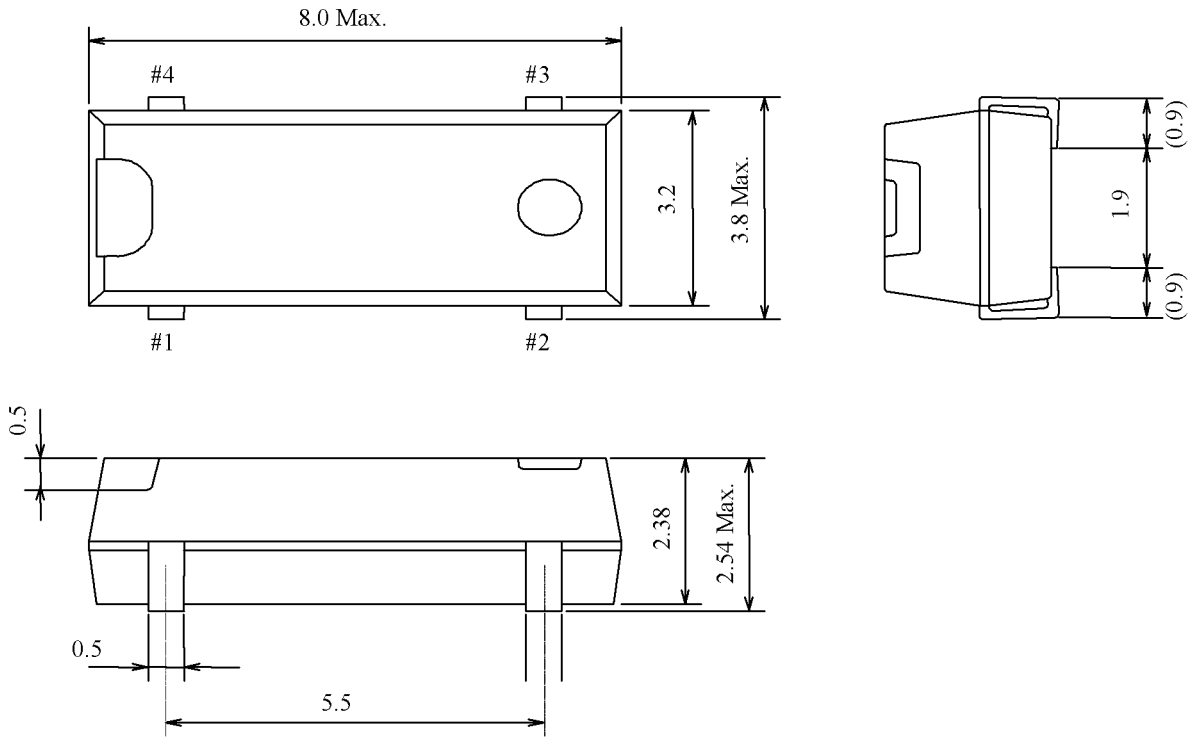

Metal may be exposed on the top or bottom of this product.
This will not affect any quality, reliability or electrical spec.

2. Circuit location

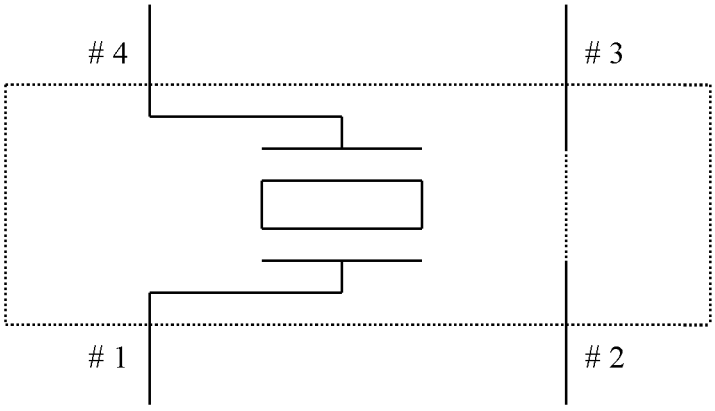

Do not connect # 2 and # 3 terminals to any external terminals.

Type	MC-306	Terminal treatment	Pb Free Solder plate	Unit	1 = 1 mm

3. Recommendable patterning

Unit : 1 = 1 mm

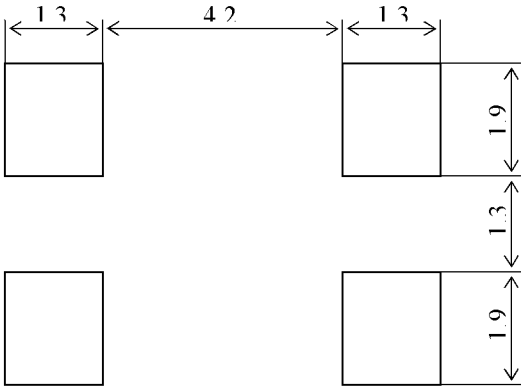

4. Marking layout

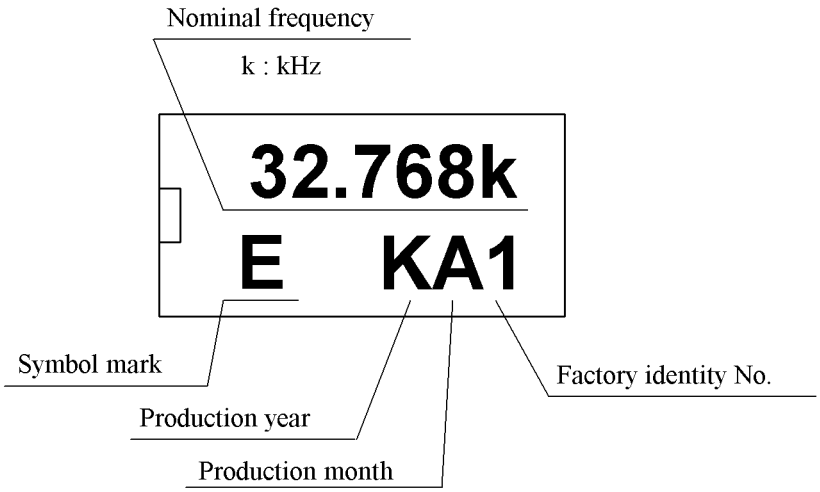

Symbol of Manufacturing year

Year digit	1	2	3	4	5	6	7	8	9	0
Marking	A	B	C	D	E	F	G	H	J	K

Year digit(1st) of the Production

Symbol of Manufacturing month

Month digit	1	2	3	4	5	6	7	8	9	10	11	12
Marking (Halide free)	A	B	C	D	E	F	G	H	J	K	L	M

- ♦ Nominal frequency is only example.
- ♦ The above marking layout shows only marking contents and their approximate position and it is not for font, size and exact position.

[6] Notes

1. Max two (2) times reflow is allowed. Once miss soldering is happen, hand work soldering by soldering iron is recommended. (+ 350 °C × within 5 sec.)

2. Patterning should be followed by our recommended one.

3. Applying excessive excitation force to the crystal unit may cause deterioration damage.

4. Unless adequate negative resistance is allocated in the oscillation circuit, start up time of oscillation may be increased, or no oscillation may occur.

   How to check the negative resistance.

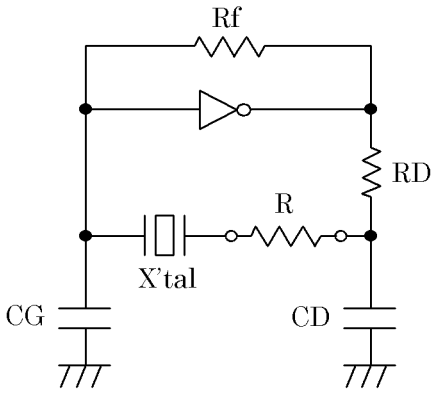

(1) Connect the resistance (R) to the circuit in series with the crystal unit.

(2) Adjust R so that oscillation can start (or stop).

(3) Measure R when oscillation just start (or stop) in above (2).

(4) Get the negative resistance
$-R = R + CI$ value.

(5) Recommended -R
$|-R| > CI \times (5 \sim 10)$

5. The shortest line patterning on board is recommendable.
   Too long line on board may cause of abnormal oscillation.

6. To avoid malfunction, no pattern under or near the X'tal is allowed.
   Solder paste should be more than 150 μm thickness.

7. This device must be stored at the normal temperature and humidity conditions before mounting on a board.

8. Too much exciting shock or vibration may cause deterioration on damage.
   Depending on the condition such as a shock in assembly machinery, the products may be damaged.
   Please check your condition in advance to maintain shock level to be smallest.

9. Depending on the conditions, ultrasonic cleaning cloud cause resonance damage of the internal crystal unit. Since we are unable to determine the usage conditions (type of cleaning unit, power, time, conditions inside the bath, etc.) at our company, we cannot guarantee the safety of this unit when it is cleaned in an ultrasonic cleaner.

10. Ink marking is some kind of solvent may damage marking ink; please take precautions when choosing solvent.

11. Please refer to packing specification regarding how to storage the products in the pack.

TAPING SPECIFICATION

1. APPLICATION

This document is applicable to MC-306 and MC-30A.

2. CONTENTS

Item No.	Item	Page
[1]	Taping specification	1 to 2
[2]	Inner carton	3
[3]	Shipping carton	
[4]	Marking	4
[5]	Quantity	
[6]	Storage environment	
[7]	Handling	

[1] Taping specification

Subject to EIA-481 , EIAJ EDX7602 , IEC 60286 , and JIS C0806.

(1) Tape dimensions TE1608L

Material of the Carrier Tape : PS

Material of the Top Tape : PET+PE

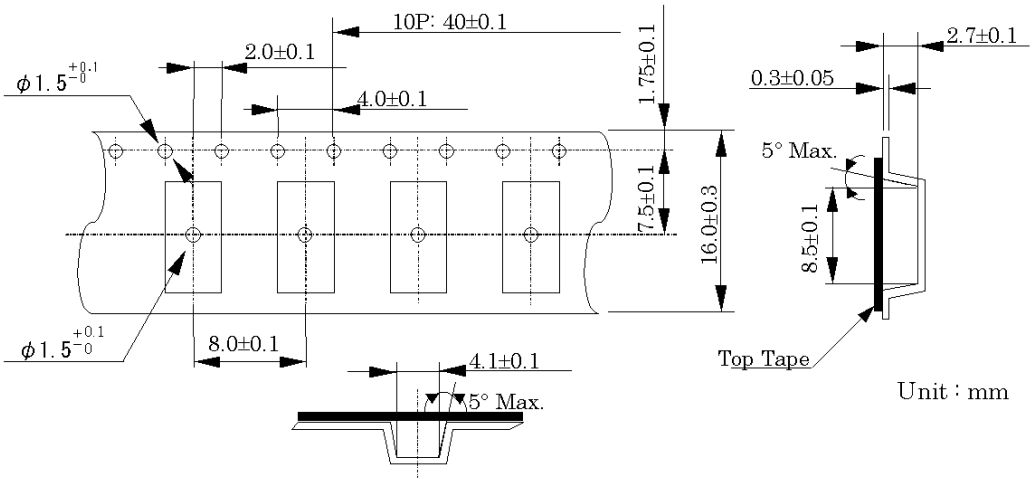

Unit : mm

(2) Reel dimensions

Material of the Reel : PS

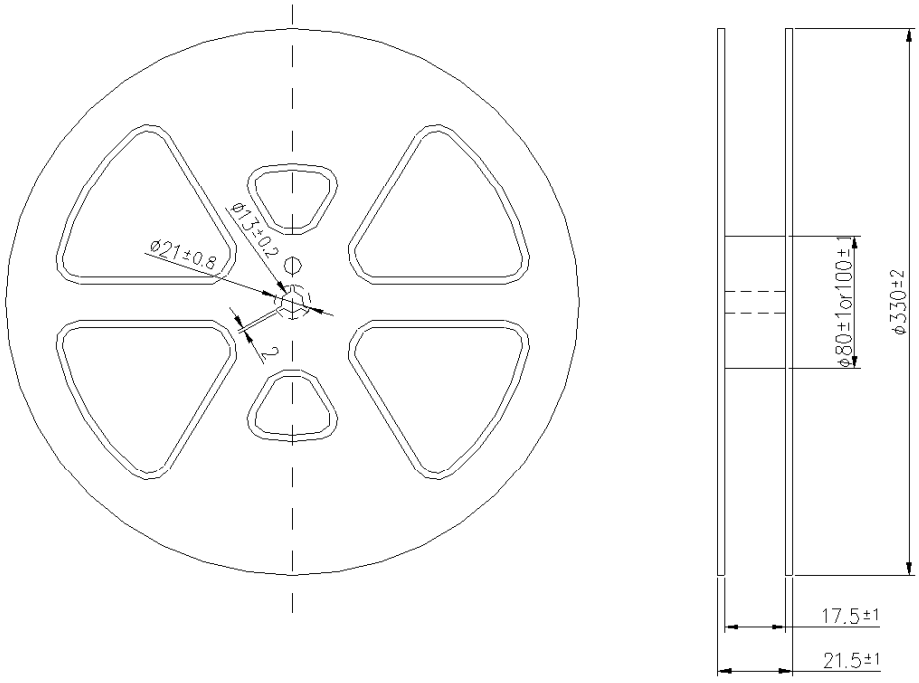

Form and Size of reel window shows are one of the example

(3) Packing

(a) Tape & Reel

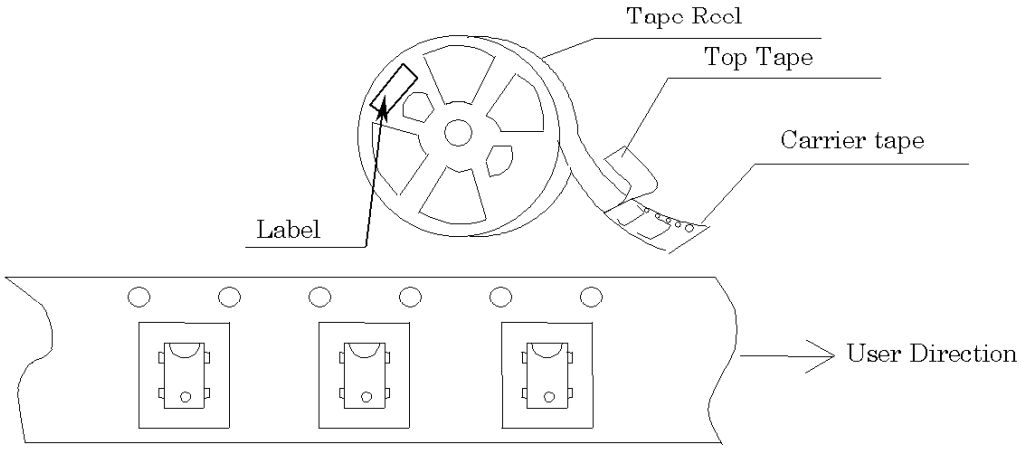

(b) Start & End Point

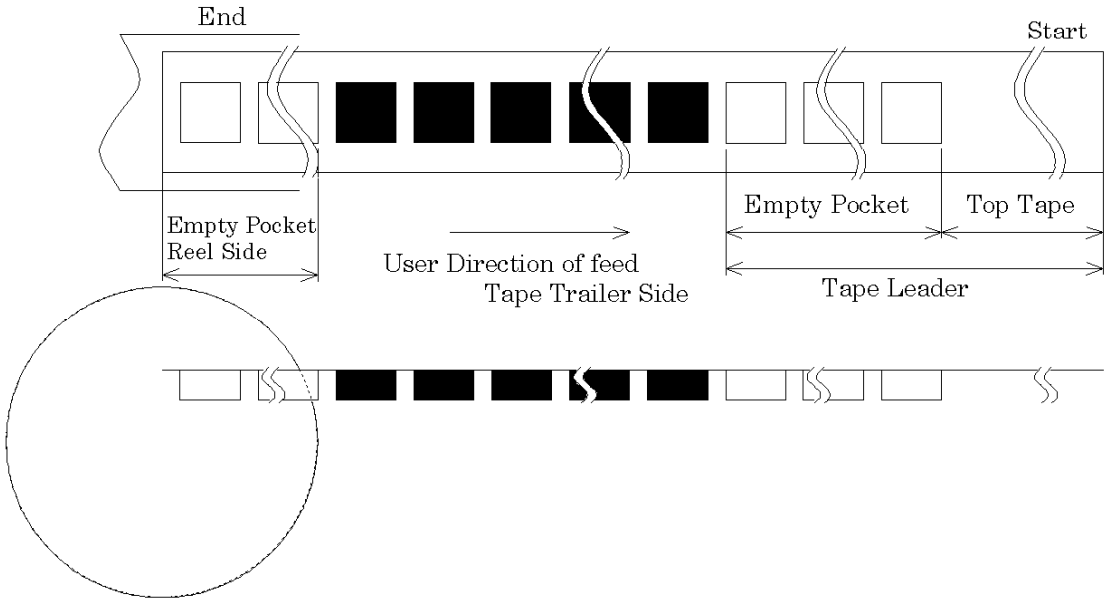

(c) Peel force of the cover tape

(1) angle : cover tape during peel off and the direction of unreeling shall be 165° to 180°.

(2) peel speed :5 mm/s.

Item		Empty Space
Tape Leader	Top Tape	Min. 1 000 mm
	Carrier Tape	Min. 10 pockets
Tape Trailer	Top Tape	Min. 0 mm
	Carrier Tape	Min. 10 pockets

[2] Inner Carton

a) Packing to antistatic bag

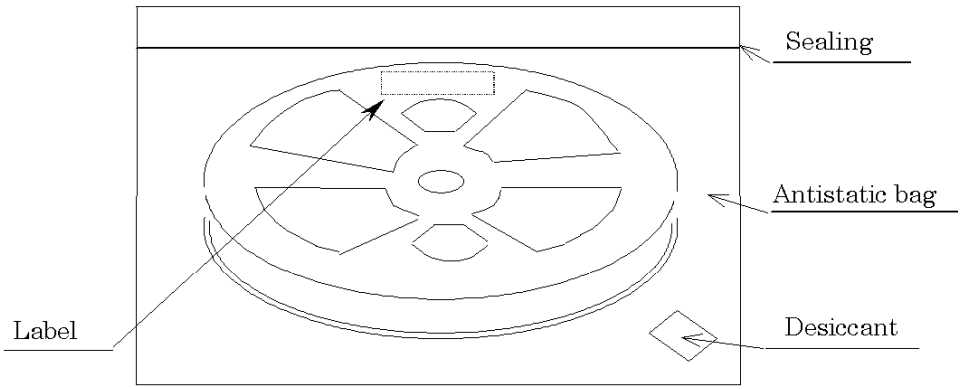

b) Packing to inner carton

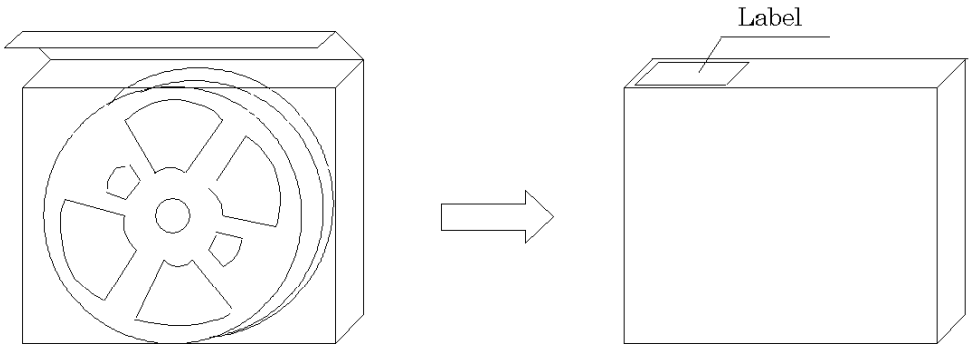

[3] Shipping Carton

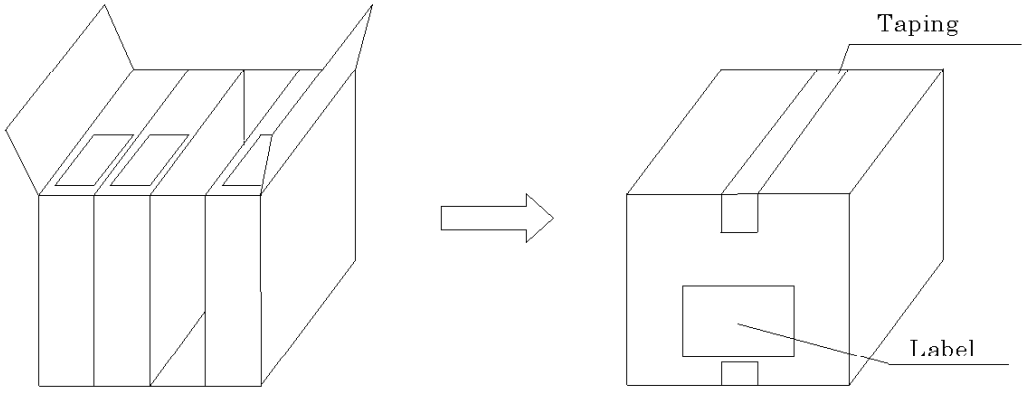

[4] Marking

(1) Reel marking

- Reel marking shall consist of :

1) Parts name
2) Quantity
3) Manufacturing Date or symbol
4) Manufacturer's Date or symbol
5) Others (if necessary)

(2) Inner carton marking

- Same as Reel marking.

(3) Shipping carton marking

- Shipping carton marking shall consist of :

1) Parts name
2) Quantity

[5] Quantity

- 3 000 pcs./reel

[6] Storage environment

(1) To storage the reel at 15 °C to 35 °C , 25 %RH to 85 %RH of Humidity.
(2) To open the packing just before using.
(3) Not to expose the sun.
(4) Not to storage with some erosive chemicals.
(5) Nothing is allowed to put on the reel or carton to prevent mechanical damage.

[7] Handling

To handle with care to prevent the damage of tape, reel and products.

QC PROCESS FLOW SHEET

CODE : MC-306

Control No : 45-00-03-ANE-1

26-Apr-00

EPSON TOYOCOM CORP.
INA PLANT QZ BU

PREPARED	CHECKED	APPROVED
M. Nagai	M. Nagai	S. Watanabe

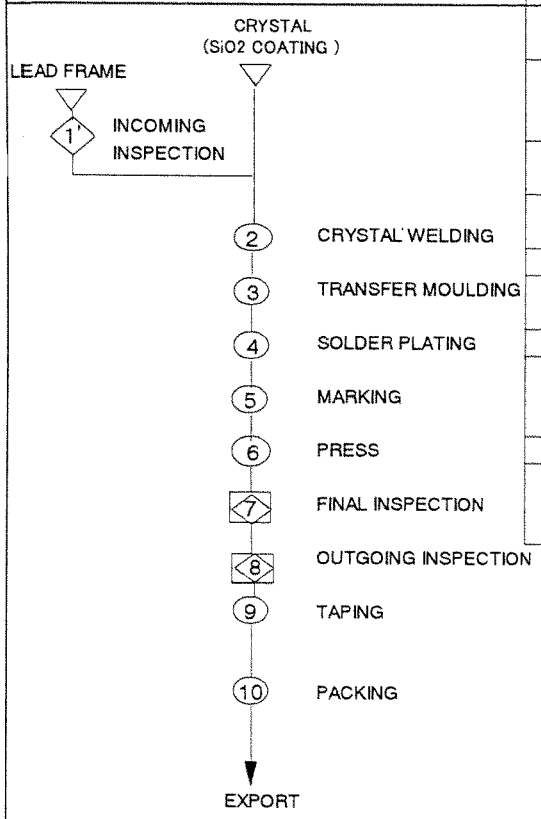

MANUFACTURING PROCESS FLOW CHART	No	RESPONSIBLE SECTION	STANDARD AND SPECIFICATIONS	INSPECTION AND CONTROL ITEMS	INSPECTION METHORD	MEASURING INSTRUMENTS	DATA COLLECTION
	1'	SUB-CONTRACTOR	PURCHASE SPECIFICATION	APPEARANCE	SAMPLING	MS SCALE SCOPE	INSPECTION DATA
			INCOMING INSPECTION STD.	DIMENSION			
	2	SUB-CONTRACTOR	MANUFACTURING INSTRUCTION	APPEARANCE	100% INSPECTION	MICROSCOPE	DATA INPUT TO PC
				DIMENSION	SAMPLING	SCALE MICRO	RECORD SHEET
				STRENGTH	SAMPLING	PUSH&PULL GAUGE	RECORD SHEET
	3	SUB-CONTRACTOR	MANUFACTURING INSTRUCTION	APPEARANCE	100% INSPECTION	MICROSCOPE	RECORD SHEET
					SAMPLING	X-RAY	RECORD SHEET
	4	SUB-CONTRACTOR	SOLDER PLATING	S.P THICKNESS	SAMPLING	FLUOROSCOPY	RECORD SHEET
			SPECIFICATION SHEET	APPEARANCE	SAMPLING	VISUAL INSPECTION	RECORD SHEET
	5	SUB-CONTRACTOR	MANUFACTURING INSTRUCTION	APPEARANCE	SAMPLING	VISUAL INSPECTION	RECORD SHEET
	6	SUB-CONTRACTOR	MANUFACTURING INSTRUCTION	APPEARANCE	SAMPLING	MICROSCOPE	RECORD SHEET
				DIMENSION	SAMPLING	INSPECTION JIG	RECORD SHEET
	7	SUB-CONTRACTOR	MANUFACTURING INSTRUCTION	ELECTRICAL CHARACTERISTIC	100% INSPECTION	Fo CHECKING By m/c	RECORD SHEET
	8	SUB-CONTRACTOR	QUALITY STD.	APPEARANCE	SAMPLING	MICROSCOPE	OGI INSP.SHEET
				ELECTRICAL CHARACTERISTIC	SAMPLING	To&Cl CHECKER	OGI INSP.SHEET
				DIMENSION	SAMPLING	INSPECTION JIG	RECORD SHEET
	9	SUB-CONTRACTOR	MANUFACTURING INSTRUCTION	TAPING STRENGTH	SAMPLING	STRENGTH TESTER	RECORD SHEET
	10	SUB-CONTRACTOR	MANUFACTURING INSTRUCTION	EXPORT CUSTOMER LIST			EXPORT DOCUMENTS
			PACKING INSTRUCTION	FREQUENCY			
			THE LIST OF EXPORT DAILY BASE	QUANTITY			

QC PROCESS FLOW SHEET

CODE : MC-306

Control No : 45-00-03-AKE-1

26-Apr-00

EPSON TOYOCOM CORP.
INA PLANT QZ BU

PREPARED	CHECKED	APPROVED
M. Nagai	M. Nagai	

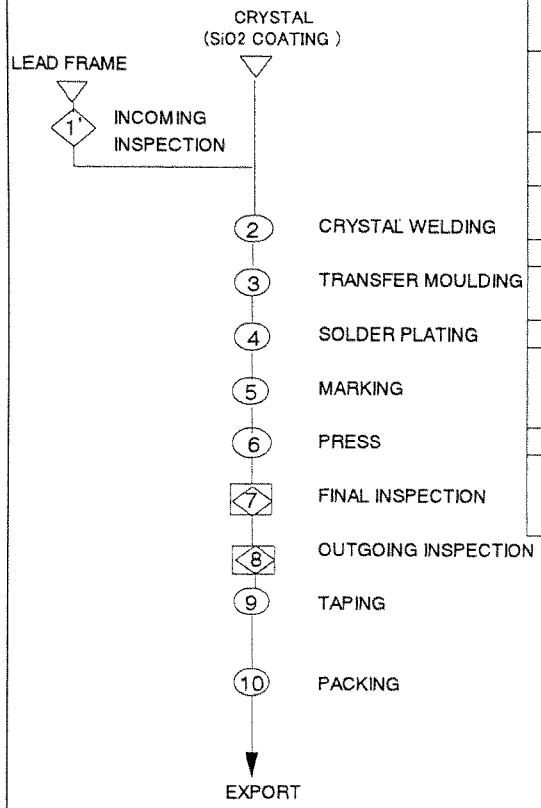

MANUFACTURING PROCESS FLOW CHART	No	RESPONSIBLE SECTION	STANDARD AND SPECIFICATIONS	INSPECTION AND CONTROL ITEMS	INSPECTION METHORD	MEASURING INSTRUMENTS	DATA COLLECTION
	1	SUB-CONTRACTOR	PURCHASE SPECIFICATION	APPEARANCE	SAMPLING	MS SCALE SCOPE	INSPECTION DATA
			INCOMING INSPECTION STD.	DIMENSION			
	2	SUB-CONTRACTOR	MANUFACTURING INSTRUCTION	APPEARANCE	100% INSPECTION	MICROSCOPE	DATA INPUT TO PC
				DIMENSION	SAMPLING	SCALE MICRO	RECORD SHEET
				STRENGTH	SAMPLING	PUSH&PULL GAUGE	RECORD SHEET
	3	SUB-CONTRACTOR	MANUFACTURING INSTRUCTION	APPEARANCE	100% INSPECTION	MICROSCOPE	RECORD SHEET
					SAMPLING	X-RAY	RECORD SHEET
	4	SUB-CONTRACTOR	SOLDER PLATING	S.P THICKNESS	SAMPLING	FLUOROSCOPY	RECORD SHEET
			SPECIFICATION SHEET	APPEARANCE	SAMPLING	VISUAL INSPECTION	RECORD SHEET
	5	SUB-CONTRACTOR	MANUFACTURING INSTRUCTION	APPEARANCE	SAMPLING	VISUAL INSPECTION	RECORD SHEET
	6	SUB-CONTRACTOR	MANUFACTURING INSTRUCTION	APPEARANCE	SAMPLING	MICROSCOPE	RECORD SHEET
				DIMENSION	SAMPLING	INSPECTION JIG	RECORD SHEET
	7	SUB-CONTRACTOR	MANUFACTURING INSTRUCTION	ELECTRICAL CHARACTERISTIC	100% INSPECTION	F0 CHECKING By m/c	RECORD SHEET
	8	SUB-CONTRACTOR	QUALITY STD.	APPEARANCE	SAMPLING	MICROSCOPE	OGI INSP.SHEET
				ELECTRICAL CHARACTERISTIC	SAMPLING	T0&CI CHECKER	OGI INSP.SHEET
				DIMENSION	SAMPLING	INSPECTION JIG	RECORD SHEET
	9	SUB-CONTRACTOR	MANUFACTURING INSTRUCTION	TAPING STRENGTH	SAMPLING	STRENGTH TESTER	RECORD SHEET
	10	SUB-CONTRACTOR	MANUFACTURING INSTRUCTION	EXPORT CUSTOMER LIST			EXPORT DOCUMENTS
			PACKING INSTRUCTION	FREQUENCY			
			THE LIST OF EXPORT DAILY BASE	QUANTITY			

QC PROCESS FLOW SHEET

CODE : MC-306
Control No. : 45-00-03-AGE-3

25-May-05
EPSON TOYOCOM CORP.
INA PLANT QZ BU

PREPARED	CHECKED	APPROVED
	K. Maezawa	

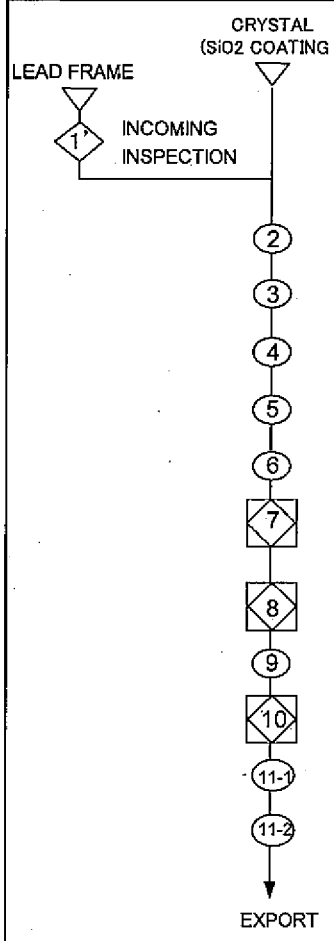

No.	RESPONSIBLE SECTION	STANDARD AND SPECIFICATIONS	INSPECTION AND CONTROL ITEMS	INSPECTION METHORD	MEASURING INSTRUMENTS	DATA COLLECTION
1	MALAYSIA PLANT (Sub-Contractor)	PURCHASE SPECIFICATION INCOMING INSPECTION STD.	APPEARANCE DIMENSION	SAMPLING SAMPLING	MICROSCOPE MS SCALE SCOPE	INSPECTION DATA
2	MALAYSIA PLANT (Sub-Contractor)	MANUFACTURING INSTRUCTION	APPEARANCE	SAMPLING	MICROSCOPE	RECORD SHEET
3	MALAYSIA PLANT (Sub-Contractor)	MANUFACTURING INSTRUCTION	APPEARANCE	SAMPLING SAMPLING	MICROSCOPE VISUAL INSPECTION	RECORD SHEET RECORD SHEET
4	MALAYSIA PLANT (Sub-Contractor)	SOLDER PLATING SPECIFICATION SHEET	S.P THICKNESS S.P ORGANIZATION APPEARANCE	SAMPLING DATA SAMPLING DATA	FLUOROSCOPY MICROSCOPE	RECORD SHEET RECORD SHEET RECORD SHEET
5	MALAYSIA PLANT (Sub-Contractor)	MANUFACTURING INSTRUCTION	APPEARANCE	SAMPLING	VISUAL INSPECTION	RECORD SHEET
6	MALAYSIA PLANT (Sub-Contractor)	MANUFACTURING INSTRUCTION	APPEARANCE DIMENSION	SAMPLING SAMPLING	MICROSCOPE INSPECTION JIG	RECORD SHEET RECORD SHEET
7	MALAYSIA PLANT (Sub-Contractor)	MANUFACTURING INSTRUCTION	ELECTRICAL CHARACTERISTIC	100% INSPECTION	F0 CHECKING By m/c	RECORD SHEET
8	MALAYSIA PLANT (Sub-Contractor)	QUALITY STD.	APPEARANCE ELECTRICAL CHARACTERISTIC DIMENSION	SAMPLING SAMPLING SAMPLING	MICROSCOPE T0&CI CHECKER INSPECTION JIG	OGI INSP.SHEET OGI INSP.SHEET RECORD SHEET
9	MALAYSIA PLANT (Sub-Contractor)	MANUFACTURING INSTRUCTION	TAPING STRENGTH	SAMPLING	STRENGTH TESTER	RECORD SHEET
10	MALAYSIA PLANT (Sub-Contractor)	QUALITY STD.	APPEARANCE	100% INSPECTION	MICROSCOPE	OGI INSP.SHEET
11-1	MALAYSIA PLANT (Sub-Contractor)	MANUFACTURING INSTRUCTION PACKING INSTRUCTION THE LIST OF EXPORT DAILY BASE	EXPORT CUSTOMER LIST FREQUENCY QUANTITY	--- 	--- 	EXPORT DOCUMENTS
11-2	MALAYSIA PLANT	MANUFACTURING INSTRUCTION PACKING INSTRUCTION THE LIST OF EXPORT DAILY BASE	EXPORT CUSTOMER LIST FREQUENCY QUANTITY	--- 	--- 	EXPORT DOCUMENTS

MC-306 Structure diagram

Unit : mm

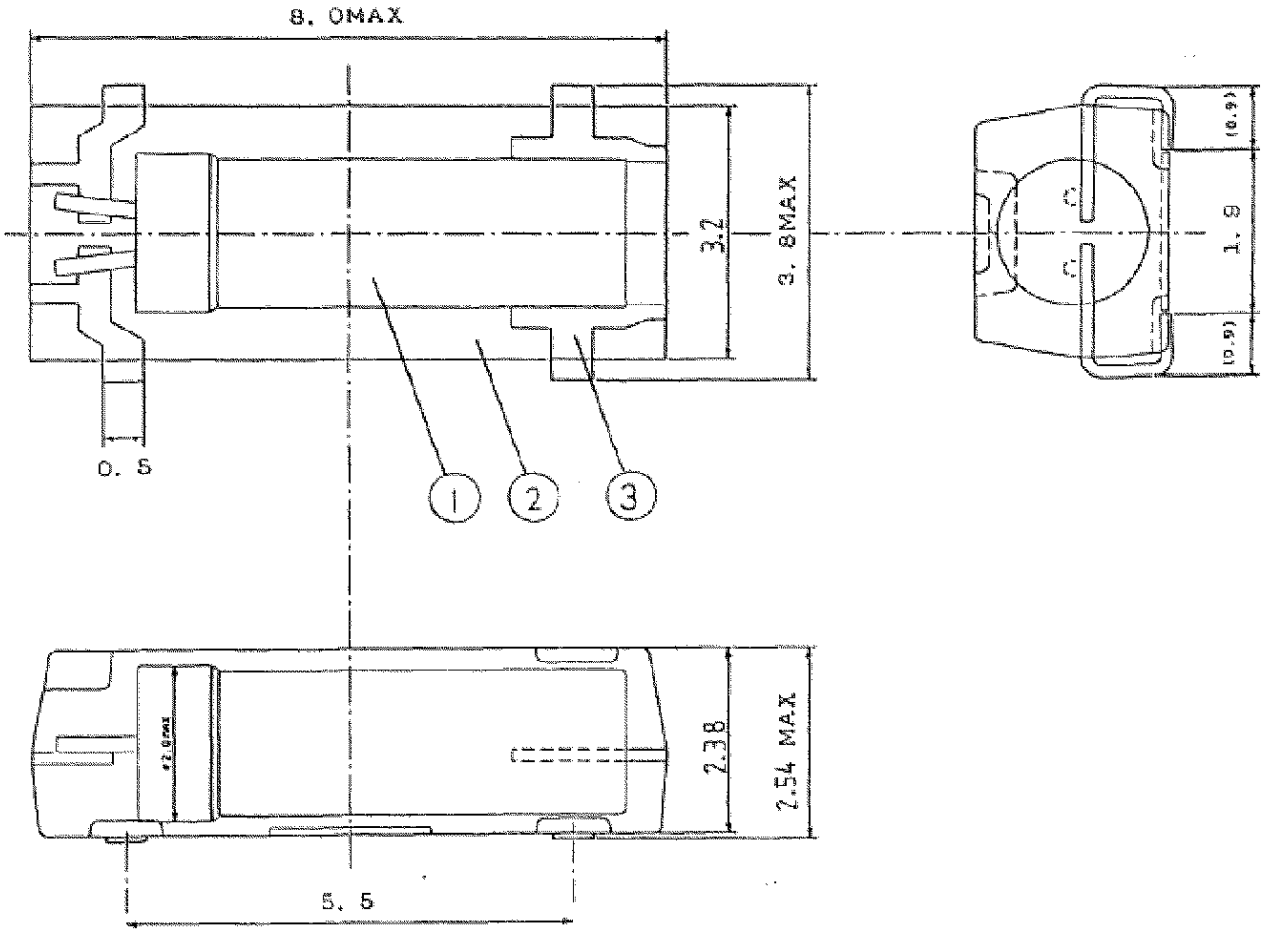

No.	Name of Part	Material	Remarks
③	Lead	42Alloy	Solder Plating (Pb free)
②	Molding	Epoxy Compound (Halide free)	————
①	Crystal C-002SH	————	————

EPSON TOYOCOM

RELIABILITY TEST DATA

Product Name : MC-306 (Halide free mold)

The Company evaluation condition

We evaluate environmental and mechanical characteristics by the following test condition . **No.F-45-0001-02-007EH**

No.	ITEM	TEST CONDITIONS	VALUE *1 *2 Δ f / f [1 × 10^{-6}]	TEST Qty [n]	FAIL Qty [n]
1	Drop	Free drop from 750 mm height on a hard wooden board for 3 times (Board is thickness more than 30 mm)	± 5	22	0
2	Vibration	10 Hz to 55 Hz amplitude 0.75 mm 55 Hz to 500 Hz acceleration 98 m/s^2 10 Hz → 500 Hz → 10 Hz 15 min / cycle 6 h (2 h × 3 directions)	± 3	22	0
3	High temperature storage	a) +125℃ × 1 000 h b) +85 ℃ × 1 000 h	*3 a) ± 20 *3 b) ± 10	a) 22 b) 22	a) 0 b) 0
4	Low temperature storage	-55 ℃ × 1 000 h	*3 ± 20	22	0
5	Temperature cycle	-55 ℃ ⇔ +125 ℃ 30 min at each temp. 100 cycles	*3 ± 20	22	0
6	Temperature humidity storage	+85 ℃ × 85 %RH × 1 000 h	*3 ± 20	22	0
7	Resistance to soldering heat	For convention reflow soldering furnace (2 times)	± 5	22	0
8	Shear	20 N press for 10 ± 1 s Ref. IEC 60068-2-21	No peeling - off at a solder part	11	0
9	Pull - off	10 N press for 10 ± 1 s Ref. IEC 60068-2-21	No peeling - off at a solder part	11	0
10	Solvent resistance	Ref. JIS C 0052 or IEC 60068-2-45	The marking shall be legible	11	0
11	Solderability	Dip termination into solder bath at +235 ℃ ± 5 ℃ for 3 s (Using Rosin Flux)	Termination must be 95 % covered with fresh solder	11	0

Notes

1. *1 Each test done independently.
2. *2 Measuring 2 h to 24 h later leaving in room temperature after each test.
3. *3 Pre conditionings Initial value shall be after 24 h at room temperature.
4. Shift series resistance at before above tests should be less than 60 kΩ.

Signature Approved

Qualification Data

Jun Watanuki / General Manager of QZ Business unit Quality Assurance

EPSON TOYOCOM

Product Name : MC-306 (Halide free mold)

Δ f / f

No.F-45-0001-02-008EH

1. Drop
750 mm 、 3 times

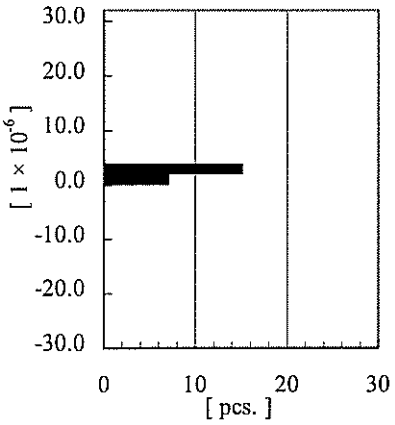

2. Vibration
10 Hz to 55 Hz amplitude 0.75 mm
55 Hz to 500 Hz acceleration 98 m/s²
15 min/cycle 6 h(2 h 、 3 directions)

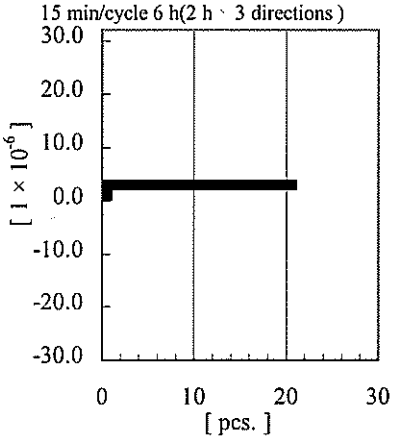

3. High temp. storage
a) +125 ℃ × 1 000 h

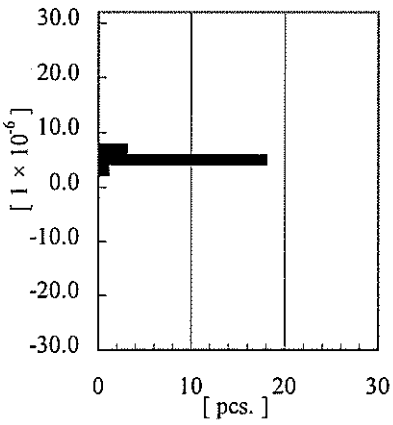

3. High temp. storage
b) +85 ℃ × 1 000 h

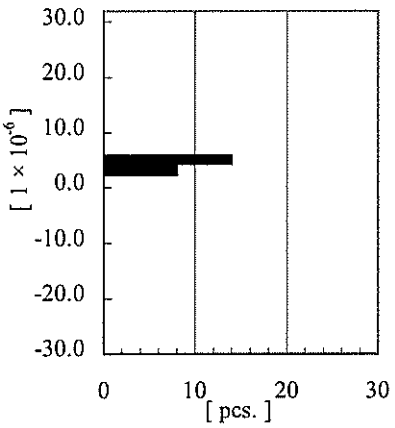

4. Low temp. storage
-55 ℃ × 1 000 h

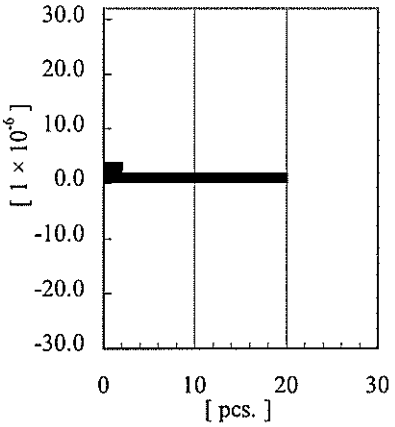

5. Temp. cycle
-55 ℃ ⇔ +125 ℃
100 cycles

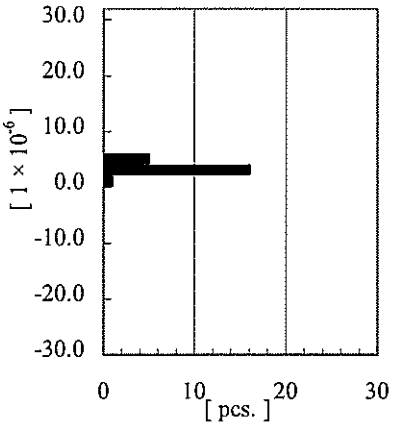

6. Temp. humidity storage
+85 ℃ × 85 %RH × 1 000 h

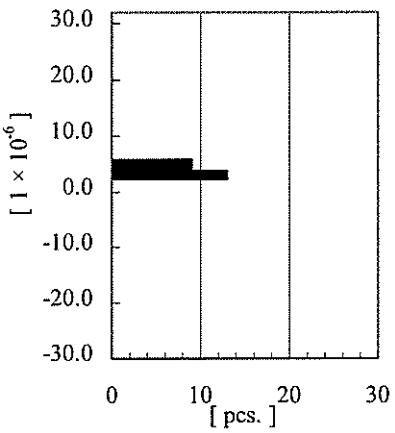

7. Resistance to soldering heat (Reflow 2 times)

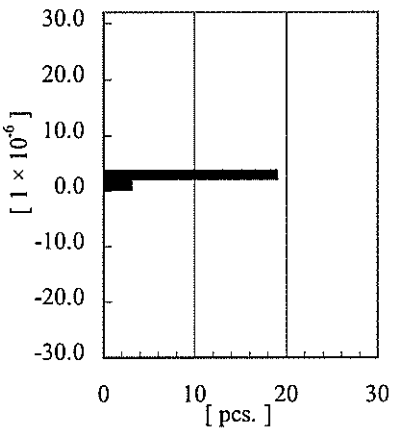

Qualification Data

EPSON TOYOCOM

Product Name : MC-306 (Halide free mold)

CI

No.F-45-0001-02-009EH

1. Drop
750 mm ↘ 3 times

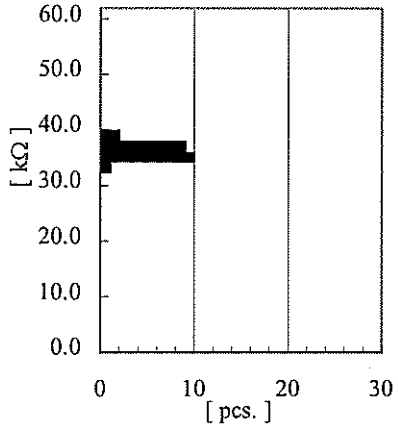

2. Vibration
10 Hz to 55 Hz amplitude 0.75 mm
55 Hz to 500 Hz acceleration 98 m/s^2
15 min/cycle 6 h (2 h ↘ 3 directions)

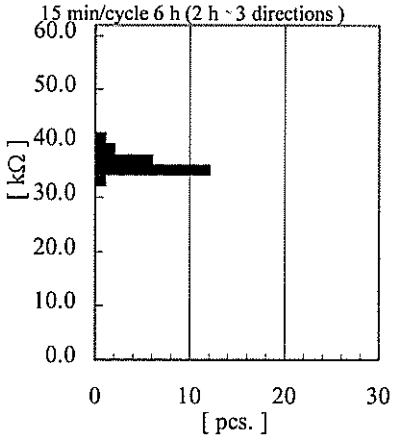

3. High temp. storage
a) +125 ℃ × 1 000 h

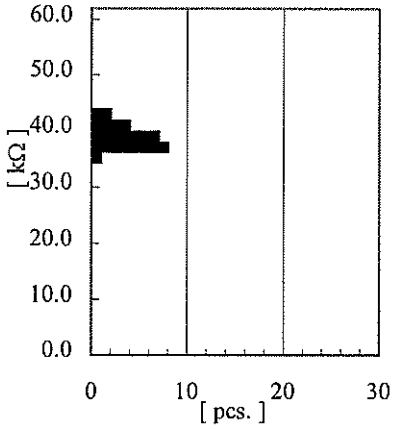

3. High temp. storage
b) +85 ℃ × 1 000 h

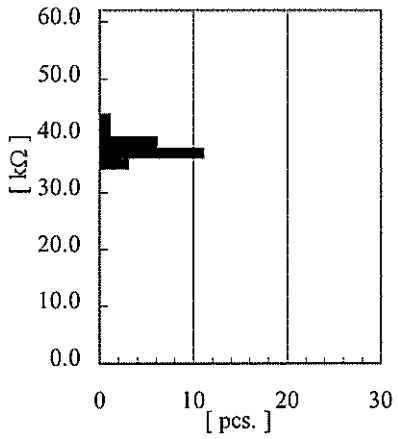

4. Low temp. storage
-55 ℃ × 1 000 h

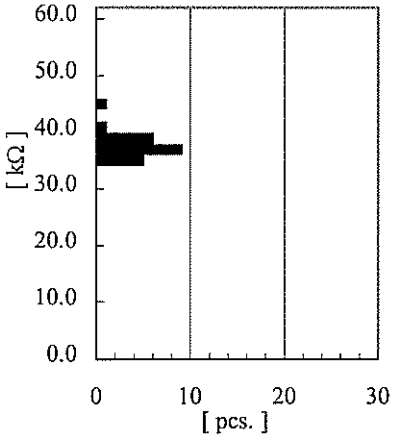

5. Temp. cycle
-55 ℃ ⇔ +125 ℃
100 cycles

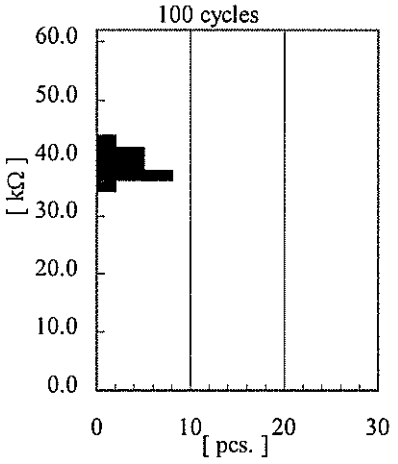

6. Temp. humidity storage
+85 ℃ × 85 %RH × 1 000 h

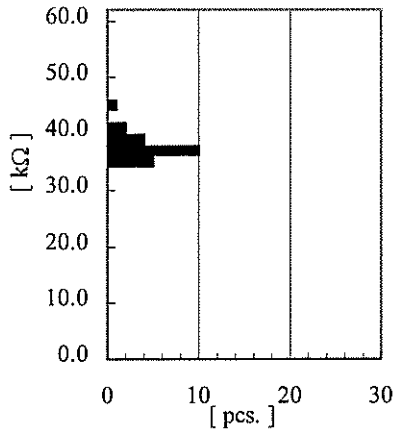

7. Resistance to soldering heat (Reflow 2 times)

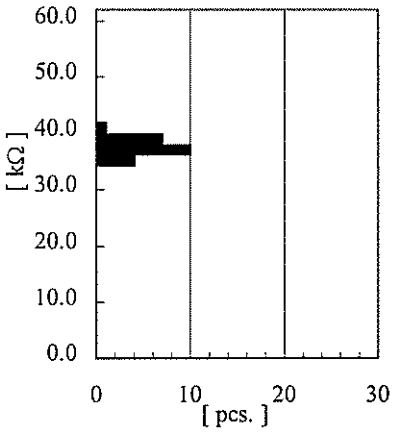

Qualification Data