RECIPIENT

SPECIFICATIONS

Product No. : **Q22FA23V0001200**

MODEL : **FA-238V**

SPEC. No. : **A13-074-2B**

DATE: **Apr. 30. 2013**

SEIKO EPSON CORPORATION

8548 Naka-minowa
Minowa-machi Kamiina-gun
Nagano-ken
399-4696 Japan

CHECKED _____ / TD Production Engineering Department Manager
Kenji Komine

CHECKED _____ / TD Production Engineering Department Senior Staff
Toshiaki Sato

CHECKED _____ / TD・CS Quality Assurance Department Manager
Kazuki Matsumoto

PREPARED _____ / TD・CS Quality Assurance Department Senior Staff
Emi Oguchi

SPECIFICATIONS

1. Application

1) This document is applicable to the crystal unit that are delivered to from Seiko Epson Corp.

2) This product complies with RoHS Directive.
This FA-238V is authorized for Use of Automotive Navigation system only.

3) This Product supplied (and any technical information furnished, if any) by Seiko Epson Corporation shall not be used for the development and manufacture of weapon of mass destruction or for other military purposes.
Making available such products and technology to any third party who may use such products or technologies for the said purposes are also prohibited.

4) This product listed here is designed as components or parts for electronics equipment in general consumer use.
We do not expect that any of these products would be incorporated or otherwise used as a component or part forthe equipment, which requires an systems, and medical equipment, the functional purpose of which is to keep extra high reliability, such as satellite, rocket and other space life.

2. Product No. / Model

The product No. of this crystal unit is Q22FA238V0001200.
The model is FA-238V.

3. Packing

It is subject to the packing standard of Seiko Epson Corp.

4. Warranty

Defective parts which originate with us are replaced free of charge in the case of defects being found with 12 months after delivery.

5. Amendment and/or termination

Amendment and/or termination of this specification is subject to the agreement between the two parties.

6. Contents

Item No.	Item	Page
[1]	Absolute maximum ratings	2
[2]	Operating range	2
[3]	Static characteristics	2
[4]	Environmental and mechanical characteristics	3
[5]	Dimensions and circuit	4
[6]	Recommended soldering pattern and marking layout	5
[7]	Notes	6

7. MSL

MSL level 1

[1] Absolute maximum ratings

No.	Item	Symbol	Rating value			Unit	Note
			Min.	Typ.	Max.		
1	Storage temperature range	T_stg	- 40		+ 125	°C	Depends on the Environmental characteristics specifications.

[2] Operating range

No.	Item	Symbol	Rating value			Unit	Note
			Min.	Typ.	Max.		
1	Operating temperature range	T_use	- 40		+ 80	°C	Depends on the Motional resistance and Frequency temperature characteristics specifications.
2	Level of drive	DL		100	200	μW	Recommended : 100 μW

[3] Static characteristics

No.	Item	Symbol	Value	Unit	Conditions
1	Nominal Frequency	f_nom	13.56	MHz	Fundamental
2	Frequency tolerance	f_tol	± 50	$\times 10^{-6}$	CL = 12 pF Ta = + 25 ± 3 °C DL : 100 μW Not include aging
3	Motional resistance	R1	80 Max.	Ω	π circuit IEC 60444-2 Ta = - 40 °C ~ + 80 °C DL : 100 μW
4	Shunt capacitance	C0	5.0 Max.	pF	π circuit and N.A.
5	Frequency temperature characteristics	f_tem	± 30	$\times 10^{-6}$	Ta = - 40 °C ~ + 80 °C (Ref. at Ta = + 25 °C ± 3 °C) DL : 100 μW
6	Isolation resistance	IR	500 Min.	MΩ	DC 100 V± 15, 60 seconds between each terminals
7	Frequency Aging	f_age	± 5	$\times 10^{-6}$/year	Ta = + 25 °C ± 3 °C

[4] Environmental and mechanical characteristics

(The company evaluation condition：We evaluate it by the following examination item and examination condition.)

No.	Item	Value * 1 * 2 $\Delta f / f [1 \times 10^{-6}]$	Test Conditions
1	Shock	* 3 ± 10	100 g dummy Jig (ETC Standard) drop from 1 500 mm height on the Concrete 3 directions 10 times
2	Vibration	* 3 ± 5	10 Hz to 55 Hz amplitude 0.75 mm 55 Hz to 500 Hz acceleration 98 m/s^2 10 Hz → 500 Hz → 10 Hz 15 min./cycle 6 h (2 hours , 3 directions)
3	High temperature storage	* 3 ± 5	+ 85 °C × 1 000 h
4	Low temperature storage	* 3 ± 5	- 40 °C × 1 000 h
5	Temperature cycle	* 3 ± 5	- 40 °C ↔ + 85 °C 30 minutes at each temp. 100 cycle
6	Temperature humidity storage	* 3 ± 10	+ 85 °C × 85 %RH × 1 000 h
7	Resistance to soldering heat	± 5	For convention reflow soldering furnace (3 times)
8	Substrate bending	No peeling-off at a soldered part	Bend width reaches 3.0 mm and hold for 5 s ± 1 s × 1 time Ref. IEC 60068-2-21
9	Shear	No peeling-off at a soldered part	20 N press for 10 s ± 1 s Ref. IEC 60068-2-21
10	Pull – off	No peeling-off at a soldered part	10 N press for 10 s ± 1 s Ref. IEC 60068-2-21
11	Solderability	Terminals must be 95 % covered with fresh solder.	Dip termination into solder bath at + 235 °C ± 5 °C for 5 s (Using Rosin Flux)

< Notes >

1. * 1 Each test done independently.
2. * 2 Measuring 2 h to 24 h later leaving in room temperature after each test.
3. * 3 Item No.1 to No.6 shall be tested after following pre conditioning.
   Measuring 24 h later leaving in room temperature after Pre conditioning.
   Pre conditioning : Reflow 3 times.
4. Item No.1 to No.7, Shift motional resistance at after above tests should be less than 20 % or less than 10 Ω.

◆Reflow

Pre Heating Temperature
Tp1 ~ Tp2 = + 170 °C
Heating Temperature
TMlt = + 220 °C
Peek Temperature
TMax. = + 260 °C

Point of measuring
In case of Solderability
Terminal.
In case of Resistance to soldering heat
Surface.

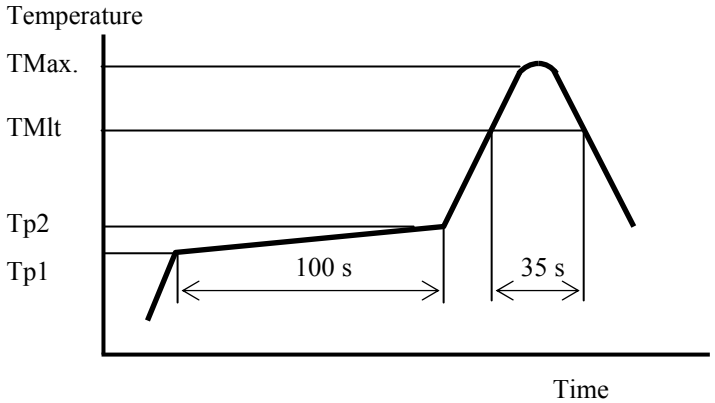

[5] Dimensions and Circuit

1) Dimension

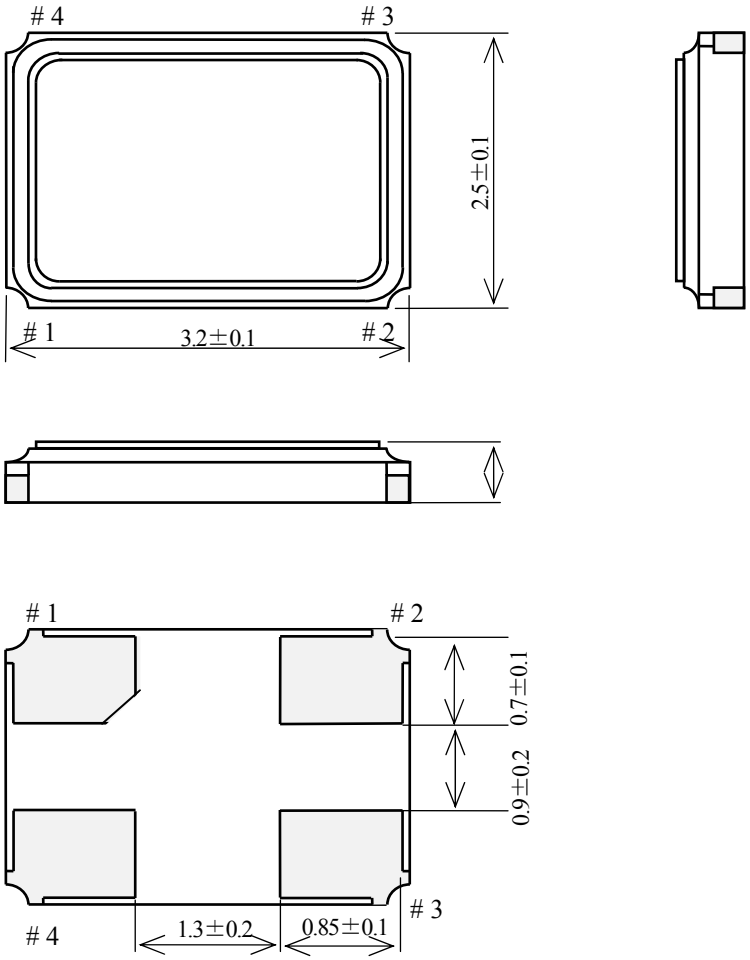

Terminal Au plate : 1.5 μm Max.

2) Circuit

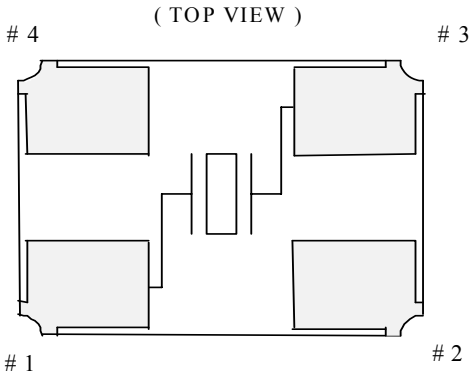

1 , # 3 : XTAL
2 , # 4 : GND (are connected to the cover)

Type : FA-238 V	Terminal treatment : Au plate	Unit : 1 = 1 mm

[6] Recommended soldering pattern and Marking layout

1)Recommended soldering pattern

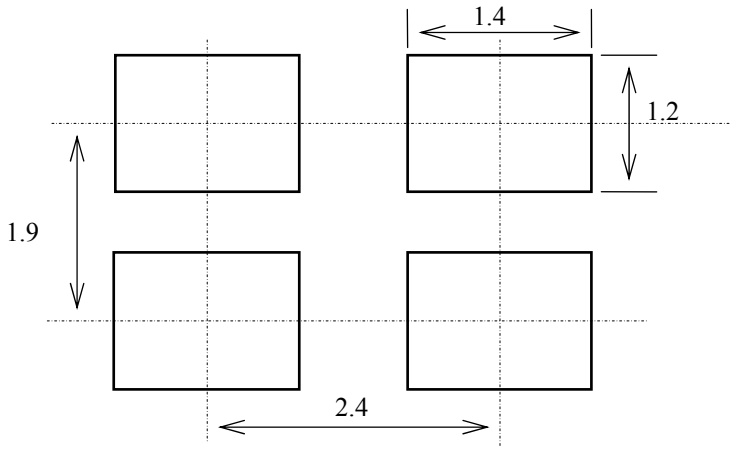

2) Marking layout

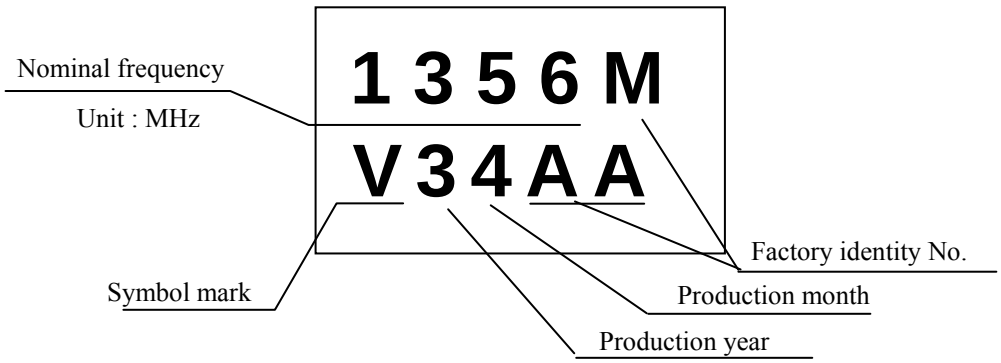

Production month

January	February	.....	October	November	December
1	2	.....	X	Y	Z

- Nominal frequency is only one example.
- Nominal frequency omits the figure below the second place of decimals.
  ex) 13.56 MHz ..... [1356]
- The above marking layout shows only marking contents and their approximate position and it is not for font, size and exact position.

Type : FA-238V	Unit : 1 = 1 mm

[7] Notes

1. Max. three(3) times re-flow is allowed. Its recommended to manually solder when not enough/no solder detected.(Using soldering iron at +350 °C Max × within 5 seconds)

2. Patterning on a board should follow our company recommended pattern.

3. Too much exciting shock or vibration may cause deterioration on damage.
   The product may damage depends on the condition such as a shock in assembly machinery.
   Please check your process condition in advance to minimize and maintain the shock level.

4. It is recommended to do patterning to the oscillator as short as possible. Abnormal oscillation may happened if the line is too long.

5. Condensation may occur when products are used/stored under remarkable temperature change.

6. This product may be affected to ultrasonic cleaning. It is depends on the cleaning conditions (Cleaning machine type/power/time/content/position etc.). The warranty will not cover any damage due to this type of usage. Check conditions prior to use.

7. When the substrate of oscillation become dewy, the crystal frequency is changed or stopped. Please use under without the dewfall.

8. Applying excessive excitation Drive Level to the crystal Unit may cause deterioration damage.

9. Few data or readings taken at user side may be different from our company's data. Confirmation of the different value is necessary before application.

10. To avoid malfunction, no pattern across or near the crystal is allowed.

11. Start up time of oscillation may be increased or no oscillation may occur unless adequate negative resistance is allocated in the oscillation circuit In order to avoid this, please provide enough negative resistance to the circuit design.

    How to check the negative resistance

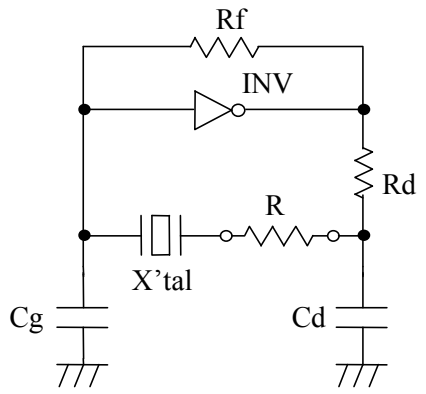

(1) Connect the resister(R) to the circuit in series with the crystal Unit.

(2) Adjust R so that oscillation can start (or stop).

(3) Measure R when oscillation just start (or stop) in above (2).

(4) Get the negative resistance
    -R=R+CI value.

(5) Recommended -R
    [-R] > CI × 5

12. Please refer to packing specification for the storage method and packing standard.

TAPING SPECIFICATION

1. APPLICATION

This document is applicable to FA-238V

2. CONTENTS

Item No.	Item	Page
[1]	Taping specification	1 to 2
[2]	Inner carton	3
[3]	Shipping carton	
[4]	Marking	4
[5]	Quantity	
[6]	Storage environment	
[7]	Handling	

[1] Taping specification

Subject to EIA-481 & IEC-60286

(1) Tape dimensions TE0804L

Material of the Carrier Tape : PS

Material of the Top Tape : PET+PE

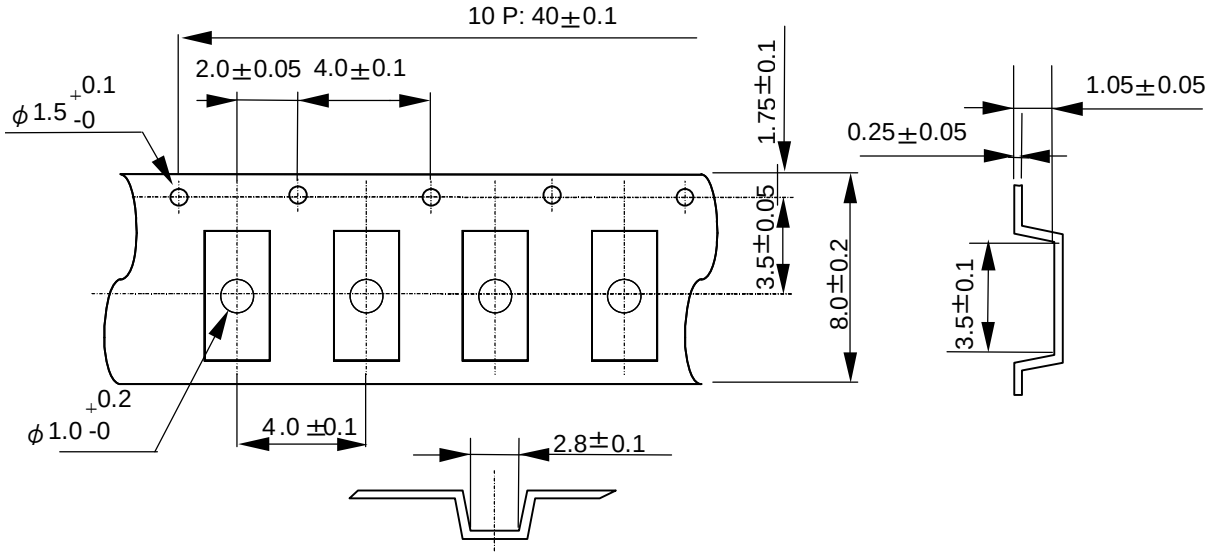

(2) Reel dimensions

(a) Center material : PS

(b) Material of the Reel : PS

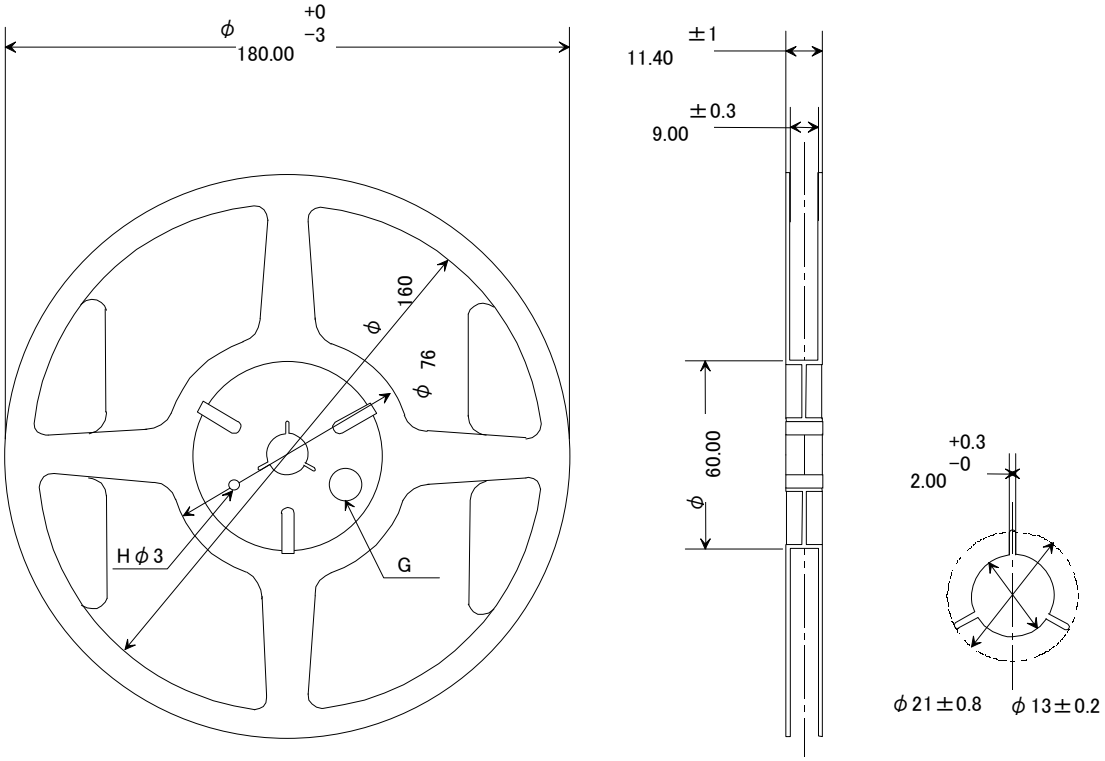

(3) Packing

(a) Tape & Reel

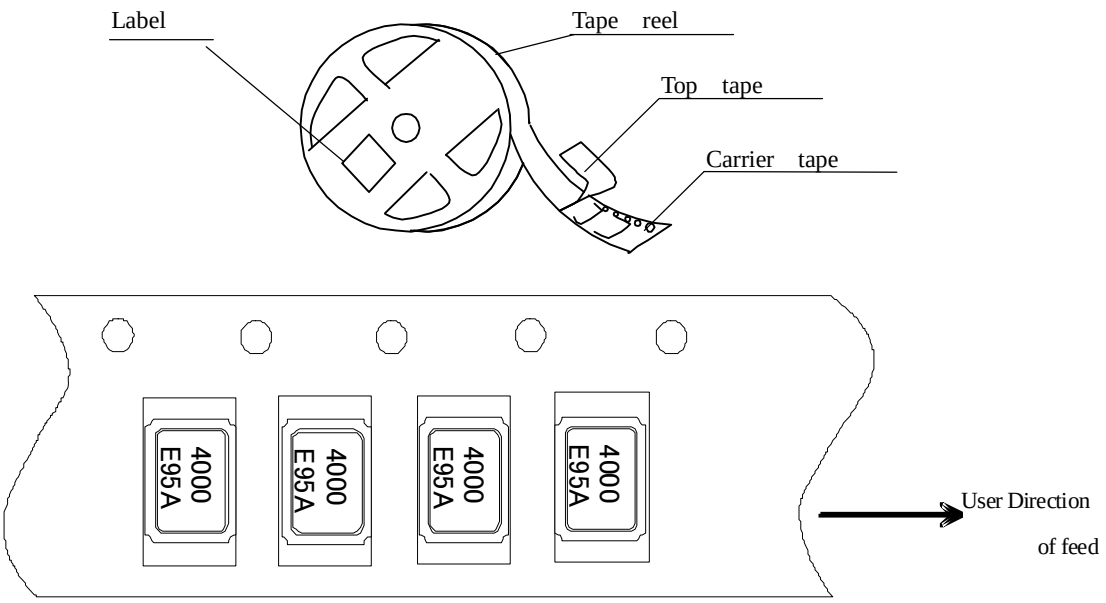

(b) Start & End Point

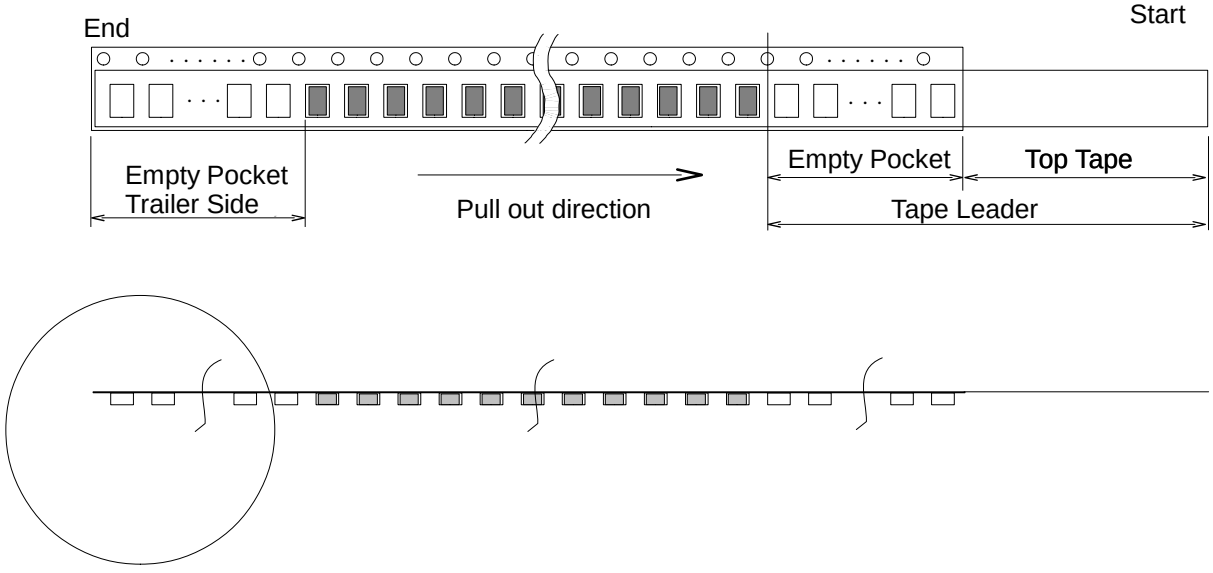

Item		Empty Space
Tape Leader	Top Tape	Min. 1 000 mm
	Carrier Tape	Min. 100 mm
Tape Trailer	Top Tape	Min. 0 mm
	Carrier Tape	Min. 160 mm

(4) Peel force of the cover tape

① angle : cover tape during peel off and the direction of unreeling shall be 165° to 180°.

② peel speed : 300 mm / min.

③ strength : 0.1 to 1 N.

[2] Inner Carton

a) Packing to antistatic bag

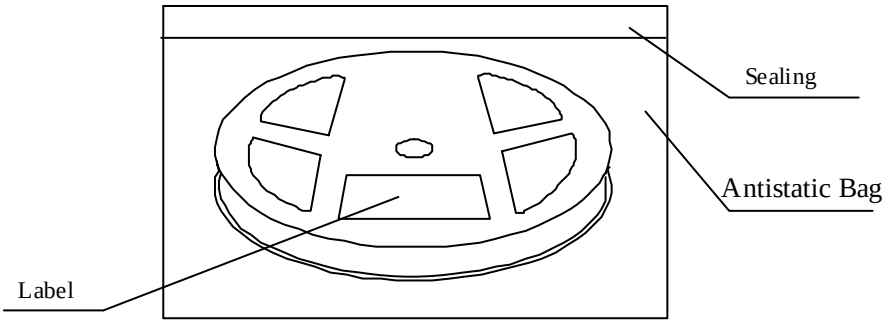

b) Packing to inner carton

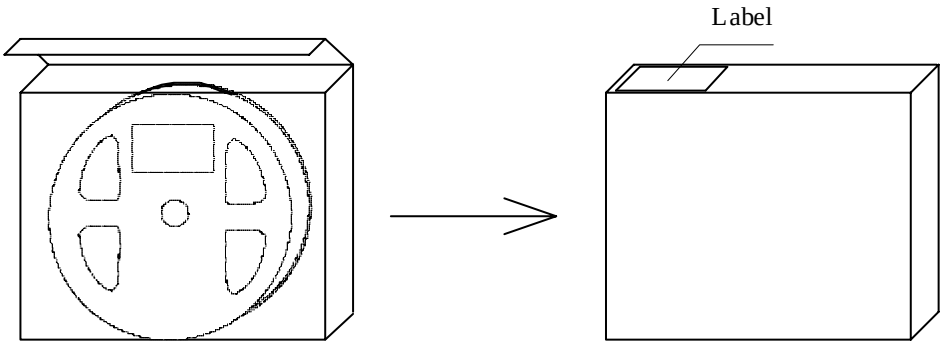

[3] Shipping Carton

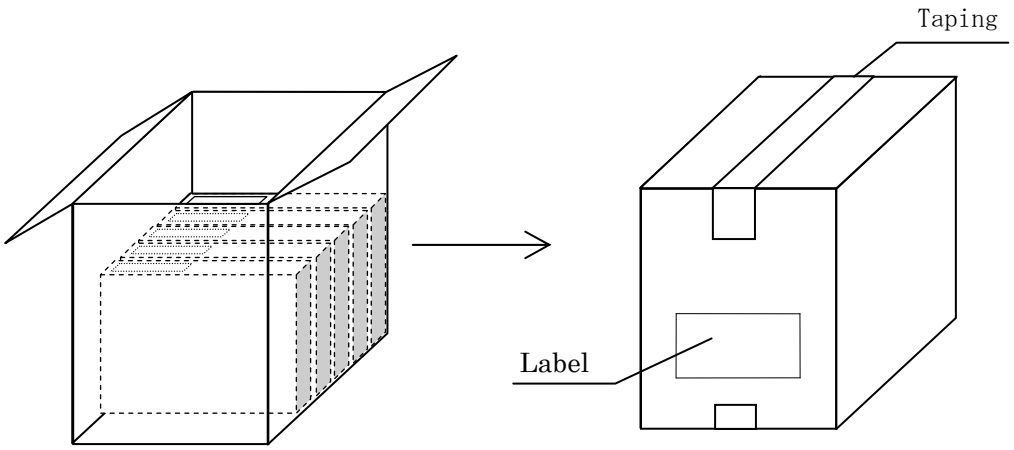

[4] Marking

(1) Reel marking

- Reel marking shall consist of :

1) Parts name
2) Quantity
3) Manufacturing Date or symbol
4) Manufacturer's Date or symbol
5) Others (if necessary)

(2) Inner carton marking

- Same as Reel marking.

(3) Shipping carton marking

- Shipping carton marking shall consist of :

1) Parts name
2) Quantity

[5] Quantity

- 3 000 pcs./reel

[6] Storage environment

(1) To storage the reel at +15 °C to +35 °C , 25 %RH to 85 %RH of Humidity.
(2) To open the packing just before using.
(3) Not to expose the sun.
(4) Not to storage with some erosive chemicals.
(5) Nothing is allowed to put on the reel or carton to prevent mechanical damage.

[7] Handling

To handle with care to prevent the damage of tape, reel and products.

- PROCESS QUALITY CONTROL -

No.A-0303-02-AAE-6 **SMD TYPE AT STRIP CRYSTAL FA-238V**

12.9.14

Manufacturing process chart	No.	Section	Standards	Inspection, Control Items	Inspection Methods	Instrument	Record
CRYSTAL BLOCK	1	Inspection Section (Ina Plant)	Purchasing Specification Incoming Inspection Standard	Dimension Outer Appearance Inner Appearance	Sampling 〃 〃	Length Gauge Visual Inspection Visual Inspection	In-Coming Inspection Data Sheet
① In-coming Inspection	1'	Inspection Section (Ina Plant)	〃	Dimension Outer Appearance	Sampling 〃	Comparator Microscope	〃
② Wafer Cutting	2	Ploduction Section (Ina/China Plant)	Manufacturing Instruction Sheet	Cut Angle Wafer Thickness	Sampling 〃	X-ray Radio Grafic Comparator	Process Data Sheet
③ Wafer Lapping	3	Ploduction Section (Ina/China Plant)	〃	Frequency Wafer Thickness	Sampling 〃	Blank Osillator Comparator	〃
Seramic Base ④ Chip Cutting	4	Ploduction Section (Ina/China Plant)	〃	Dimension	Sampling	Comparator	〃
⑤ Etching	5	Ploduction Section (Ina/China Plant)	〃	Frequency Outer Appearance	Sampling 〃	Blank Osillator Microscope	〃
①' In-coming Inspection ⑥ Deposition	6	Ploduction Section (Ina/Malaysia Plant)	〃	Frequency Outer Appearance	Sampling 〃	Blank Osillator Microscope	〃
Lid ⑦ Mounting	7	Ploduction Section (Ina/Malaysia Plant)	〃	Outer Appearance	Sampling	Microscope	〃
①' In-coming Inspection ⑧ Frequency Adjustment	8	Ploduction Section (Ina/Malaysia Plant)	〃	Frequency	Sampling	Frequency Counter	〃
⑨ Welding	9	Ploduction Section (Ina/Malaysia Plant)	〃	Outer Appearance	Sampling	Microscope	〃
⑩ Leak Test	10	Ploduction Section (Ina/Malaysia Plant)	〃	Package Leak	100% Inspection	Leak Tester	〃
⑪ Marking	11	Ploduction Section (Ina/Malaysia Plant)	〃	Outer Appearance	Sampling	Microscope	〃
⑫ Characteristic Inspection	12	Ploduction Section (Ina/Malaysia Plant)	〃	Crystal Impedance Frequency Insulation Resistance Temp. Characteristic	100% Inspection 〃 〃 Sampling	Inspection M/C 〃 〃 〃	〃
⑬ Out-going Inspection	13	Inspection Section (Ina/Malaysia Plant)	Out-going Inspection Standard	Crystal Impedance Frequency Insulation Resistance Outer Appearance	Sampling 〃 〃 〃	Inspection M/C 〃 〃 Microscope	Out-going Inspection Data Sheet
⑭ Taping	14	Ploduction Section (Ina/Malaysia Plant)	Manufacturing Instruction Sheet	Tape-Peel Strength	Sampling	Peeling Force Tester	Process Data Sheet
⑮ Packing	15	Ploduction Controle Section (Ina/Malaysia Plant)	Manufacturing Instruction Sheet Packing Instruction Sheet	Destination Quantity	——	——	Delivery Slip

ＦＡ－２３８Ｖ Construction Drawing

No.：A-0303-AE-2

Unit：mm

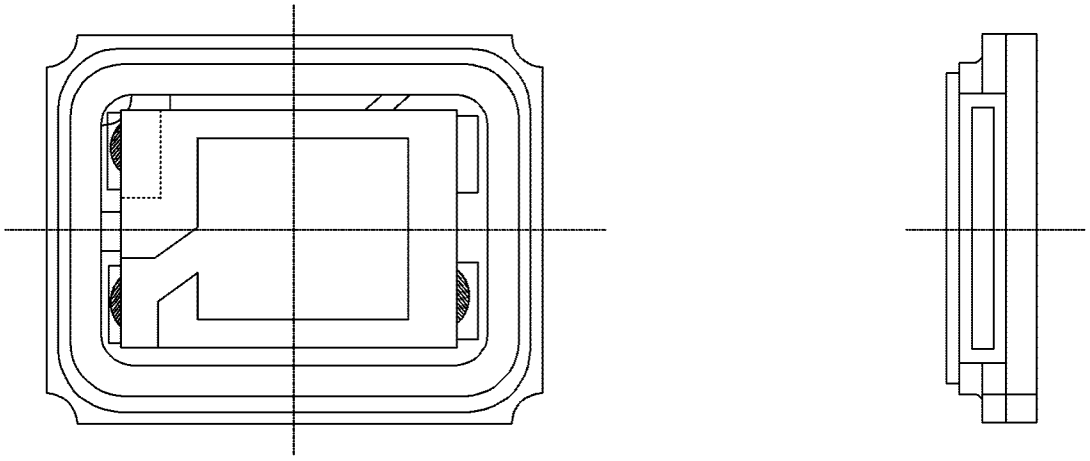

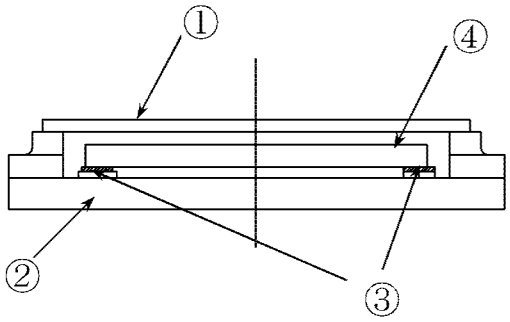

No	Parts NAME	Material	Surface Treatment
①	LID	Covar	Ni Plating
②	BASE	Ceramic・Covar	Au Plating
③	Ag Paste	Bonding Paste of Electric Conductor	
④	Crystal Chip	Crystal	Electrode Pattern(Cr+Au)

RELIABILITY TEST DATA

Product Name : FA-238V

The Company evaluation condition

We evaluate environmental and mechanical characteristics by the following test condition . **No. F-A-0303-01-001E**

No.	ITEM	TEST CONDITIONS	VALUE *1 *2 Δ f / f [1 × 10^{-6}]	TEST Qty [n]	FAIL Qty [n]
1	Shock	100g dummy Jig (SEIKO EPSON Standard) drop from 1500 mm height on the Concrete 3 directions 10 times	± 10	22	0
2	Vibration	10 Hz to 55 Hz amplitude 0.75 mm 55 Hz to 500 Hz acceleration 98 m/s^2 10 Hz → 500 Hz → 10 Hz 15 min / cycle 6 h (2 h × 3 directions)	± 5	22	0
3	High temperature storage	+85 °C × 1 000 h	*3 ± 5	22	0
4	Low temperature storage	-40 °C × 1 000 h	*3 ± 5	22	0
5	Temperature cycle	-40 °C ⇔ + 85 °C 30 min at each temp. 100 cycles	*3 ± 5	22	0
6	Temperature humidity storage	+85 °C × 85 %RH × 1 000 h	*3 ± 10	22	0
7	Resistance to soldering heat	For convention reflow soldering furnace (3 times)	± 5	22	0
8	Substrate bending	Bend width reaches 3.0 mm and hold for 5 s ± 1 s × 1 time Ref. IEC 60068-2-21	No peeling - off at a solder part	11	0
9	Shear	10 N press for 10 s ± 1 s Ref. IEC 60068-2-21	No peeling - off at a solder part	11	0
10	Pull - off	10 N press for 10 s ± 1 s Ref. IEC 60068-2-21	No peeling - off at a solder part	11	0
11	Solderability	Dip termination into solder bath at +235 °C ± 10 °C for 5 s (Using Rosin Flux)	Termination must be 90 % covered with fresh solder	11	0

Notes

1. *1 Each test done independently.
2. *2 Measuring 2 h to 24 h later leaving in room temperature after each test.
3. *3 Measuring 24 h later leaving in room temperature after each test.
    1. Reflow 3 times
    2. Initial value shall be after 24h at room temperature.
4. Shift series resistance at before above tests should be less than ±20 % or less than ±10 Ω .

Qualification Data

Product Name : FA-238V

Δ f / f

No. F-A-0303-01-002E

1. Shock

100g × 1500 mm ×
3 directions × 10 times

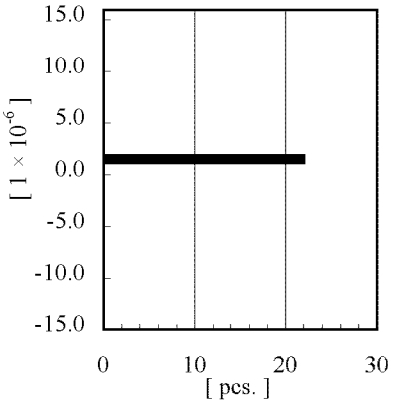

2. Vibration

10 Hz to 55 Hz amplitude 0.75 mm
55 Hz to 500 Hz acceleration 98 m/s^2
15 min / cycle 6 h (2 × 3 directions)

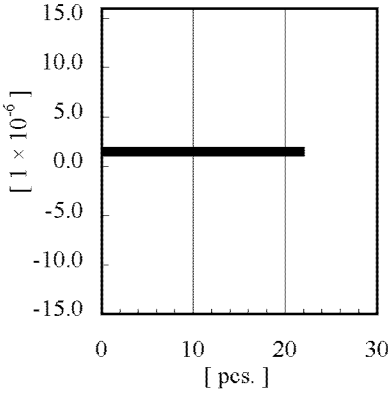

3. High temp. storage

+85 °C × 1 000 h

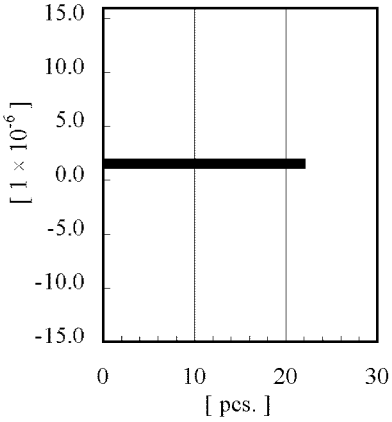

4. Low temp. storage

-40 °C × 1 000 h

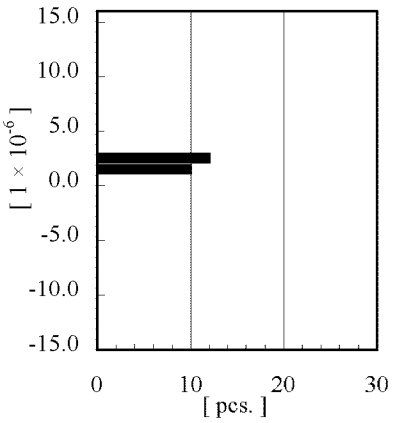

5. Temp. cycle

-40 °C ⇔ +85 °C
100 cycles

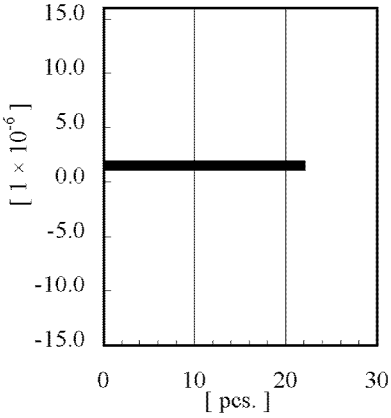

6. Temp. humidity storage

+85 °C × 85 %RH × 1 000 h

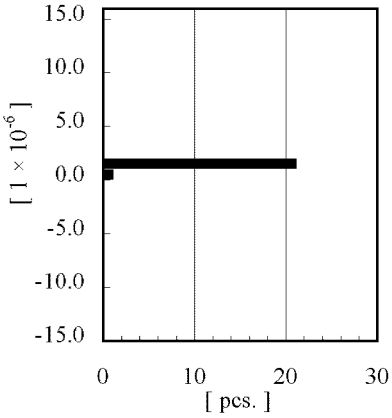

7. Resistance to soldering heat

For convention reflow
soldering furnace (3 times)

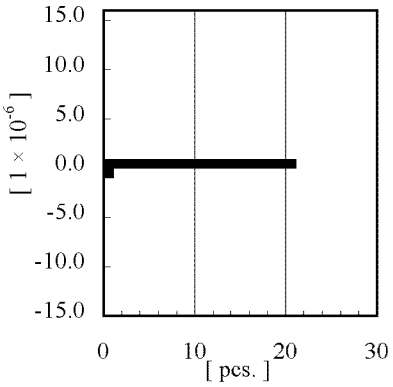

Qualification Data

Product Name : FA-238V

ΔCI

No. F-A-0303-01-003E

1. Shock

100g × 1500 mm ×
3 directions × 10 times

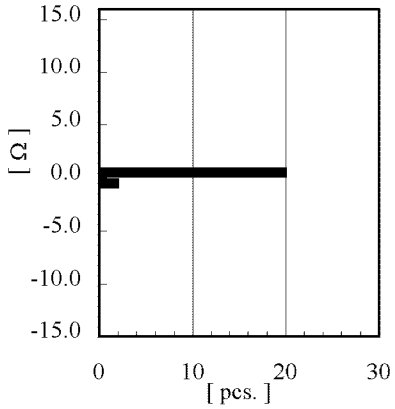

2. Vibration

10 Hz to 55 Hz amplitude 0.75 mm
55 Hz to 500 Hz acceleration 98 m/s^2
15 min /cycle 6 h (2 h ×3 directions)

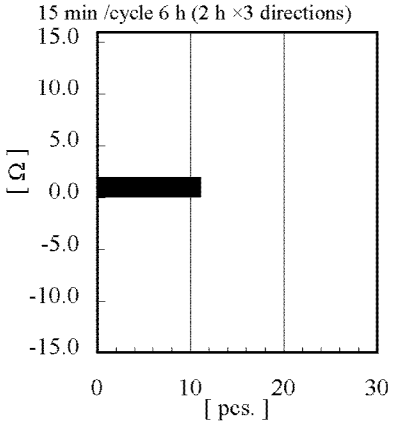

3.High temp. storage

+85 °C × 1 000 h

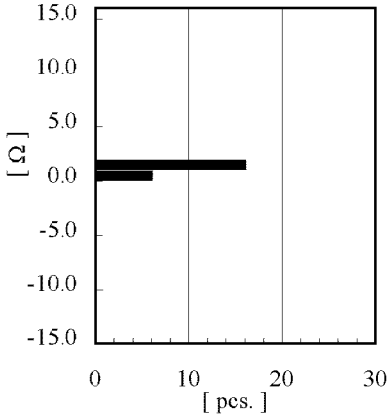

4. Low temp. storage

-40 °C × 1 000 h

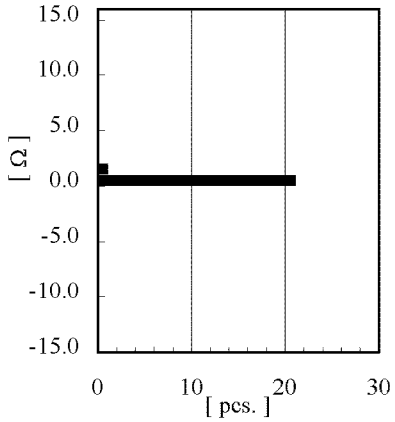

5. Temp. cycle

-40 °C ⇔ +85 °C
100 cycles

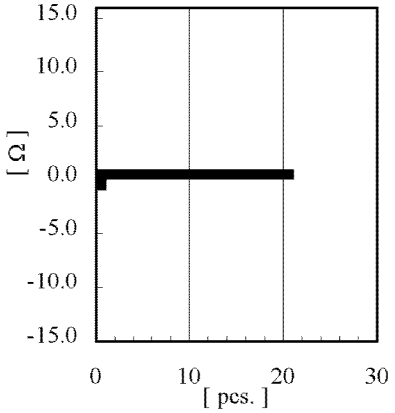

6. Temp. humidity storage

+85 °C × 85 %RH × 1 000 h

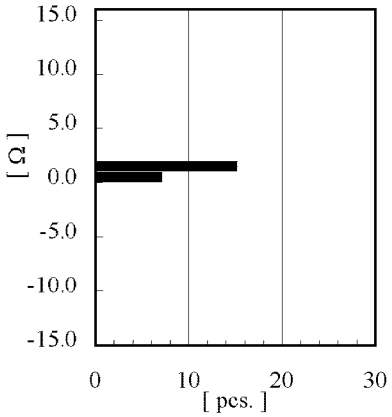

7. Resistance to soldering heat

For convention reflow
soldering furnace (3 times)

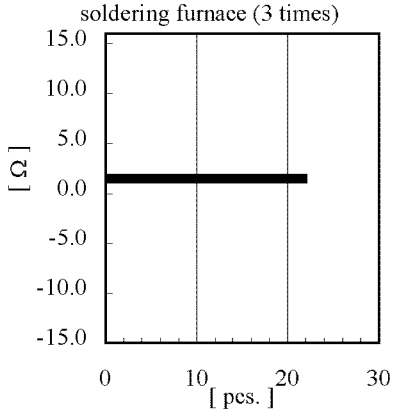

Qualification Data

ATTN : Shenzhen RoadRover Technology Co., Ltd

Quality and reliability data

No.ST13-055
Apr., 30, 2013
SEIKO EPSON CORP.
TD・CS QUALITY ASSURANCE DEPARTMENT

Type : FA-238V

·Machine Model
JEDEC JESD22-A115-A
(C=200 pF;R=0 Ω) : > ±400 Volt

·Human Body Model
JESD22-A114D
(C=100 pF;R=1 500 Ω) : > ±2 000 Volt

Criterion : Frequency change rate exceeded ± 2×10^{-6}