TXC CORPORATION

www.txccorp.com

SPECIFICATION FOR APPROVAL

CN: _____

CUSTOMER	:	
PRODUCT TYPE	:	SMD SEAM SEALING CXO 2.5 × 2.0
NOMINAL FREQ.	:	40.000000MHz
TXC P/N	:	AW40000002
REVISION	:	A1
CUSTOMER P/N	:	
PM / SALES	:	
DATE	:	
CUSTOMER CONFIRMATION	:	(Singnature)
		(Date)

(1) TXC requires one copy returned with signature and title of authorized individual that signifies acceptance of the attached specifications.

(2) Orders received and accepted by TXC after return of signed copy of specification will be produced per these specifications.

(3) Any changes to these specifications must be agreed upon by both parties and new revision of the Product Specification Sheet will be issued.

(4) Any issuance of purchase order prior to consigning back the Approval page of "Specification Sheets" from customers will be regarded as the agreement on the contents of these specifications.

MSL:Level 1
RoHS Compliant

(for glass crystal only：Pb used in sealing glass material is exempt from EU directive)

TXC confidential and proprietary document

TXC CORPORATION

www.txccorp.com

PRODUCT SPECIFICATION SHEET

CN: _____

PRODUCT TYPE	:	SMD SEAM SEALING CXO 2.5 × 2.0
NOMINAL FREQ.	:	40.000000MHz
TXC P/N	:	AW40000002
REVISION	:	A1

PE/RD	QA	MFG
Oscar Chen	Alex Huang	Andrew Wei
9-Jan-18	*9-Jan-18*	*9-Jan-18*

NOTE:

(1) The green product standard set by TXC is based upon the international standards. Related information is publicly described on the TXC's Website, and updated regularly. The document is compliant with the latest green product quality system directives at the time.

(2) Revision "Sx" is for engineering samples only. PE/RD's approval required.

(3) Revision "Ax" is production ready. PE, QA and MFG's approval required.

MSL:Level 1
RoHS Compliant

(for glass crystal only：Pb used in sealing glass material is exempt from EU directive)

TXC confidential and proprietary document

Rev	Revise page	Revise contents	Date	Ref.No.	Reviser
A1	N/A	Initial released	9-Jan-18	N/A	Yachuan Miao

TXC confidential and proprietary document

■ ELECTRICAL SPECIFICATIONS

Standard atmospheric conditions

Unless otherwise specified, the standard range of atmospheric conditions for making measurement and tests are as follow:

Ambient temperature : 25±5℃

Relative humidity : 40%~70%

If there is any doubt about the results, measurement shall be made within the following limits:

Ambient temperature : 25±3℃

Relative humidity : 40%~70%

Measure equipment

Electrical characteristics measured by MD 37WX-05M or equivalent.

Crystal cutting type

The crystal is using AT CUT (thickness shear mode).

Unit Weight:

0.013±0.002 g/pcs

	Parameters	Symbol	Electrical Spec.				Notes
			Min.	Typ.	Max.	Units	
1	Nominal Frequency	-		40.000000		MHz	-
2	Frequency Stability	-		±40		ppm	
3	Operating Temperature	Topr	-40	25	85	℃	-
4	Storage Temperature	Tstg	-55	~	125	℃	-
5	Supply Voltage	VDD		3.3 ±10%		V	-
6	Input Current	Icc	-	-	5	mA	-
7	Enable Control	-		Yes		-	Pad 1
8	Output Load : CMOS	CL		15		pF	-
9	Output Voltage High	VoH	90%Vdd	-	-	V	-
10	Output Voltage Low	VoL	-	-	10%Vdd	V	-
11	Rise Time	Tr	-	-	5	ns	10%→90%VDD Level
12	Fall Time	Tf	-	-	5	ns	90%→10%VDD Level
13	Symmetry (Duty ratio)	TH/T	45	~	55	%	-
14	Start-up Time	Tosc	-	-	10	ms	-
15	Enable Voltage High	Vhi	70%Vdd	-	-	V	-
16	Disable Voltage Low	Vlo	-	-	30%Vdd	V	-
17	Aging	-		±3		ppm/yr.	1st. Year at 25℃
18	Output Disable Delay Time	T off	-	-	150	μS	-
19	Output Enable Delay Time	T on	-	-	150	μS	-
20	RMS Phase Jitter	-	-	-	1	ps	Integrated from 12KHz to 20MHz

TXC confidential and proprietary document

■ DIMENSIONS

Unit:mm

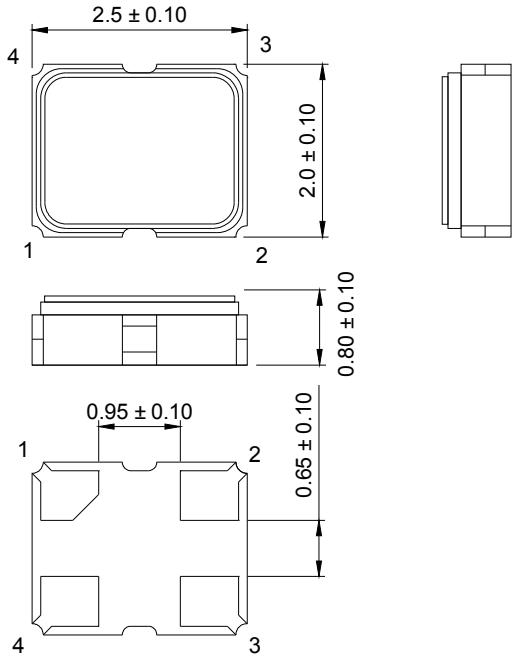

PAD FUNCTION:
1: ENABLE/DISABLE
2: GND
3: OUTPUT
4: VDD

Suggested Layout

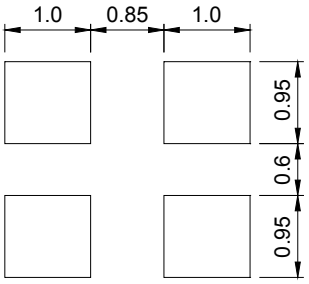

■ MARKING

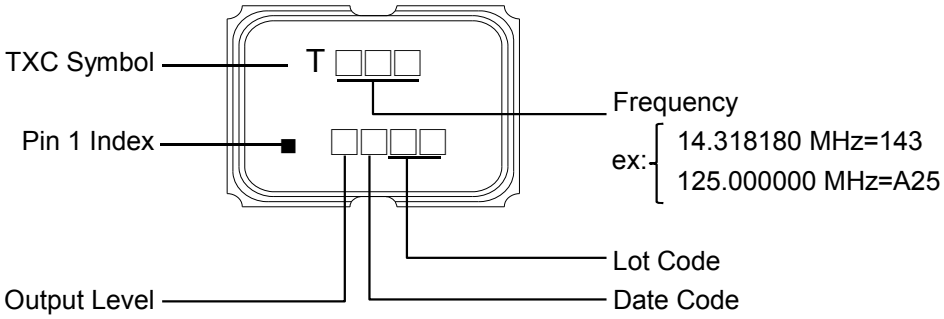

Output Level:

V_{DD}(V)	5.00	3.30	2.80	2.50	1.80	2.90	3.00	2.85	2.60	2.55	2.00	1.50	2.70	3.40	1.90	1.20	1.00
CODE	A	B	C	D	E	F	G	H	J	K	L	M	N	P	Q	R	S

Date Code:

YEAR \ MONTH	JAN	FEB	MAR	APR	MAY	JUN	JUL	AUG	SEP	OCT	NOV	DEC
2005	2009	2013	2017	2021	A	B	C	D	E	F	G	H	J	K	L	M
2006	2010	2014	2018	2022	N	P	Q	R	S	T	U	V	W	X	Y	Z
2007	2011	2015	2019	2023	a	b	c	d	e	f	g	h	j	k	l	m
2008	2012	2016	2020	2024	n	p	q	r	s	t	u	v	w	x	y	z

*This date code will be cycled every four years

Production location:Taiwan

TXC confidential and proprietary document

■ TEST DIAGRAM

Pad 1 : Tri-State control

Pad 1(OE)	Pad 3 (Output)	Oscillator
High (or open)	OSC out	Normal operation
Low	High impedance	Stop oscillation

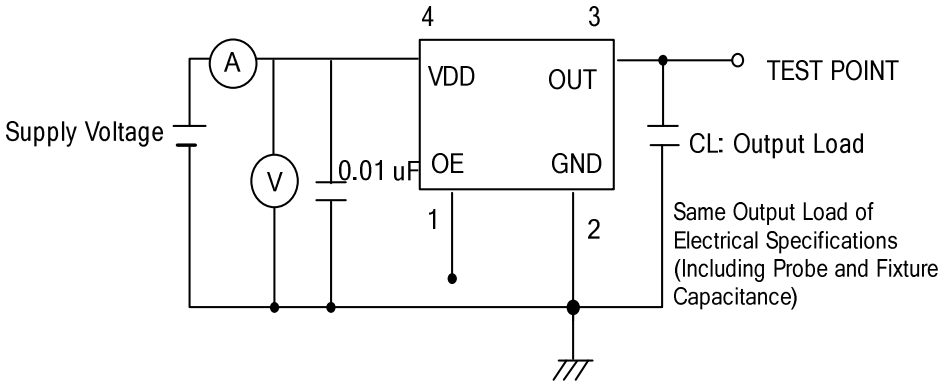

■ WAVEFORM CONDITIONS

Waveform measurement system should have a min. bandwidth of 5 times the frequency being tested.

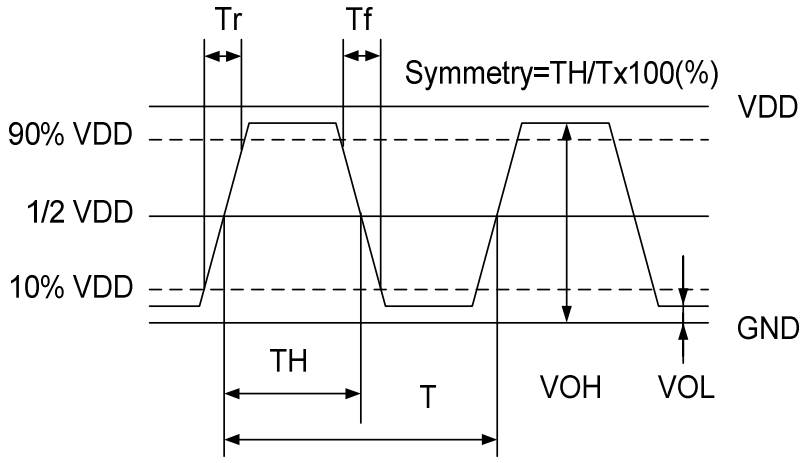

TXC confidential and proprietary document

■ OUTPUT ENABLE / DISABLE DELAY

The following figure shows the oscillator timing during normal operation . Note that when the device is in standby, the oscillator stops. When standby is released, the oscillator starts and stable oscillator output occurs after a short delay.

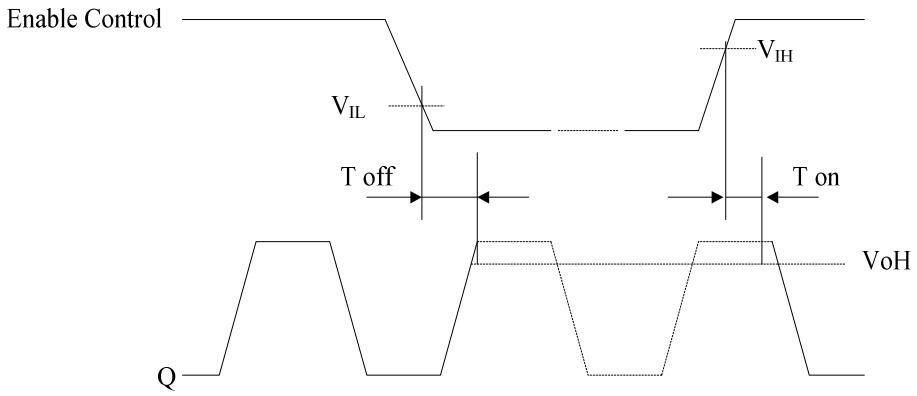

■ SUGGESTED REFLOW PROFILE

Total time : 600 sec. Max.

Solder melting point :220 ℃

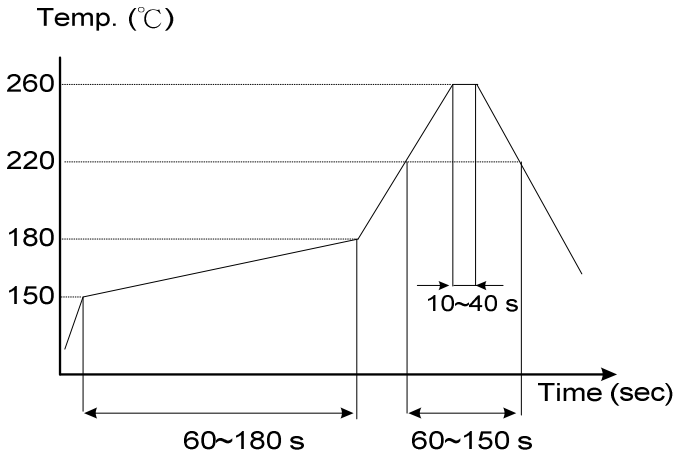

TXC confidential and proprietary document

■ STRUCTURE ILLUSTRATION

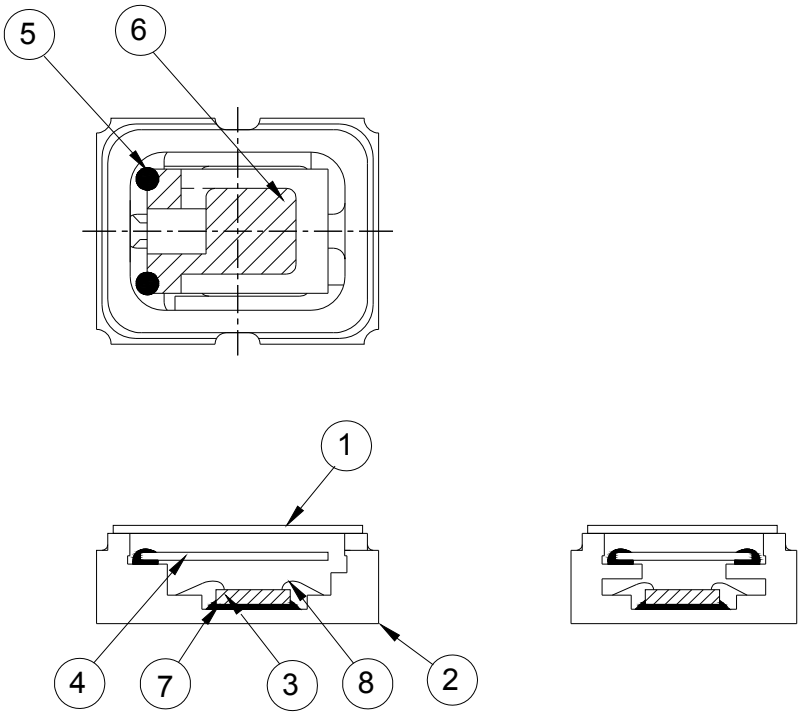

NO	COMPONENTS	MATERIALS	FINISH/SPECIFICATIONS
1	Lid	Kovar (Fe/Co/Ni)	-
2	Base (Package)	Ceramic (Al_2O_3) + Kovar (Fe/Co/Ni)+ Pad(Au)	-
3	IC chip	-	-
4	Crystal blank	SiO_2	-
5	Conductive adhesive	Ag	Silicon resin
6	Electrode	Noble Metal	-
7	Die attached	Conductive	Epoxy resin
8	Bonding wire	Au	Pad 1 options : NC is 5 wires , EN is 6 wires.

TXC confidential and proprietary document

■ PACKING

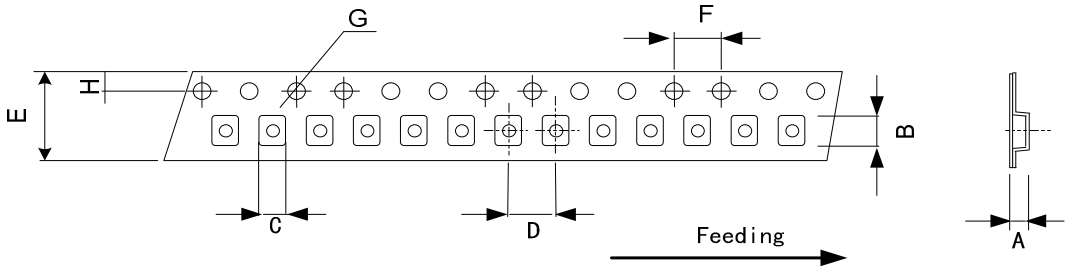

	A	B	C	D	E	F	G	H	
DIMENSIONS	1.15 ±0.05	2.70 ±0.05	2.25 ±0.05	4.00 ±0.10	8.00 ±0.20	4.00 ±0.10	1.55 ±0.05	1.75 ±0.10	(UNIT:mm)

REMARK :

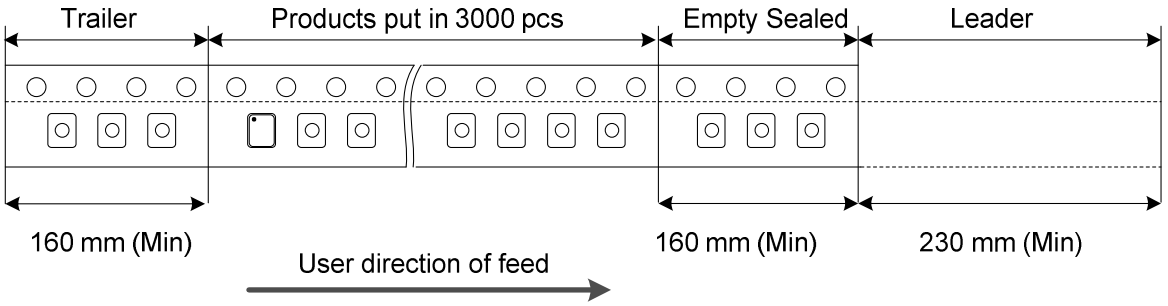

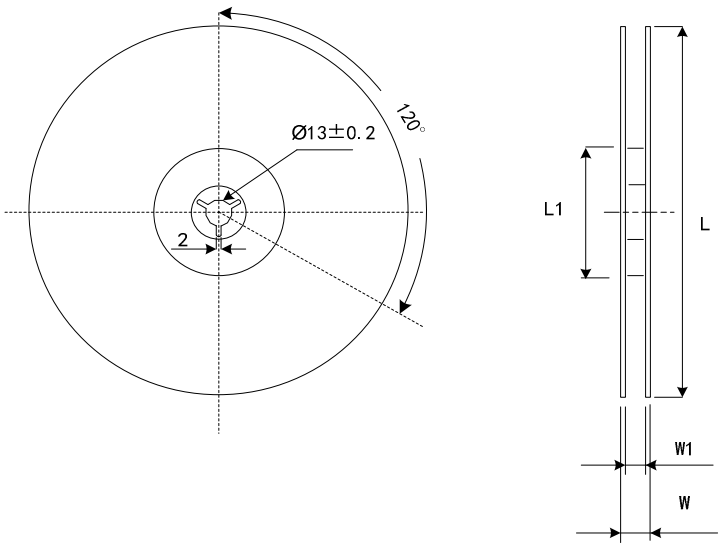

	L	L1	W	W1	
DIMENSIONS	180 0/-3	60 +1/0	11.4 ±0.1	9 ±0.3	Standard Reel Quantity is 3,000 pcs per reel (UNIT:mm)

TXC confidential and proprietary document

■ RELIABILITY SPECIFICATIONS (AEC-Q100 Compliant)

1.Mechanical Endurance

No.	Test Item	Test Methods	REF. DOC
1.1	Drop Test	120 cm Height,6 times on stainless plate.	AEC-Q100
1.2	Mechanical Shock	Device are shocked to half sine wave (1500 G) three mutually perpendicular axes each 3 times. 0.5m sec. duration time	JEDEC JESD22-B104
1.3	Vibration	Frequency range : 10 ~ 2000 Hz Amplitude : 1.52 mm Acceleration : 50 g Sweep speed : 5 minutes/cycle Direction : X,Y,Z 3 directions Duration : 20 minutes/each direction	JESD22-B103
1.4	Gross Leak	Standard Sample For Automatic Gross Leak Detector. Test Pressure: 2kg / cm^2	MIL-STD-883
1.5	Fine Leak	Helium Bombing : 4.5 Kgf / cm^2 for 2 hours	MIL-STD-883
1.6	Solderability	Temperature : 245 ℃ ± 5℃ Immersing depth : 0.5 mm minimum Immersion time : 5 ± 1 seconds Flux Rosin resin : methyl alcohol solvent (1 : 4)	JEDEC JESD22-B102

2.Environmental Endurance

No.	Test Item	Test Methods	REF. DOC
2.1	High Temp. Storage	Temperature : +200℃ ± 3℃ Duration : 72 hours	JESD22-A103
2.2	High Temp. Operation Life	Temperature : +105℃ ± 3℃ Duration : 408 hours	JESD22-A108
2.3	Temperature Cycling	Temperature range : -50℃~125℃ Dwell time : 15 minutes Test cycles : 500 cycles	JESD22-A104
2.4	High Temp＆Humidity	Temperature : 85℃ ± 3℃ Humidity : RH 85% Duration : 1000 hours	JESD22-A101
2.5	Autoclave	Temperature : 121℃ ± 3℃ Humidity : RH 100% Pressure : 2 bar Duration : 96 hours	JESD22-A102

TXC confidential and proprietary document