TXC CORPORATION

4F ,NO.16 , SEC.0, CHUNG YANG S. RD.,
PEITOU, TAIPEI , TAIWAN, R.O.C.
TEL : (02) 2894-1202 , 2895-2198
FAX : (02) 2894-1206 , 2895-6204

HC-49U PRODUCT SPECIFICATIONS

TXC CORPORATION	TXC P/N **9A06700167**	Doc. No.	Ver. **A**

General Specifications

		Min	TYP.	Max	units
1	Nominal Frequency		6.745800		MHz
2	Mode Of Vibration		Fundamental		
3	Load Capacitance (CL)		20		pF
4	Effective Series Resistance			40	Ohms
5	Shunt Capacitance (C0)			5	pF
6	Motional Capacitance (C1)				fF
7	C0/C1				
8	Calibration TOL. (25°C)	-30		+30	ppm
9	Operation Temp. Range	-20		+70	℃
10	Stability Over Operation Temp. Range	-30		+30	ppm
11	Drive Level		10		uW
12	Insulation Resistance：(at DC 100V)	500			Mohms
13	Spurious ：Search Range(±5000ppm)			-3.5	dB
14	DLD2(0.1~1000uW / set 20 point)			15	Ohms
15	FDLD(0.1~1000uW / set 20 point)			10	ppm
16	Aging	-3		+3	ppm/year
17	Others :				
	*Pb Free Process(Pb<40ppm)				

Making : ■ Laser Marking ☐ Ink Marking ☐ No Marking

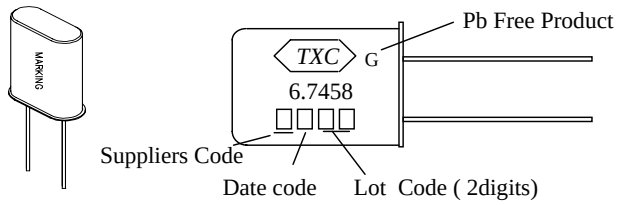

Date code : Unit：mm

year \ month	JAN	FEB	MAR	APR	MAY	JUN	JUL	AUG	SEP	OCT	NOV	DEC
2005	A	B	C	D	E	F	G	H	J	K	L	M
2006	N	P	Q	R	S	T	U	V	W	X	Y	Z
2007	a	b	c	d	e	f	g	h	j	k	l	m
2008	n	p	q	r	s	t	u	v	w	x	y	z

This date code will be cycling four years.

Dimensions： Unit：mm

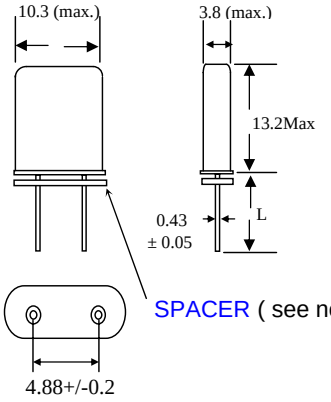

L	Selection
13.2±0.5	■
3.4±0.5	☐
4.0±0.3	☐

Special Requested Specifications

1. All Pb free products must go through the IR re-flow process with260℃±5℃ / 20 second conditions.
2. Machine for Measurement-S&A250B
3. Please provide 20pcs electrical & temperature data for each lot.

Packing Method (Please refer to TXC Standard Package Method)

1 Packing： ☐ Tray (TXC Standard, White color) ☐ Tray (Antistatic Material,___ Color)
☐ Taping On Reel ☐ Taping (Ammo Packing)
■ Antistatic Bag (Pink Color), 200_Pcs/Bag.
☐ Others : Zipper Plastic Bag (Clear), 200 Pcs/Bag,Put In Bubble Bag, 5 Bag/Box.

2 Inner Box： ■ TXC Standard ☐ Others _____

3 Labeling ： ■ The green label with black “G” will be labeled on reel, inner packing box and shipping carton for identification.(Please refer to the packing specification for Pb free parts.)

Inspection Standard and Method

Sampling Plan : MIL - STD -105E Single Sampling

Inspection Item	Specification	Refer To TXC Document	AQL
1. Electrical Characteristics	As General Specificaitons	Electrical Specifications	Maj . : 0.1 % , Min . : 1.0 %
2. Leakage(Gross And Fine)	1 x 10 Exp (-8) atm c.c. / sec Max.	Reliability Specifications	Maj . : 0.01 %
3. Marking	As Specificaitons	Marking Specifications	Maj . : 0.01 %
4. Appearance Check	As Golden Sample	Appearance Specifications	Maj . : 0.1 % , Min . : 1.0 %

Engineering Change Records

Revision	Description of Change	Issue Date	Approved	Checked	Presented
A	Initial Release	*2005/5/9*	*Ton Hsieh*	Simon Wang	ROGER
B					
C					

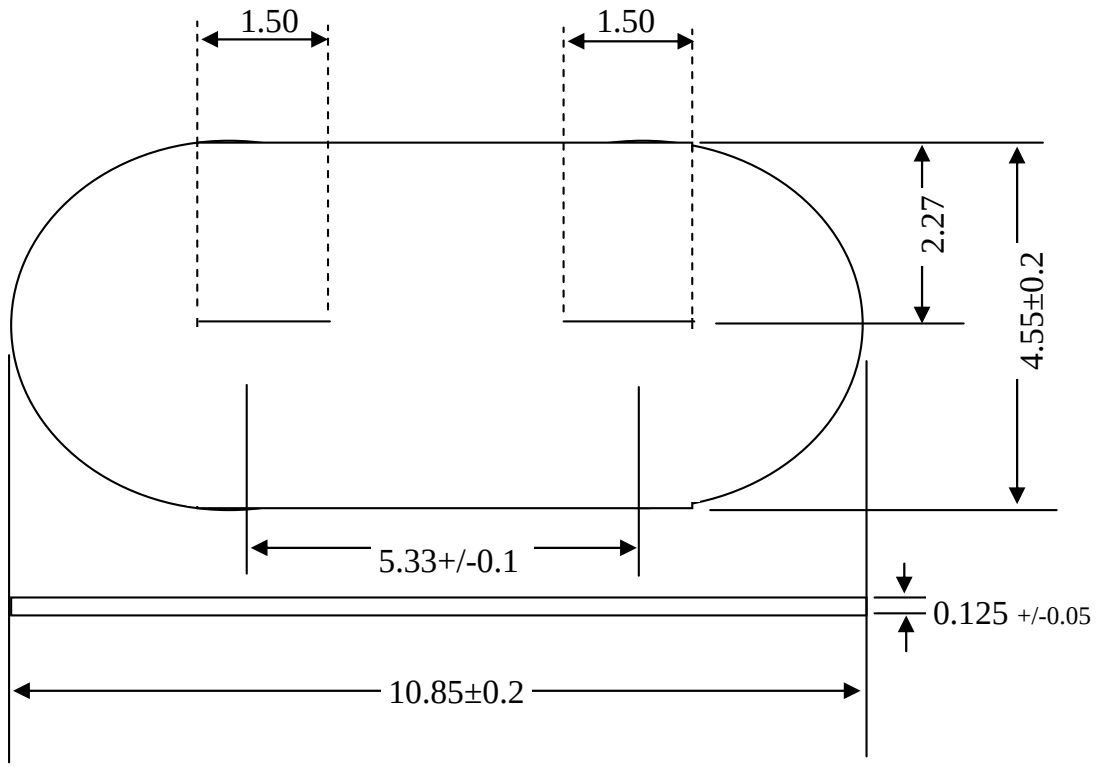

Material	Teflon Glass Cloth
Melting Temperature	260 °C Min.
Insulation	$1.0x10^{14}$ Ohms.cm Min.
Surface	Smooth
Unsmooth Edge	0.1mm max.
Color	Brown

Temperature Use Range : -73 °C ~304 °C

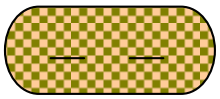

REV.	B	**UNIT :**	mm	TITLE : 2106000571 (S7)
MATELAL	PTFE GLASS CLOTH			INSULATOR (49US TYPE)
DRAWN	*Simon Wang*	**SCALE**		
CHECKED	*Hero*			**DRAWING No. SP-A0127-01**
APPROVED	*Kenny Lu*			**TXC Co., LTD.**