TXC CORPORATION

HC-49S SMD PRODUCT SPECIFICATIONS

***DATE:** 2003/12/17 ***FILE NUMBER:**

I. PART NUMBER: **6C14300157** **VER:** A

II. OPERATION CHARACTERISTICS

* 1. NORMINAL FREQUENCY: 14.318180 MHZ
* 2. MODE OF VIBRATION: ■ FUND □ 3rd □ 5TH
* 3. LOAD CAPACITANCE (CL): 18 pF
* 4. EFFECTIVE SERIES RESISTANCE: **25** Ω(MAX)
* 5. SHUNT CAPACITANCE (C0): 7 pF MAX. or pF to pF
* 6. CALIBRATION TOL. (25℃): ± 30 ppm
* 7. OPERATION TEMP. RANGE: -10 ℃～ + 60 ℃
* 8. STABILITY OVER OPERATION TEMP. RANGE: ± 30 ppm(MAX.)
* 9. DRIVE LEVEL: 1 uW(MAX.)
10. INSULATION RESISTANCE: 500MΩMin. at DC 100V.

III. OTHER:

11. UNWANTED MODES: N/A
12. LONG TERM STABILITY :± 3.0ppm / Year
*13. MOTIONAL CAPACITANCE(CM): fF Min
*14.C0/CM:
15.OTHERS: Taping Reel(24*12)

IV. MARKING: UNIT: mm

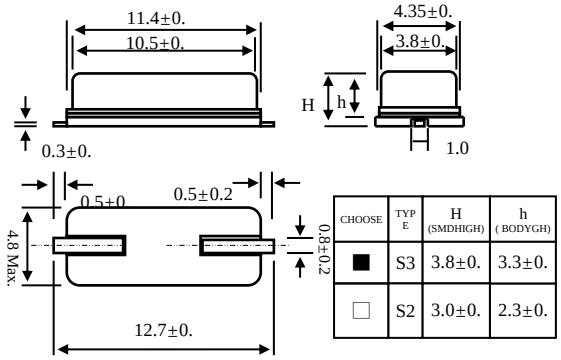

CHOOSE	TYPE	H (SMDHIGH)	h (BODYGH)
■	S3	3.8±0.	3.3±0.
□	S2	3.0±0.	2.3±0.

V. PACKING METHOD :

1. PACKING: □ TRAY (TXC STANDARD, White color) □ TRAY (Antistatic Material,___ Color)
■ TAPING ON REEL □ TAPING (AMMO PACKING)
□ ANTISTATIC BAG (____ Color),_____Pcs/Bag.
□ ZIPPER PLASTIC BAG (Clear), ___ Pcs/Bag, ___ Bag/Bo □ OTHERS : _____

2. INNER BOX : ■ TXC STANDARD □ OTHERS _____

VI. RELIABILITY SPECIFICATIONS:(OTHERS REFER TO TXC QA SPEC.)

1. HERMETIC SEAL:LESS THAN 1×10^{-8} atm cc/sec.
2. MARKING PERMANENCY : Per MIL-STD-202,Method 215.
3. DROP TEST: Free dropping 3times, at 50cm height, drop on 3cm hard wood.
4. SOLDERABILITY: 95% coverage by using 63/37 solder at 245℃ for 5 sec. dipping.
after immersion in Alpha 611 flux for 5sec.

***REMARK: *** □ NO MARKING ■ MARKING
TXC
14.3*5*F

REVISION AND ENGINEERING CHANGE RECORDS

Ver.	Description of Change	Date	Approved	Check	Present
A	INITIAL RELEASED	2003/12/17			
			TON	SIMON	柯淑貞

A	INITIAL RELEASED	1999/12/6

AA	SPEC CHANGE	2000/6/9
AB	OPERATION CHARACTERISTICS CHANGE	2001/6/1

依頻率訂定一般電氣規格要求如下: (註 : 如規格另有特殊規定，則依"外製成品49S"規格書）

1.) FDLD & DLD2規格 如下:

Frequency Range	FDLD製規	DLD2製規	FQC / IQC DLD2規格
Fundamental	(ppm) Max.	(Ohms) Max.	(Ohms) Max.
4MHz(不含)以下	10	20	25 Ω
4MHz(含) ~ 8MHZ(含)	10	15	20 Ω
8MHz(不含)~18MHz(含)	10	10	15 Ω
18MHz(不含)~以上	15	10	15 Ω
3rd Overtone			
24MHz~100MHz	10	20	30 Ω
			(FDLD 允收: 15ppm max.)

2.) DLD POWER 至少設定 0.1、1、 10、 50、 100 uW

3.) Spurious規格修訂如下:

Frequency Range	Spurious spec.
Fundamental	Search Range(-5000~+5000ppm)
20MHz(含)以下	-3.5 dB Max.
20MHz(含)以上	-3.5 dB Max.
3rd Overtone	
24MHz~60MHz	-3.5 dB Max.
60MHz~100MHz	-3.5 dB Max.

4.) TXC IQC 抽樣檢驗DLD2依MIL-STD-105E Level Ⅱ& Single sampling plans ：

a.)2003/4/24~6/30 依照AQL 0.4允收。

b.)2003/7/1 起依照AQL 0.1允收。

Verion	B	Revised		Prepared by	Shu-Chen Ko
Date	2003/8/24	DCC. No.	製品管理辦法A.1	Check by	Simon Wang
Issued by	M.E.Department	Hold Type	HC-49/S	Approved by	Joseph

(A) Tape and reel configuration:

(a) Emboss taping configuration. (per EIA-481-2)

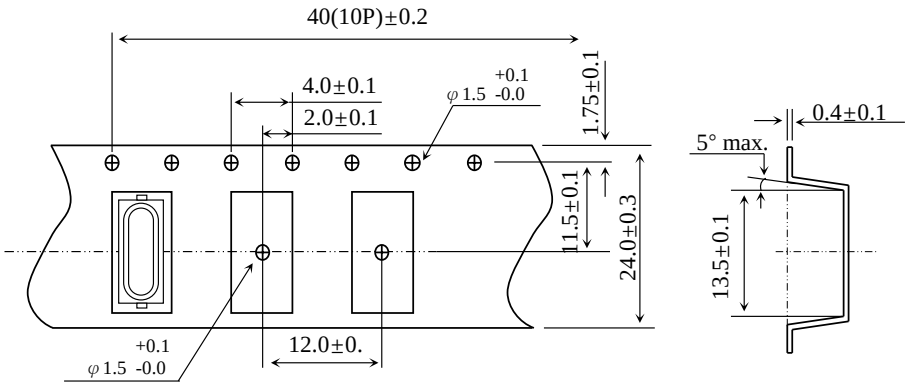

TYP.	H (+/-0.1)
S3	4.2
S2	3.3

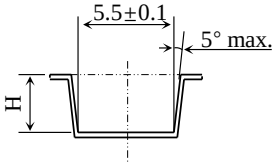

(b) Reel configuration.

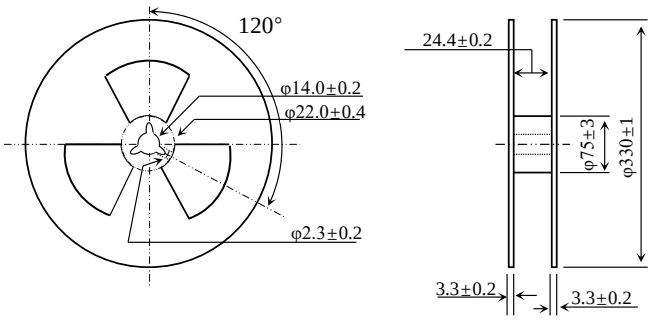

(B) Packing:

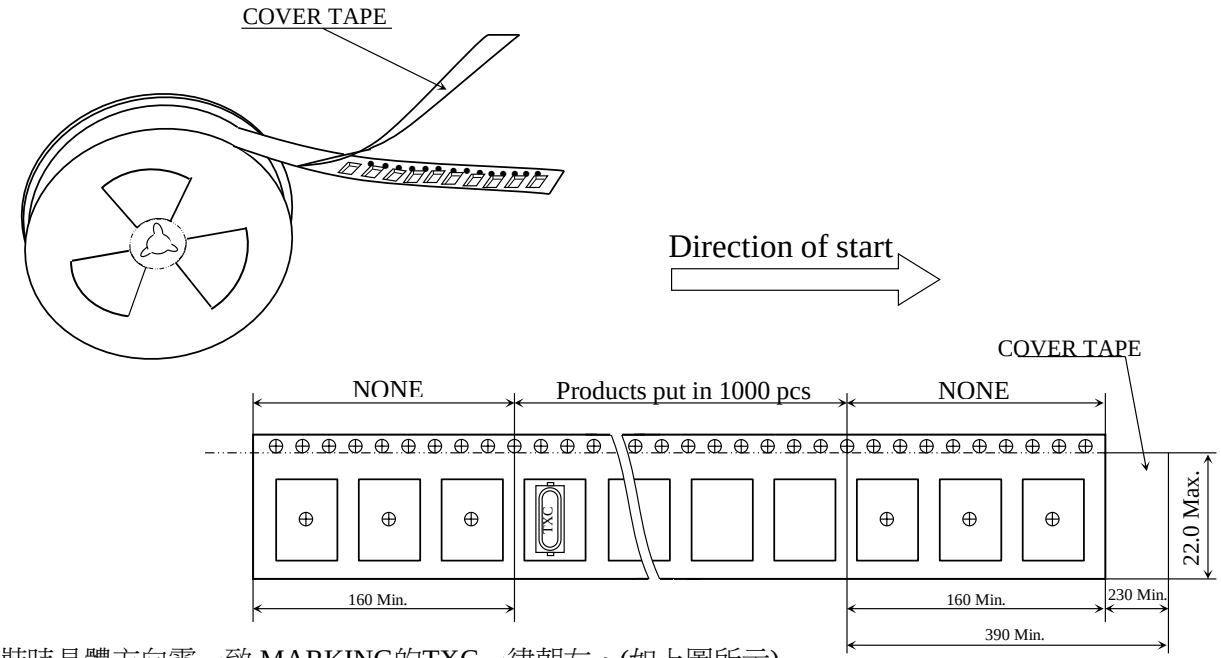

*包裝時晶體方向需一致,MARKING的TXC一律朝左。(如上圖所示)

Verion	B	Revised records	N/A	*All units used mm	
Date	2003/8/24			Prepared by	SHU-CHEN KO
Issued by	M.E.Department	Hold Type	HC-49/S SMD	Approved by	SIMON WANG