TXC CORPORATION

HC-49S SMD PRODUCT SPECIFICATIONS

***DATE:** 2001/10/25 ***FILE NUMBER:**

I. PART NUMBER: **6C04000202** **VER:** A

II. OPERATION CHARACTERISTICS

* 1. NORMINAL FREQUENCY: 4.000000 MHZ
* 2. MODE OF VIBRATION: ■ FUND □ 3rd □ 5TH
* 3. LOAD CAPACITANCE (CL): 12 pF
* 4. EFFECTIVE SERIES RESISTANCE 100 Ω(MAX)
* 5. SHUNT CAPACITANCE (C0): 5 pF MAX. or pF to pF
* 6. CALIBRATION TOL. (25℃): ± 10 ppm
* 7. OPERATION TEMP. RANGE: -25 ℃～ + 85 ℃
* 8. STABILITY OVER OPERATON TEMP. RANGE: ± 25 ppm(MAX.)
* 9. DRIVE LEVEL: 10 uW(MAX.)
10. INSULATION RESISTANCE: 500MΩMin. at DC 100V.

III. OTHER:

11. UNWANTED MODES: N/A
12. LONG TERM STABILITY :± 3.0ppm / Year
*13. MOTIONAL CAPACITANCE(CM): fF Min
*14.C0/CM:
15.OTHERS: Taping Reel(24*12)

IV. MARKING: UNIT: mm

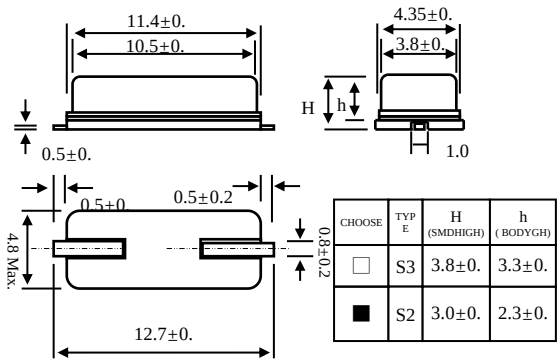

CHOOSE	TYPE	H (SMDHIGH)	h (BODYGH)
□	S3	3.8±0.	3.3±0.
■	S2	3.0±0.	2.3±0.

V. PACKING METHOD :

1. PACKING: □ TRAY (TXC STANDARD, White color) □ TRAY (Antistatic Material,___ Color)
■ TAPING ON REEL □ TAPING (AMMO PACKING)
□ ANTISTATIC BAG (____ Color),_____Pcs/Bag.
□ ZIPPER PLASTIC BAG (Clear), ___ Pcs/Bag, ___ Bag/Bo □ OTHERS : _____

2. INNER BOX : ■ TXC STANDARD □ OTHERS _____

VI. RELIABILITY SPECIFICATIONS:(OTHERS REFER TO TXC QA SPEC.)

1. HERMETIC SEAL:LESS THAN 1×10^{-8} atm cc/sec.
2. MARKING PERMANENCY : Per MIL-STD-202,Method 215.
3. DROP TEST: Free dropping 3times, at 50cm height, drop on 3cm hard wood.
4. SOLDERABILITY: 95% coverage by using 63/37 solder at 245℃ for 5 sec. dipping.
after immersion in Alpha 611 flux for 5sec.

***REMARK: *** □ NO MARKING ■ MARKING
TXC
4.00*2*F

REVISION AND ENGINEERING CHANGE RECORDS

Ver.	Description of Change	Date	Approved	Check	Present
A	INITIAL RELEASED	2001/10/25			
B					
C			江盛鋐	王宣慶	柯淑貞

SPECIFICATIONS

(A) Tape and reel configuration:

(a) Emboss taping configuration. (per EIA-481-2)

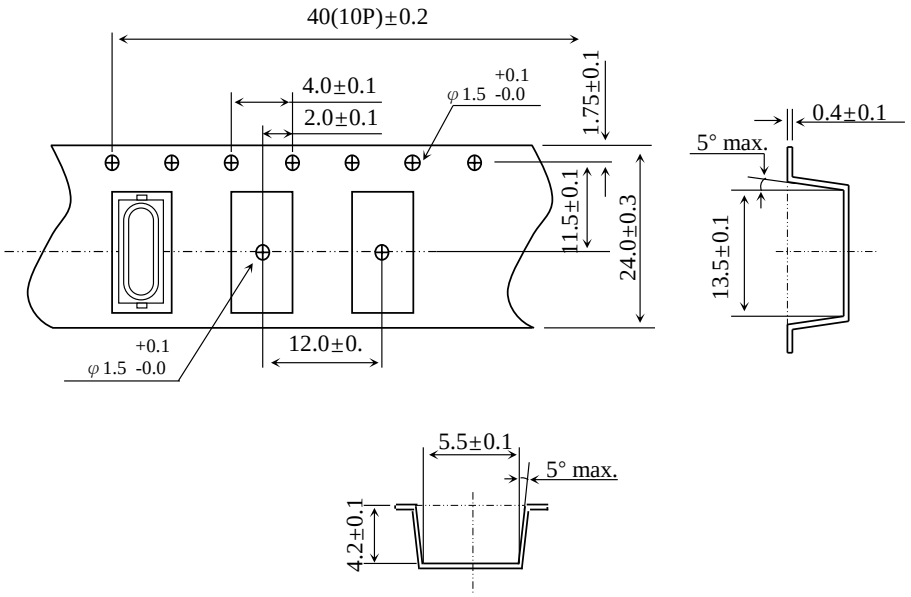

(b) Reel configuration.

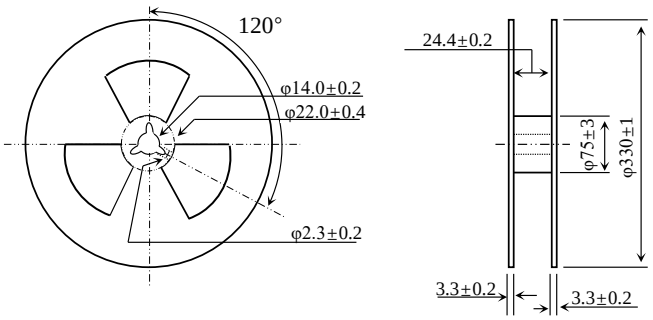

(B) Packing:

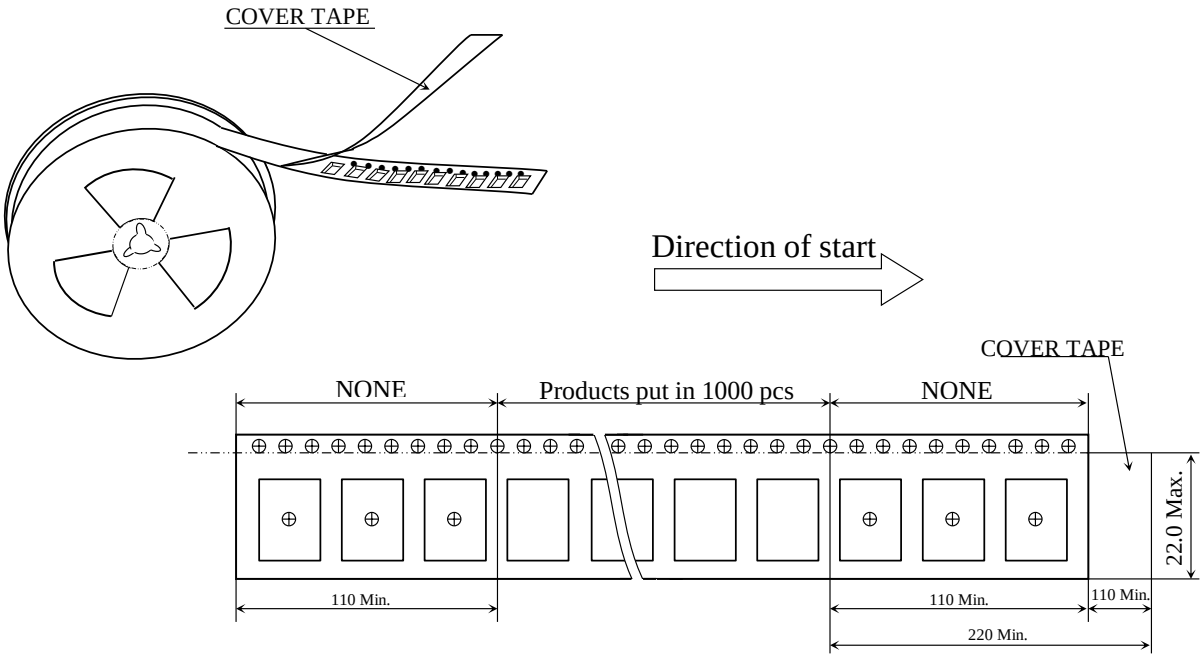

Verion	A	Revised records	N/A	*All units used mm	
Date	2000/4/5			Prepared by	SHU-CHEN KO
Issued by	M.E.Department	Hold Type	HC-49/S SMD	Approved by	SIMON WANG