TXC CORPORATION

HC-49S PRODUCT SPECIFICATIONS

***DATE:** 2004/10/7 ***FILE NUMBER:**

I. PART NUMBER: **6B25000068** **VER:** E

II. OPERATION CHARACTERISTICS

* 1. NORMINAL FREQUENCY: 25.000000 MHZ
* 2. MODE OF VIBRATION: ■ FUND ☐ 3rd ☐ 5TH
* 3. LOAD CAPACITANCE (CL): 20 pF
* 4. EFFECTIVE SERIES RESISTANCE 20 Ω(MAX)
* 5. SHUNT CAPACITANCE (C0): 5 pF MAX. or pF to pF
* 6. CALIBRATION TOL. (25℃): ± 30 ppm
* 7. OPERATION TEMP. RANGE: -10 ℃～ + 70 ℃
* 8. STABILITY OVER OPERATION TEMP. RANGE: ± 30 ppm(MAX.)
* 9. DRIVE LEVEL: 1 uW(MAX.)
10. INSULATION RESISTANCE: 500MΩMin. at DC 100V.

III. OTHER:

*11. UNWANTED MODES: -3dB Max. (-5000~+7000 ppm)
12. LONG TERM STABILITY :± 3ppm / Year
*13. MOTIONAL CAPACITANCE(CM): fF Min
*14.C0/CM:
15.OTHERS: SEE ATTACH PAGE.
*RLD2 < 20 ohms , (set 1 uW into 10 ohms , from 10nw to 250uW with 10 points sweep)

IV. MARKING: UNIT: mm

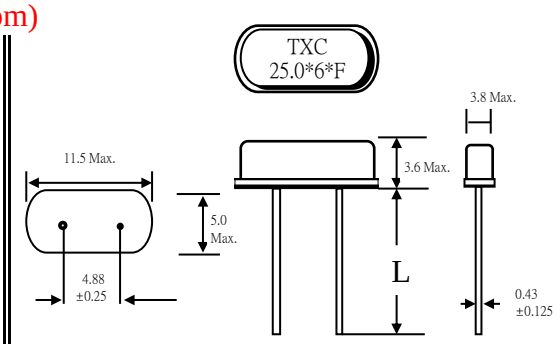

L: 13.2/0.5mm

V. PACKING METHOD :

1. PACKING: ☐ TRAY (TXC STANDARD, White color) ☐ TRAY (Antistatic Material,___ Color)
☐ TAPING ON REEL ☐ TAPING (AMMO PACKING)
☐ ANTISTATIC BAG (____ Color),_____Pcs/Bag.
■ ZIPPER PLASTIC BAG (Clear), 200 Pcs/Bag PUT IN BUBBLE BAG, 5 Bag/Box
☐ OTHERS : _____

2. INNER BOX : ■ TXC STANDARD ☐ OTHERS _____

VI. RELIABILITY SPECIFICATIONS:(OTHERS REFER TO TXC QA SPEC.)

1. HERMETIC SEAL:LESS THAN 1×10^{-8} atm cc/sec.
2. MARKING PERMANENCY : Per MIL-STD-202,Method 215.
3. DROP TEST: Free dropping 3times, at 50cm height, drop on 3cm hard wood.
4. SOLDERABILITY: 95% coverage by using 63/37 solder at 245℃ for 5 sec. dipping. after immersion in Alpha 611 flux for 5sec.

***REMARK: *** ☐ NO MARKING ■ MARKING

REVISION AND ENGINEERING CHANGE RECORDS

Ver.	Description of Change	Date	Approved	Check	Present
C	MODDIFY SPUR. SPECIFICATION	2003/9/23	JOSEPH	SIMON	柯淑貞
D	ADD RLD2 SPEC. (ECN-04P051101)	2004/5/14	TON	SIMON	MARK
E	Chenge RLD2 spec. (DCN-04A0001)	2004/10/7	TON	SIMON	MARK
AA	INITIAL RELEASED	2000/4/26			
AB	"C0" CHANGE	2001/2/23			
AC	DRIVE LEVEL CHANGE	2001/6/5			

A	ADD SPURIOUS	2002/10/31			
B	MODDIFY SPECIFICATION	2003/5/7			

依頻率訂定一般電氣規格要求如下: (註 : 如規格另有特殊規定，則依"外製成品49S"規格書）

1.) FDLD & DLD2規格 如下:

Frequency Range	FDLD製規	DLD2製規	FQC / IQC DLD2規格
Fundamental	(ppm) Max.	(Ohms) Max.	(Ohms) Max.
4MHz(不含)以下	10	20	25 Ω
4MHz(含) ~ 8MHZ(含)	10	15	20 Ω
8MHz(不含)~18MHz(含)	10	10	15 Ω
18MHz(不含)~以上	15	10	15 Ω
3rd Overtone			
24MHz~100MHz	10	20	30 Ω
			(FDLD 允收: 15ppm max.)

2.) DLD POWER 至少設定 0.1、1、 10、 50、 100 uW

3.) Spurious規格修訂如下:

Frequency Range	Spurious spec.
Fundamental	Search Range(-5000~+5000ppm)
20MHz(含)以下	-3.5 dB Max.
20MHz(含)以上	-3.5 dB Max.
3rd Overtone	
24MHz~60MHz	-3.5 dB Max.
60MHz~100MHz	-3.5 dB Max.

4.) TXC IQC 抽樣檢驗DLD2依MIL-STD-105E Level Ⅱ& Single sampling plans ：

a.)2003/4/24~6/30 依照AQL 0.4允收。

b.)2003/7/1 起依照AQL 0.1允收。

PACKAGE SPECIFICATIONS

1.INNER BOX：

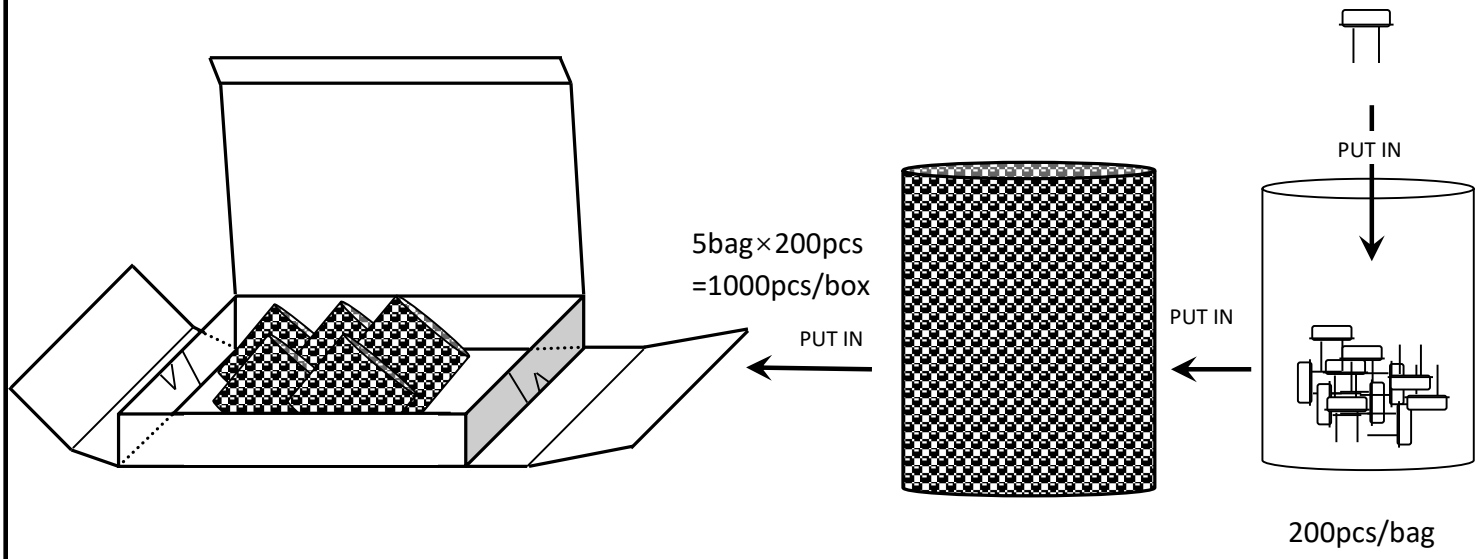

2.LOGO STICKER(CARTON and INNER BOX)

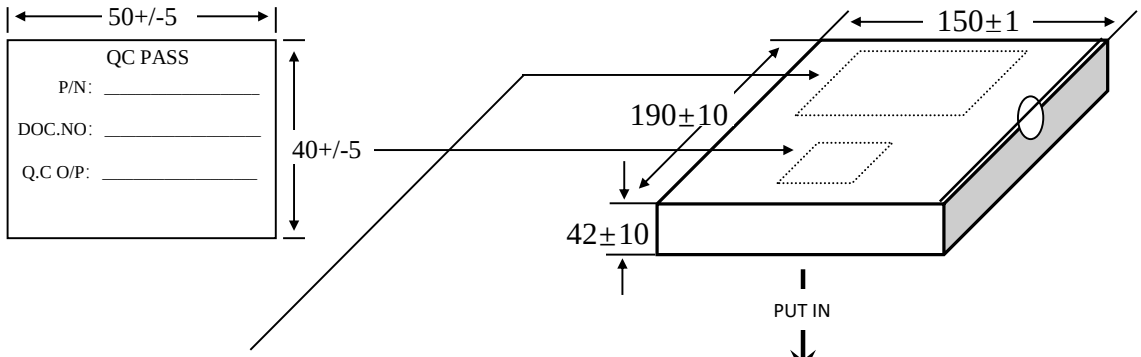

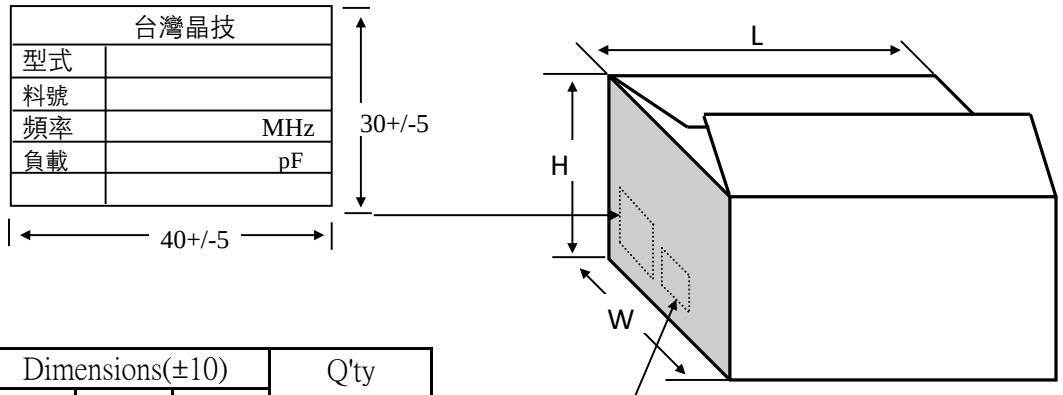

Carton No.	Dimensions(±10) L	W	H	Q'ty pcs/carton
3	420	370	320	32K Max.
4	390	340	290	22K Max.
5	360	310	260	19K Max.
6	330	280	230	12K Max.
7	300	250	200	10K Max.
8	270	220	170	6K Max.

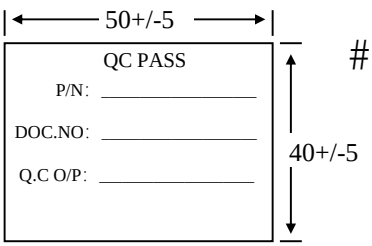

(1) Put in stuff between space.
(2) Tie Up the Carton with 4 Packthreads.

Verion	B	Revised records	For TXC customer only	*All units used mm	
Date	2003/8/24			Prepared by	Shu-Chen Ko
Issued by	M.E.Department	Hold Type	HC-49/S (C)	Approved by	Simon Wang

TXC CORPORATION