TXC CORPORATION

5F, NO. 16, Sec. 2 Chung Yang S Rd., Peitou, Taipei, Taiwan.
TEL : 886-2-2894-1202 , 886-2-2895-2201 FAX : 886-2-2894-1206 , 886-2-2895-6207 http://www.txccorp.com

SPECIFICATION FOR APPROVAL

CUSTOMER : _____

PRODUCT TYPE : SMD LVPECL CXO 7.0*5.0

NOMINAL FREQ. : 125.MHz

TXC P/N : BBA2500001

REVISION : A1

CUSTOMER P/N : _____

PM / SALES : _____

DATE : _____

CUSTOMER SIGNATURE & DATE

: _____

(1) TXC requires one copy returned with signature and title of authorized individual that signifies acceptance of the attached specifications.

(2) Orders received and accepted by TXC after return of signed copy of specification will be produced per these specifications.

(3) Any changes to these specifications must be agreed upon by both parties and new revision of the Product Specification Sheet will be issued.

(4) Any issuance of purchase order prior to consigning back the Approval page of "Specification Sheets" from customers will be regarded as the agreement on the contents of these specifications.

Attachment(s):

- [V] 1. Product Specification Sheet
- [ ] 2. Testing Report(Electrical & Temperature)
- [ ] 3. Reliability Report

RoHS Compliant

TXC CORPORATION

5F, NO. 16, Sec. 2 Chung Yang S Rd., Peitou, Taipei, Taiwan.
TEL : 886-2-2894-1202 , 886-2-2895-2201 FAX : 886-2-2894-1206 , 886-2-2895-6207 http://www.txccorp.com

PRODUCT SPECIFICATION SHEET

CUSTOMER : _____

PRODUCT TYPE : SMD LVPECL CXO 7.0*5.0

NOMINAL FREQ. : 125.MHz

TXC P/N : BBA2500001

REVISION : A1

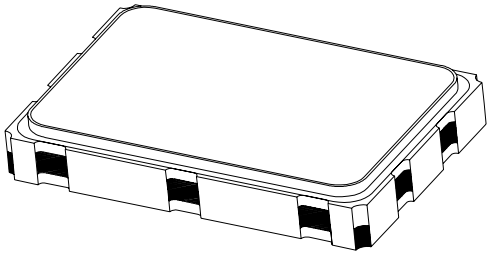

PE/RD	QA	ME
2008/6/30		

NOTE:

(1) Lead Free Products are " Directive 2002/95/EC of The European Parliament of 27 January 2003 on the restriction of the use of certain hazardous substances (RoHS) in electrical and electronic equipment" Compliant (Attachment: SGS Test Report).

(2) Revision "Sx" is for engineering samples only. PE/RD's approval required.

(3) Revision "Ax" is production ready. PE, QA and MFG's approval required.

RoHS Compliant

PRODUCT TYPE: SMD LVPECL CXO 7.0*5.0 P/N: BBA2500001 REVISION: A1

Rev	Revise page	Revise contents	Date	Ref.No.	Reviser
A1	N/A	Initial released	2008/6/30	N/A	Cheese Chiang

■ ELECTRICAL SPECIFICATIONS

Item	Parameters	Condition	Electrical Specifications			
			MIN	TYP	MAX	UNITS
1	Nominal Frequency (Fo)		125.000000			MHz
2	Oscillation Mode		3rd Overtone			
3	Operating Temperature		-40	-	85	℃
4	Storage Temperature		-55	-	125	℃
5	Frequency Stability	Note 1	-50	-	50	PPM
6	Supply Voltage		3.0	3.30	3.6	V
7	Current Consumption	RL=50Ω to VDD-2V	-	-	80	mA
8	Standby Function	Internal Pull Up	YES			
9	Current Consumption(Standby)	OE=Low	-	-	10	uA
10	Output Type		LVPECL			
11	Output Load		50			Ω
12	Output Voltage High		VDD-1.025	-	VDD-0.88	V
13	Output Voltage Low		VDD-1.81	-	VDD-1.62	V
14	Rise Time	20% ~ 80% Output Swing	-	-	1	nS
15	Fall Time	80% ~ 20% Output Swing	-	-	1	nS
16	Symmetry		45	50	55	%
17	Start-up Time	To 90% of Final Amplitude	-	-	10	mS
18	Enable Voltage High (Logic 1)	Note 2	0.7VDD	-	-	V
19	Enable Voltage Low (Logic 0)	Note 2	-	-	0.3VDD	V
20	Output Enable Delay Time		-	-	500	uS
21	Output Disable Delay Time		-	-	500	uS
22	Phase Jitter	12K ~ 20MHz	-	-	1	pS rms

Note 1 Inclusive of frequency tolerance at 25degC, variation over temperature, supply voltage variation, aging and vibration.

Note 2 Output will be enable if OE is Logic 1 or open ; Output will be disable if OE is Logic 0.

Note 3 The standard testing environment except temperature test is 25±5degC, 40%~70% relative humidity.

■ TESTING CIRCUIT

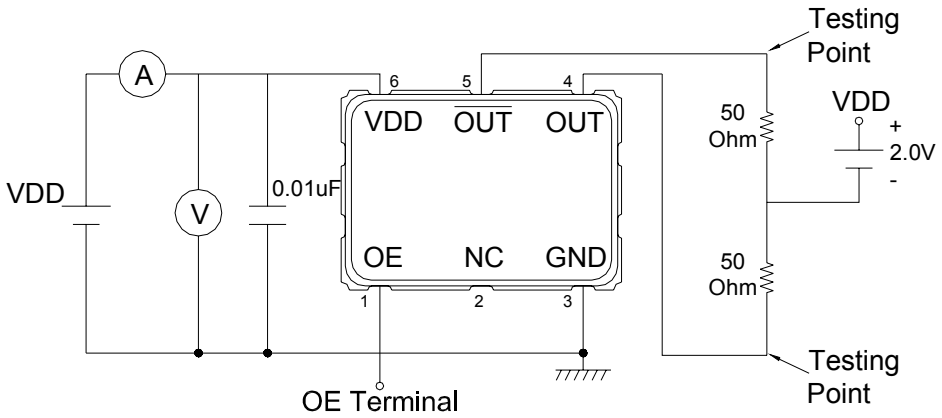

Testing Circuit Note:

1) Above testing circuits cover all the specfications except temperature test & Jitter measurement.
2) All the testing equipments are 50Ohm terminal.
3) OE terminal is open connection except OE function test.

■ WAVEFORM CONDITONS

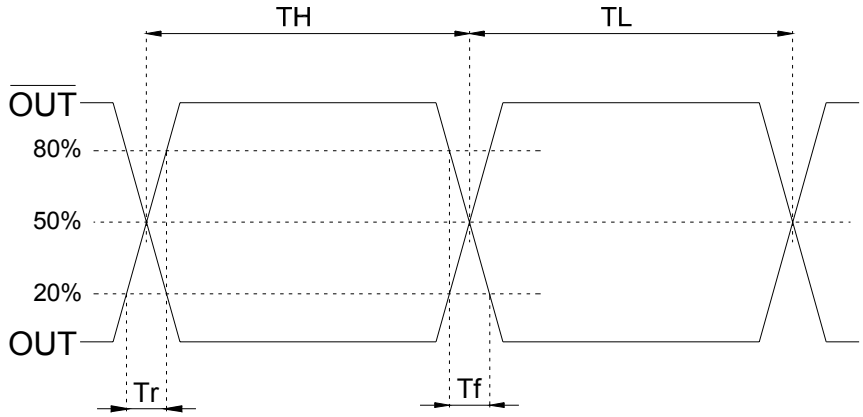

■ DIMENSIONS

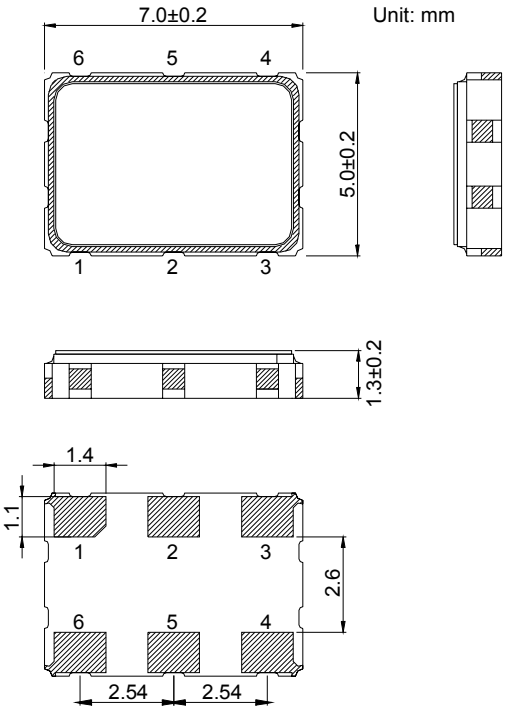

※ Pad dimension tolerance ±0.2 mm

Pin Function:

1. OE
2. NC
3. GND
4. OUT
5. $\overline{OUT}$
6. VDD

Land Pattern:

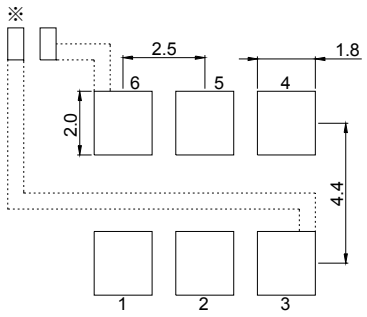

※ Power Supply Decoupling Capacitor is Required.

※ Pad dimension tolerance ±0.2 mm

■ SUGGESTED REFLOW PROFILE

Tota Time: 200 Sec. Max.
Solder Melting Point: 220 °C

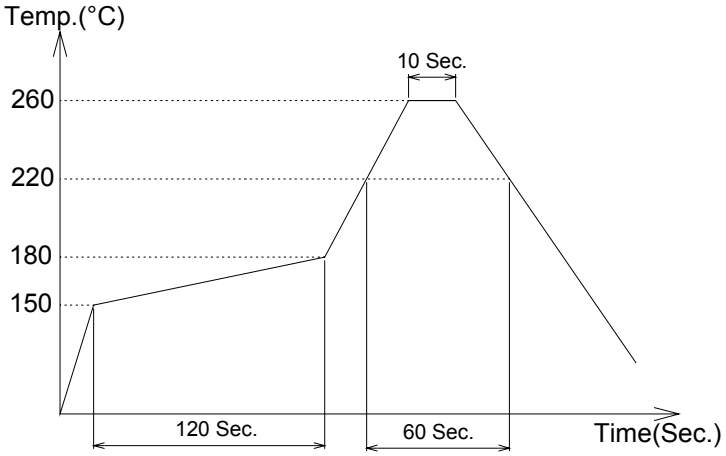

■ MARKING

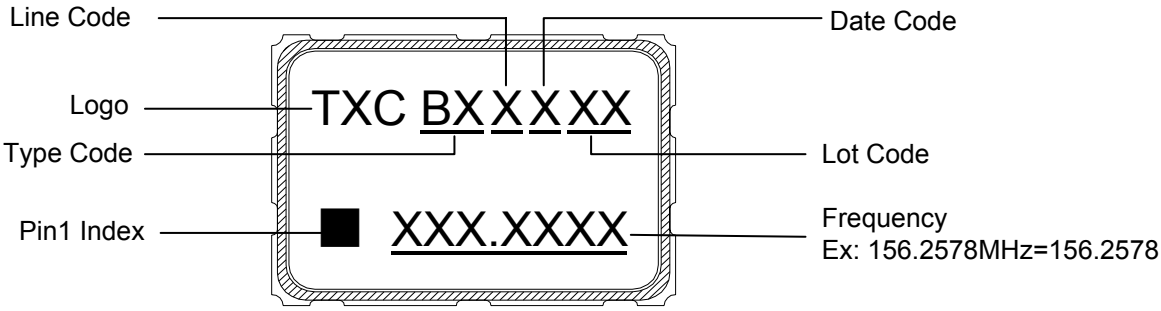

DATE CODE

YEAR \ MONTH				JAN	FEB	MAR	APR	MAY	JUN	JUL	AUG	SEP	OCT	NOV	DEC
2005	2009	2013	2017	A	B	C	D	E	F	G	H	J	K	L	M
2006	2010	2014	2018	N	P	Q	R	S	T	U	V	W	X	Y	Z
2007	2011	2015	2019	a	b	c	d	e	f	g	h	j	k	l	m
2008	2012	2016	2020	n	p	q	r	s	t	u	v	w	x	y	z

* This date code will be cycled every four years.

TYPE CODE

Oscillation mode	Fundamental	3rd Overtone	PLL	Multiplier
Code	BA	BB	BC	BD

■ PACKING : (EIA-481-2)

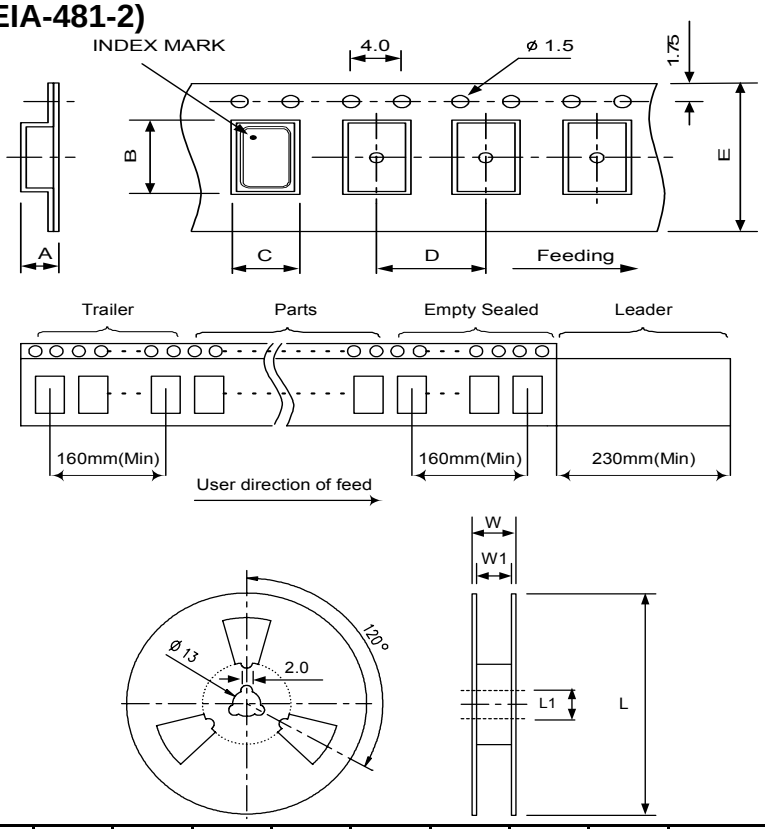

Unit: mm

DIMENSIONS	A	B	C	D	E	L	L1	W	W1	Standard Reel Quantity is 1,000 pcs per reel
	2.00	7.90	5.45	8.00	16.0	180.0	13.0	20.5	16.0	

■ WEIGHT

0.149±0.001 g/pcs

■ STRUCTURE ILLUSTRATION

Crystal Enclosure Seal: Seam Welding
Crystal Enclosure Medium: Nitrogen

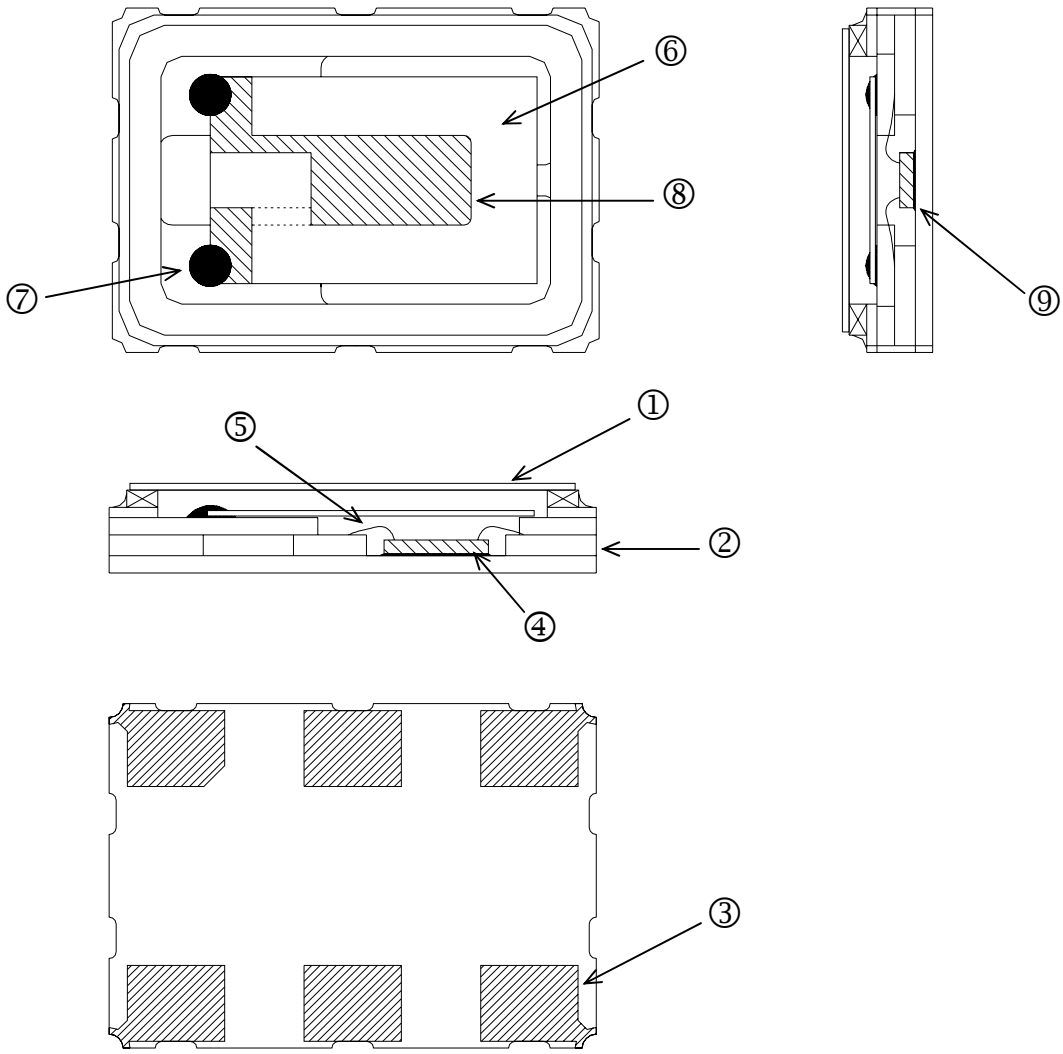

No.	COMPONENTS	MATERIALS	Q'TY	FINISH/SPECIFICATIONS
1	Lid	Kovar(Fe-Ni-Co)	1	-
2	Base(Package)	Ceramic (Al_2O_3)	1	-
3	Pad	Au	6	Tungsten Metalize + Ni Plating + Au Plating
4	IC Chip	Si	1	-
5	Bonding Wire	Au	-	-
6	Crystal Blank	SiO_2	1	-
7	Conductive Adhesive	Ag	4	Silicon Resin
8	Electrode	Noble Metal	2	-
9	Conductive Adhesive	Ag	1	Epoxy Resin

■ RELIABILITY SPECIFICATIONS

1. Mechanical Endurance

No.	Test Item	Test Methods		REF. DOC
1.1	Drop Test	75 cm height, fall freely onto concrete floor 3 times.		JIS C6701
1.2	Mechanical Shock	Device are shocked to half sine wave (1000 G) three mutually perpendicular axes each 3 times. 0.5m sec. duration time.		MIL-STD-202F
1.3	Vibration	Frequency range Amplitude Sweep time Perpendicular axes each test	10 ~ 2000 Hz 1.52 mm 20 minutes 4 hours (Total test time 12 hrs)	MIL-STD-883E
1.4	Gross Leak	Standard Sample For Automatic Gross Leak Detector. Test Pressure: 2Kg / cm^2		MIL-STD-883E
1.5	Fine Leak	Pre-condition - Helium Bomging 4.5 Kgf / cm^2 for 2 hrs Tested by mass-spectrumeter		MIL-STD-883E
1.6	Solderability	Temperature Immersing depth Immersion time Flux	245 **℃** ± 5**℃** 0.5 mm minimum 5 ± 1 seconds Rosin resin methyl alcohol solvent (1 : 4)	MIL-STD-883E

2. Environmental Endurance

No.	Test Item	Test Methods		REF. DOC
2.1	Resistance to Soldering Heat	Pre-heat temperature Pre-heat time Test temperature Test time	125 **℃** 60 ~ 120 sec. 260 ± 5 **℃** 10 ± 1 sec.	MIL-STD-202F
2.2	High Temp. Storage	+125 ℃ ± 3 ℃ for 1000 hours		MIL-STD-883E
2.3	Low Temp. Storage	-40 ℃ ± 3 ℃ for 1000 hours		
2.4	Thermal Shock (Air to Air)	Total 100 cycles of the following temperature cycle 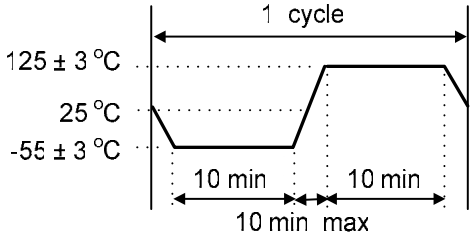		MIL-STD-883E
2.5	Pressure Cooker Test	120 ± 3**℃**, RH100%, 2 bar, for 240 hours		JESD22-A102-C
2.6	High Temp & Humidity	85**℃** ± 3**℃**, RH 85% , 1000 hours		JIS C5023
2.7	Aging	85**℃** ± 3**℃**, Voltage input by specification, 1000 Hrs		JIS C6701