INFORMATION

PRODUCT No. : **X1E000021015400**

MODEL : **TSX-3225**

INFO. No. : **A13-968-1B**

DATE : **Jan. 9. 2014**

SEIKO EPSON CORPORATION

8548 Naka-minowa
Minowa-machi Kamiina-gun
Nagano-ken
399-4696 Japan

INTRODUCTION

1. The contents is subject to change without notice.
   Please exchange the specification sheets regarding
   the product's warranty.

2. This sheet is not intended to guarantee or provide
   an approval of implementation of industrial patents.

3. We have prepared this sheet as carefully as possible.
   If you find it incomplete or unsatisfactory in any
   respect, We would welcome your comments.

This product complies with RoHS Directive.

This Product supplied (and any technical information furnished, if any) by Seiko Epson Corporation shall not be used for the development and manufacture of weapon of mass destruction or for other military purposes. Making available such products and technology to any third party who may use such products or technologies for the said purposes are also prohibited.

This product listed here is designed as components or parts for electronics equipment in general consumer use. We do not expect that any of these products would be incorporated or otherwise used as a component or part for the equipment, which requires an extra high reliability, such as satellite, rocket and other space systems, and medical equipment, the functional purpose of which is to keep life.

Product No. / Model

The product No. of this crystal unit is X1E000021015400.
The model is TSX-3225.

Contents

Item No.	Item	Page
[1]	Absolute maximum ratings	2
[2]	Operating range	2
[3]	Electrical characteristics	2
[4]	Environmental and mechanical characteristics	3
[5]	Dimensions and circuit	4
[6]	Recommended soldering pattern and marking layout	5
[7]	Notes	6

MSL

MSL level 1

[1] Absolute maximum ratings

No.	Parameter	Symbol	Rating value	Note
1	Storage temperature range	T_{stg}	-40 °C to +125 °C	Frequency aging depends on the environmental characteristic specification.

[2] Operating range

No.	Parameter	Symbol	Value			unit	Note
			Min.	Typ.	Max.		
1	Operating temperature range	T_{use}	-20		+75	°C	Frequency aging depends on the Environmental characteristic specification.
2	Level of drive	DL	-	10	200	μW	Recommended Level of drive (1 to 100 μW)

[3] Electrical characteristics

No.	Parameter	Symbol	Standard	Conditions
1	Nominal frequency	f	27 MHz	Fundamental
2	Frequency tolerance	f_tol	$\pm 10 \times 10^{-6}$	CL = 12 pF T_{use} = +25 °C±3 °C Level of drive : 10 μW.π circuit Not include aging.
3	Frequency versus temperature characteristics	f_tem	$\pm 10 \times 10^{-6}$	Ta = -20 °C to +75 °C (Ref. at + 25 °C ± 3 °C) Level of drive : 100 μW Series resonance.
4	Motional resistance(ESR)	R_1	40 Ω Max.	π circuit (IEC60444-2)
5	Insulation resistance	IR	500 MΩ Min.	DC 100 V±15 V 60 sec.
6	Frequency aging	f_age	$\pm 1 \times 10^{-6}$/year	T_{use} = +25 °C±3 °C(no bias)

[4] Environmental and mechanical characteristics

(The company evaluation condition : We evaluate it by the following examination item and examination condition.)

No.	Item	Value *1 *2 $\Delta f / f [1 \times 10^{-6}]$	Test Conditions
1	Drop	*3 ± 2.0	100 g dummy Jig (SE Standard) drop from 1500 mm height on the concrete 3 directions 10 times
2	Vibration	*3 ± 1.0	10 Hz to 55 Hz amplitude 0.75 mm 55 Hz to 500 Hz acceleration 98 m/s^2 10 Hz → 500 Hz → 10 Hz 15 min./cycle 6 h (2 hours , 3 directions)
3	High temperature storage	*3 ± 2.0	+85 °C × 1 000 h
4	Low temperature storage	*3 ± 2.0	-40 °C × 1 000 h
5	Temperature humidity storage	*3 ± 2.0	+85 °C × 85 %RH × 1 000 h
6	Temperature cycle	*3 ± 2.0	-40 °C ↔ +85 °C 30 minutes at each temp. 1 000 cycle
7	Sealing	*3 1×10^{-9} Pa•m^3/s Max.	For He leak detector
8	Shear	No peeling-off at a solder part	10 N press for 10 s ± 1 s Ref. IEC 60068-2-21
9	Pull – off	No peeling-off at a solder part	10 N press for 10 s ± 1 s Ref. IEC 60068-2-21
10	Solderability	Terminals must be 95% covered With fresh solder.	Dip termination into solder bath at +235 °C ± 5 °C for 5 s (Using Rosin Flux)
11	Resistance to soldering heat	± 1.0	For convention reflow soldering furnace (3 times) (For IPC/JEDEC J-STD-020D.1)

< Notes >

1. *1 each test done independently.
2. *2 measuring 24 h later leaving in room temperature after each test.
3. *3 Item No.1 to No.7shall be tested after following pre conditioning.
4. Resistance at before above tests should be less than ±20 % or less than ±10 Ω.
5. Pre conditioning : Test crystal must be leaving in room temperature for 24 h after reflow(3 times).

Convention reflow (follow to IPC / JEDEC J-STD-020D.1)

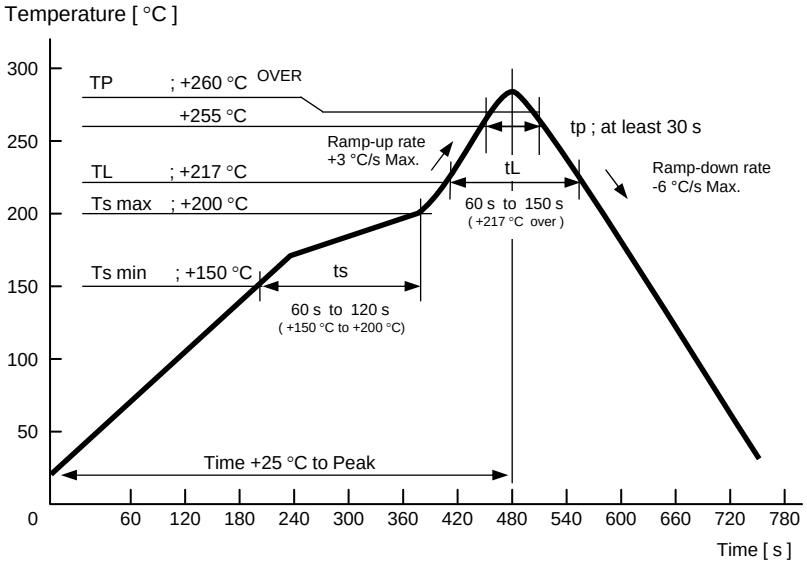

[5] Dimensions and Circuit

1) Outline drawing

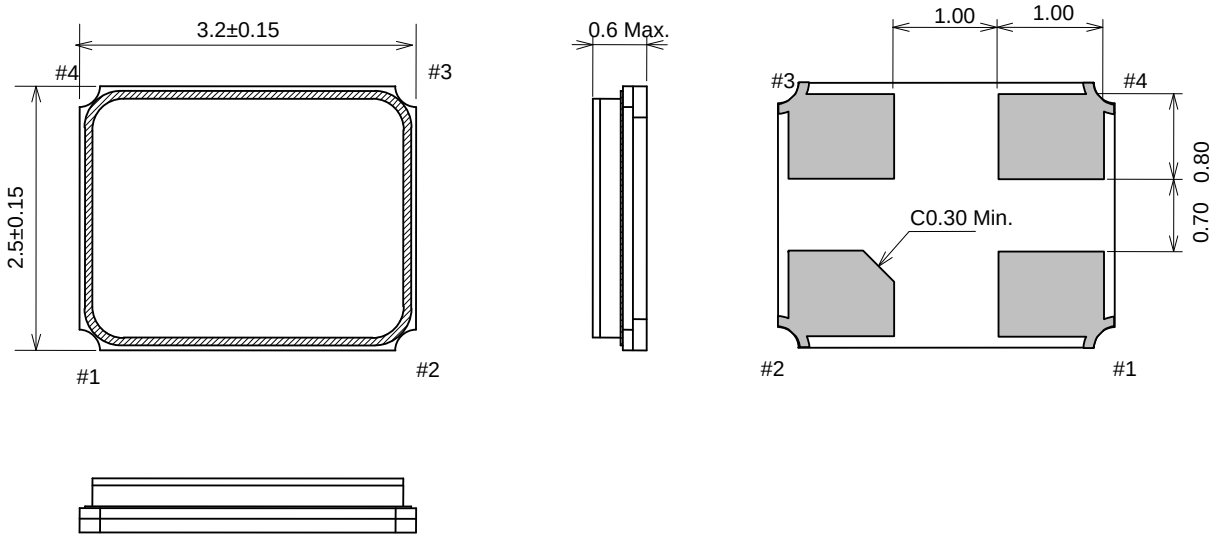

2) Circuit

(Top View)

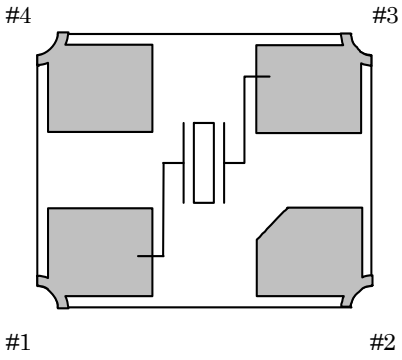

Pin
＃1, ＃3 : X'tal
＃2, ＃4 : GND

Type	TSX-3225	Terminal treatment	W+Ni+Au plated	Unit	1 = 1mm

[6] Recommended soldering pattern and Marking layout

1) Recommended soldering pattern

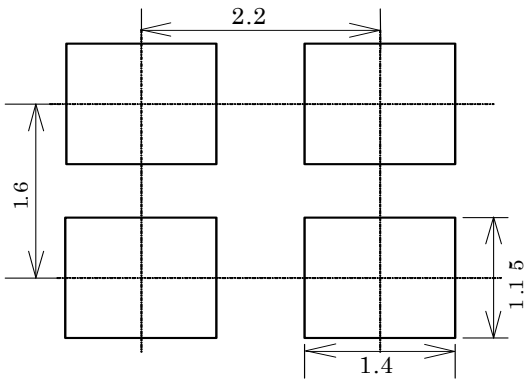

2) Marking layout

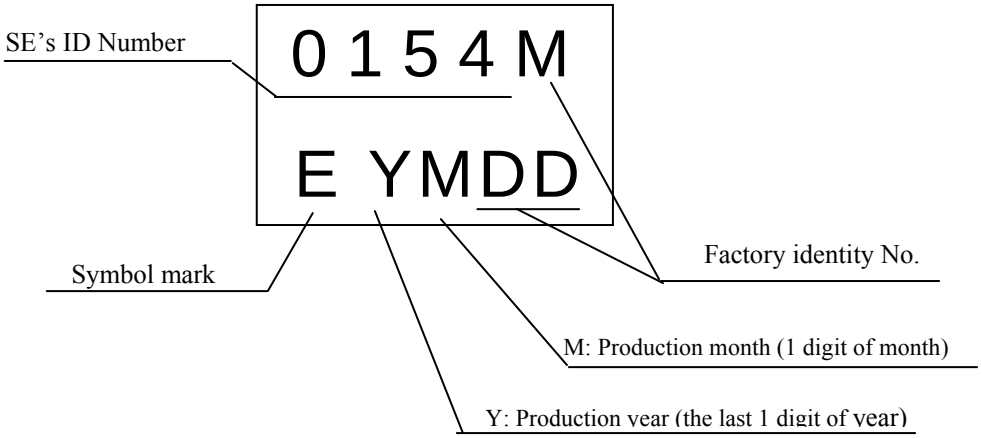

Production month

Month	1	2	3	4	5	6	7	8	9	10	11	12
Marking	1	2	3	4	5	6	7	8	9	X	Y	Z

- The above marking layout shows only marking contents and their approximate position and it is not for font, size and exact position.

Type : TSX-3225	Unit : 1 = 1mm

[7] Notes

1. Max three (3) times reflow is allowed.
   I hope the gauntlet ahead in 5s or less from +350 °C or less in case of the adjustment with the soldering iron.

2. Too much exciting shock or vibration may cause deterioration on damage. Depending on the condition such as a shock in assembly machinery, the products may be damaged.
   Please check your condition in advance to maintain shock level to be smallest.

3. The shortest line patterning on board is recommendable.
   Too long line on board may cause of abnormal oscillation.

4. Please normal temperature (+15 °C to +35 °C) and normal humidity (25 to 85 %RH) as much as possible for the frequency accuracy securing.
   Storing the crystal products under higher or lower temperature or high humidity for long period may affect frequency stability or solderability. Check conditions prior to use.

5. This product may be affected to ultrasonic cleaning. Check conditions prior to use.

6. When do the be dewy of the oscillation circuit board, the frequency change or the oscillation stop is generated. Please use it under the condition without the be dewy.

7. Applying excessive excitation force to the crystal unit may cause deterioration damage.

8. Few data or readings taken at user side may be different from our company's data.
   Confirmation of the different value is necessary before application.

9. To avoid malfunction, no pattern under or near the crystal is allowed.

10. Unless adequate negative resistance is allocated in the oscillation circuit, start up time of oscillation may be increased, or no oscillation may occur. In order to avoid this, please provide enough negative resistance in the circuit design.

    <How to check the negative resistance>

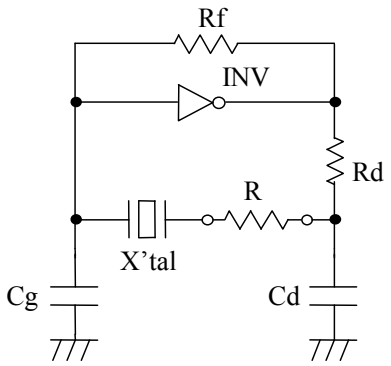

1) Connect the resister(R) to the circuit in series with the crystal unit.

2) Adjust R so that oscillation can start (or stop).
   Negative resistance of circuit (-R) =
   R+ Series resistance of crystal (R1)

3) Measure R when oscillation just start (or stop) in above(2)
   R> R1 Max. 5 to 10 times.

TAPING SPECIFICATION

1. APPLICATION

This document is applicable to TSX-3225

2. CONTENTS

Item No.	Item	Page
[1]	Taping specification	1 to 2
[2]	Inner carton	3
[3]	Shipping carton	
[4]	Marking	4
[5]	Quantity	
[6]	Storage environment	
[7]	Handling	

[1] Taping specification

Subject to EIA-481 & IEC-60286

(1) Tape dimensions TE0804L

Material of the Carrier Tape : PS

Material of the Top Tape : PET+PE

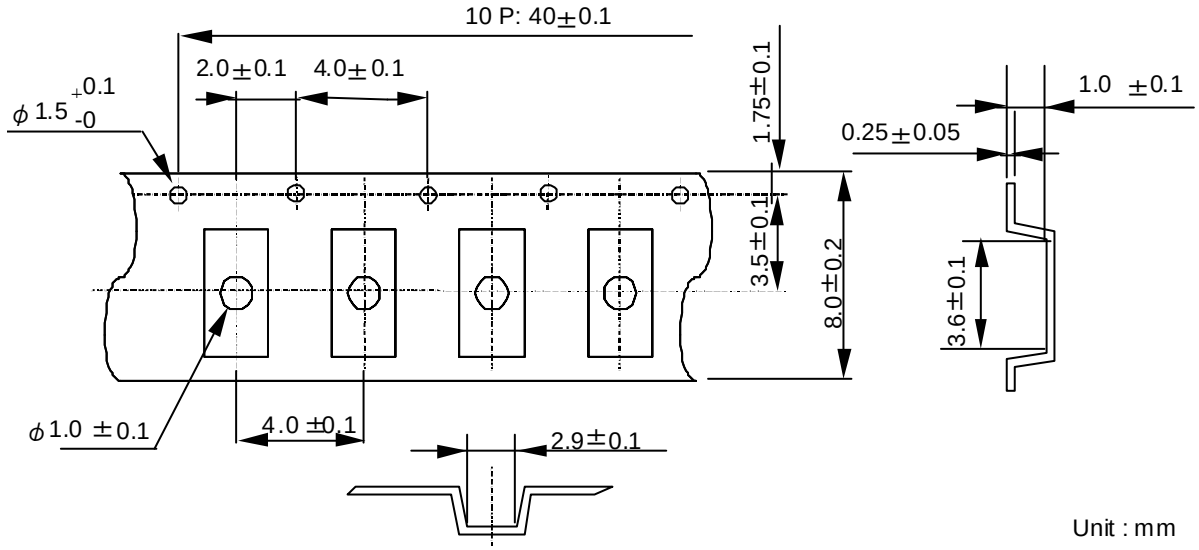

Unit : mm

(2) Reel dimensions EIAJ RRM08Bc60

(a) Center material : PS

(b) Material of the Reel : PS

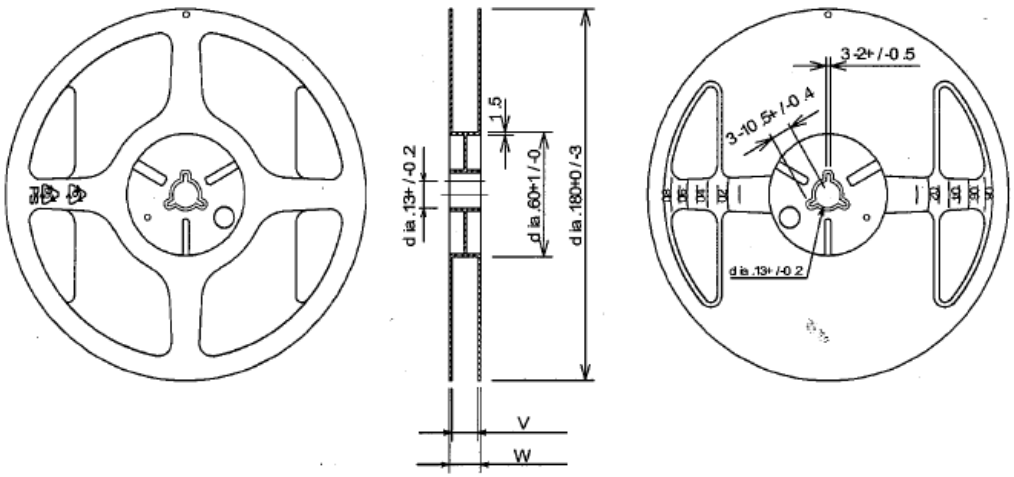

V(mm)	W(mm)
9.0+/−0.3	11.4+/−1

(3) Packing

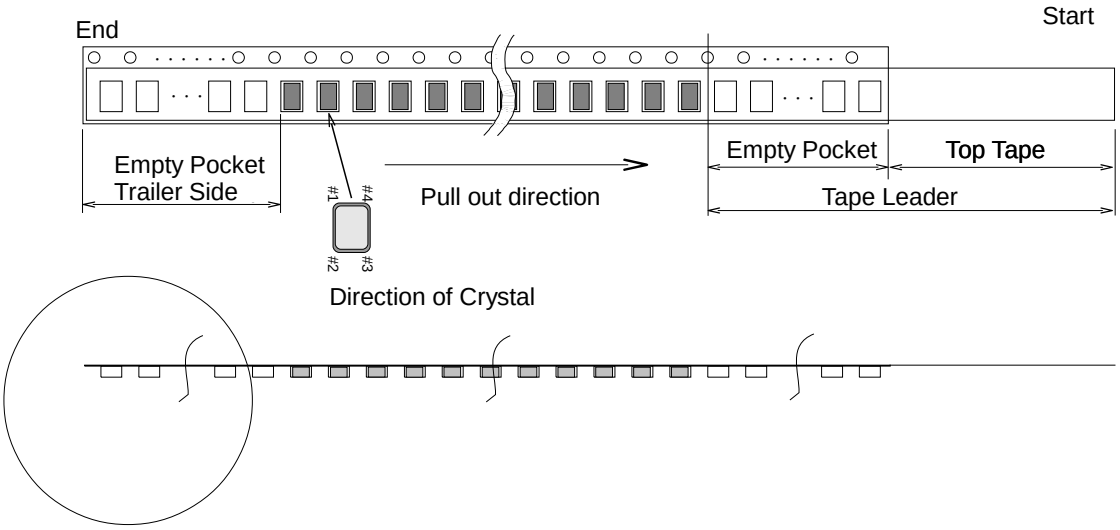

Item		Empty Space
Tape Leader	Top Tape	Min. 250 mm
	Carrier Tape	Min. 150 mm
Tape Trailer	Top Tape	Min. 0 mm
	Carrier Tape	Min. 160 mm

(4) Peel force of the cover tape

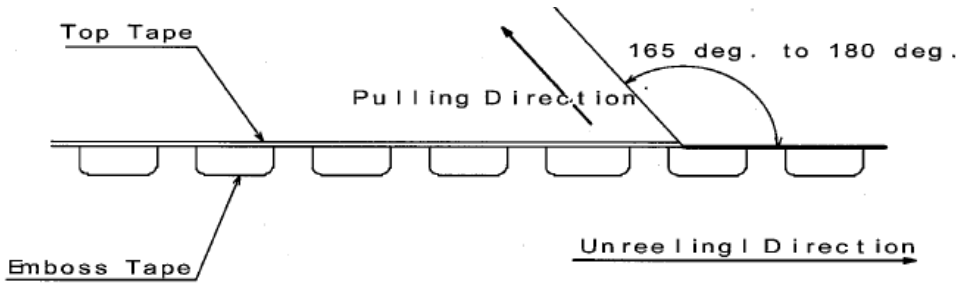

(a) angle : cover tape during peel off and the direction of unreeling shall be 165° to 180°.

(b) peel speed : 300 mm / min.

(c) strength : 0.1 to 1 N.

[2] Inner Carton

a) Packing to antistatic bag

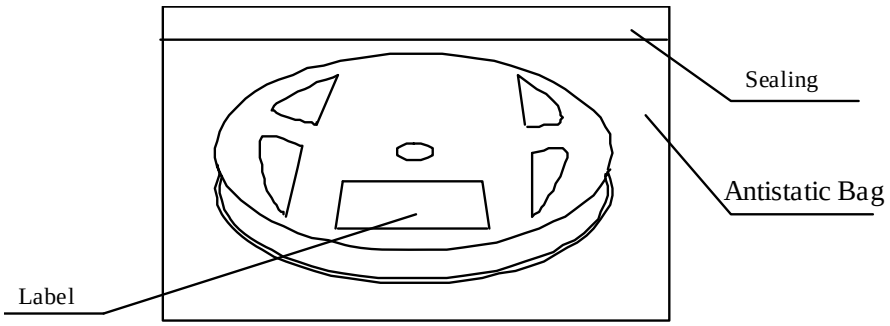

b) Packing to inner carton

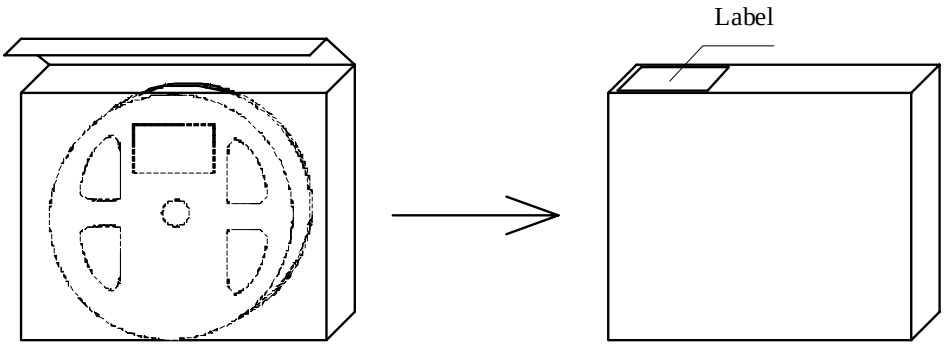

[3] Shipping Carton

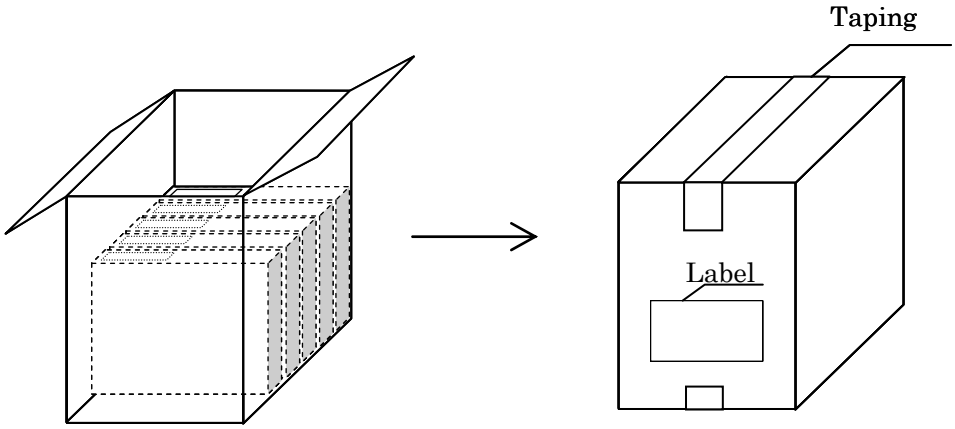

[4] Marking

(1) Reel marking

- Reel marking shall consist of :

1) Parts name
2) Quantity
3) Manufacturing Date or symbol
4) Manufacturer's Date or symbol
5) Others (if necessary)

(2) Inner carton marking

- Same as Reel marking.

(3) Shipping carton marking

- Shipping carton marking shall consist of :

1) Parts name
2) Quantity

[5] Quantity

- 2 000 pcs./reel

[6] Storage environment

(1) Before open the packing, we recommend to keep less than +30 °C and 85 %RH of Humidity, and to use it less than 6 months after delivery.

(2) We recommend to open Package in immediately before use. After open Package, We recommend to keeps less than 6 month. No need dry air before soldering work if it is less than temperature +30 °C, 85 humidity %RH.

(3) Not to expose the sun.

(4) Not to storage with some erosive chemicals.

(5) Nothing is allowed to put on the reel or carton to prevent mechanical damage.

[7] Handling

To handle with care to prevent the damage of tape, reel and products.

- PROCESS QUALITY CONTROL -

No.IA-0602-02-AAE-3 **SMD TYPE AT STRIP CRYSTAL TSX-3225**

2012.09.14

Manufacturing process chart	No.	Section	Standards	Inspection, Control Items	Inspection Methods	Instrument	Record
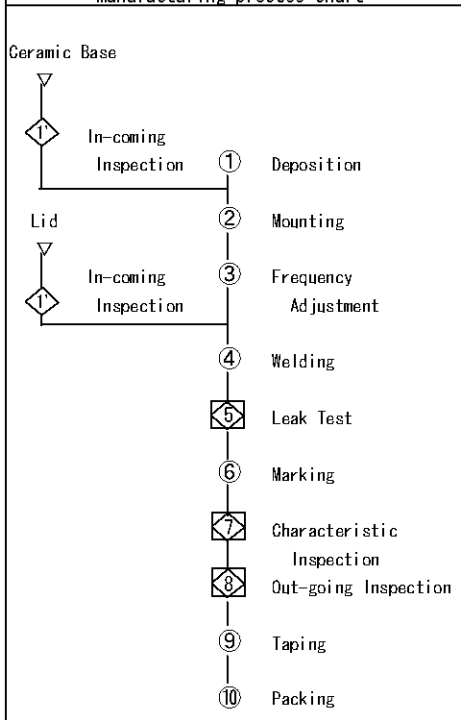	1	Production Section (Malaysia Plant/Thailand Plant)	Manufacturing Instruction Sheet	Frequency Outer Appearance	Sampling 〃	Blank Oscillator Microscope	Process Data Sheet
	2	Production Section (Malaysia Plant/Thailand Plant)	〃	Outer Appearance	Sampling	Microscope	〃
	3	Production Section (Malaysia Plant/Thailand Plant)	〃	Frequency	Sampling	Frequency Counter	〃
	4	Production Section (Malaysia Plant/Thailand Plant)	〃	Outer Appearance	Sampling	Microscope	〃
	5	Production Section (Malaysia Plant/Thailand Plant)	〃	Package Leak	100% Inspection	Leak Tester	〃
	6	Production Section (Malaysia Plant/Thailand Plant)	〃	Outer Appearance	Sampling	Microscope	〃
	7	Production Section (Malaysia Plant/Thailand Plant)	〃	Crystal Impedance Frequency Insulation Resistance Temp. Characteristic	100% Inspection 〃 〃 〃	Inspection M/C 〃 〃 〃	〃
	8	Inspection Section (Malaysia Plant/Thailand Plant)	Out-going Inspection Standard	Crystal Impedance Frequency Outer Appearance	Sampling 〃 〃	Inspection M/C 〃 Microscope	Out-going Inspection Data Sheet
	9	Production Section (Malaysia Plant/Thailand Plant)	Manufacturing Instruction Sheet	Tape-Peel Strength	Sampling	Peeling Force Tester	Process Data Sheet
	10	Production Control Section (Malaysia Plant/Thailand Plant)	Manufacturing Instruction Sheet Packing Instruction Sheet	Destination Quantity	— —	— —	Delivery Slip

TSX－3225 Construction Drawing

No. : A-0602-AE-1

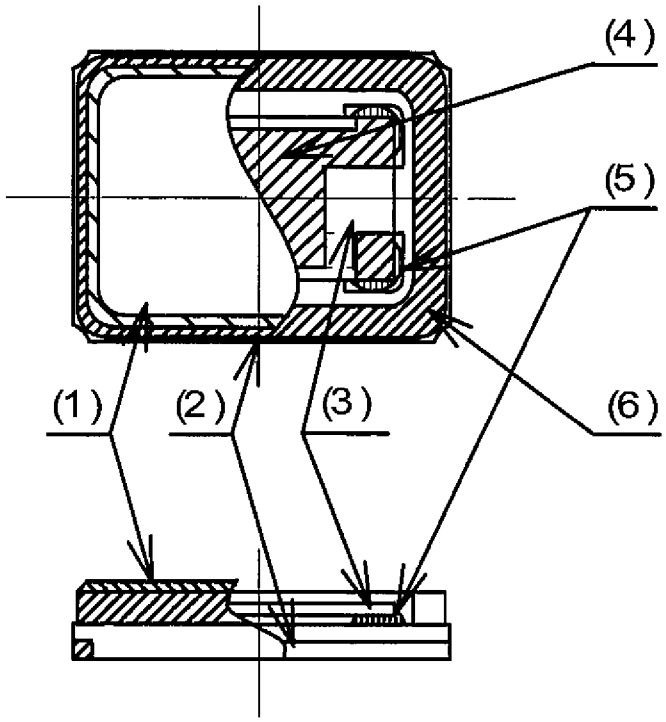

No	Parts name	Material	Surface treatment
(1)	LID	Cover	Ni Plating
(2)	Package	Ceramic	Au Plating
(3)	Crystal Chip	Crystal	
(4)	Electrode	Metals	Electrode Pattern(Ni+Au)
(5)	Ag Paste	Conductive paste	
(6)	Seam weld ring	Cover	Au Plating

RELIABILITY TEST DATA

Product Name : TSX-3225 (16MHz ≦ f0 ＜ 40MHz)

The Company evaluation condition

We evaluate environmental and mechanical characteristics by the following test condition . **No. A-06021-01-004E**

No.	ITEM	TEST CONDITIONS	VALUE *1 *2 Δ f / f [1 × 10^{-6}]	TEST Qty [n]	FAIL Qty [n]
1	Shock	100g dummy Jig(ETC Standerd) drop from 1500mm hight on Concrete 3 directions 10 time	(2) ± 2	22	0
2	Vibration	10 Hz to 55 Hz amplitude 0.75 mm 55 Hz to 500 Hz acceleration 98 m/s^2 10 Hz => 500 Hz => 10 Hz 15 min / cycle 6 h (2 h × 3 directions)	(2) ± 1	22	0
3	High temperature storage	+85°C × 1 000 h	(1) ± 2	22	0
4	Low temperature storage	-40 °C × 1 000 h	(1) ± 2	22	0
5	Temperature humidity storage	+85 °C × 85 %RH × 1 000 h	(1) ± 2	22	0
6	Temperature cycle	-40 °C <=> +85 °C 30 min at each temp. 1000 cycles	(1) ± 2	22	0
7	Sealing	For He leak detector	1×10^{-9}Pa·m^3/s Max	22	0
8	Shear	10 N press for 10 s ± 1 s Ref. IEC 60068-2-21	No peeling - off at a solder part	11	0
9	Pull - off	10 N press for 10 s ± 1 s Ref. IEC 60068-2-21	No peeling - off at a solder part	11	0
10	Solderability	Dip termination into solder bath at +235 °C ± 5 °C for 5 s (Using Rosin Flux)	Termination must be 95% covered with fresh solder	11	0
11	Resistance to soldering heat	For cinvention reflow soldering furnace (3 time)	± 1	22	0

Notes

1. Item No.1 to No.10 resistance at before above tests should be less than ±20% or less then ±10Ω.
2. *1 Each test done independently.
3. *2 Measuring 2h to 24h later leaving in room temperature after each test.
   (1) Measuring 24h later leaving in room temperature after each test.
   (2) Measuring 2h later leaving in room temperature after each test.

Qualification Data

Product Name : TSX-3225 (16MHz ≦ f0 ＜ 40MHz)

Δ f / f

No. A-06021-01-005E

1. Shock
100g×1500 mm × 3
3 directions ×10time

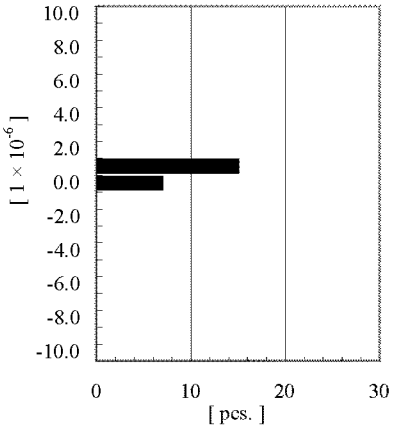

2. Vibration
10 Hz to 55 Hz amplitude 0.75 mm
55 Hz to 500 Hz acceleration 98 m/s2
15 min / cycle 6 h (2 h ×3 directions)

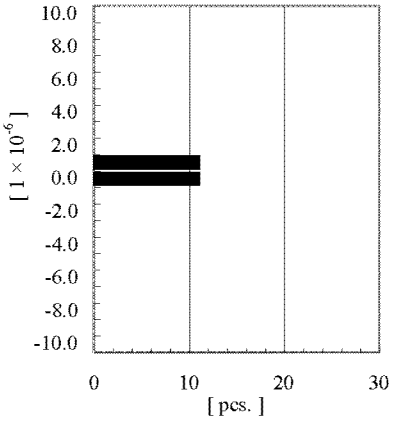

3. High temp. storage
+85 °C × 1 000 h

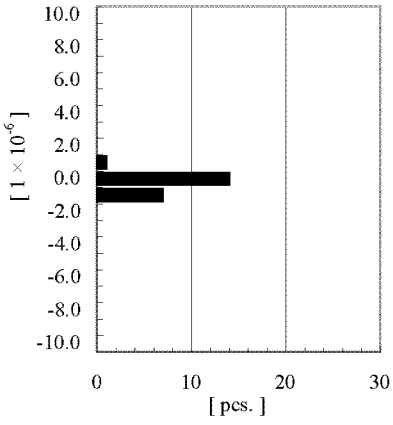

4. Low temp. storage
-40 °C × 1 000 h

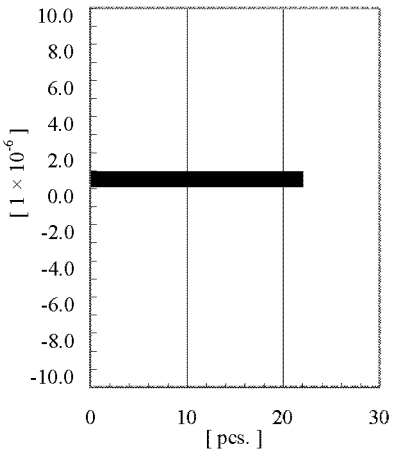

5. Temp.humidity. storage
+85℃×85 % × 1 000 h

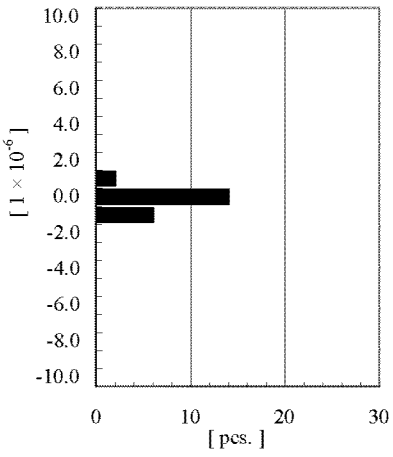

6. Temp. cycle
-40 °C ⇔ +85 °C
1000 cycles

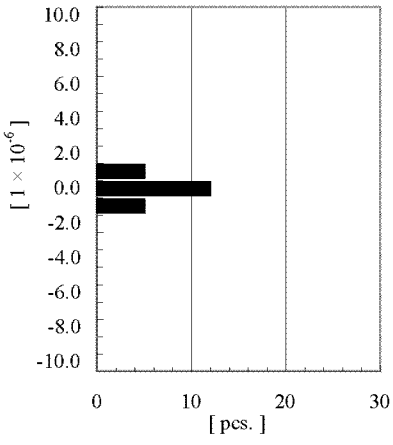

11.Resistance to soldering heat for convention reflow soldering furnace(3 time)

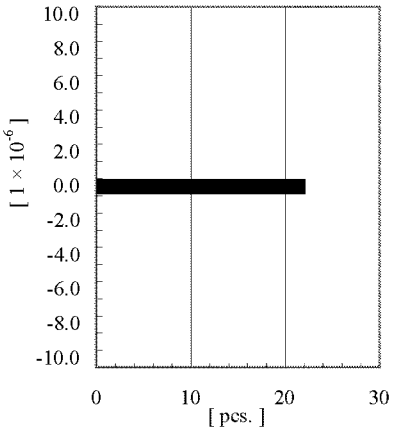

Qualification Data

Product Name : TSX-3225 (16MHz ≦ f0 ＜ 40MHz)

Δ CI

No. A-06021-01-006E

1.Shock
100g×1500mm×
3 directions × 10 time

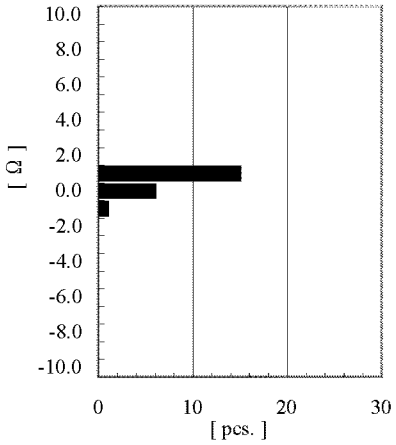

2. Vibration
10 Hz to 55 Hz amplitude 0.75 mm
55 Hz to 500 Hz acceleration 98 m/s2 15 min /
cycle 6 h (2 h ×3 directions)

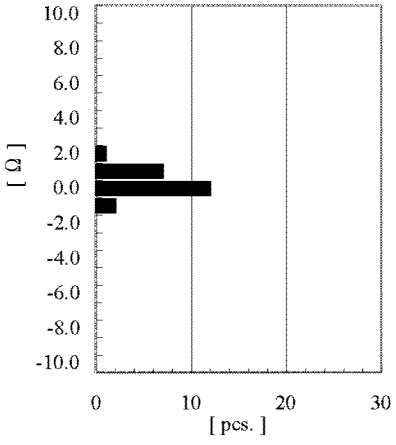

3. High temp. storage
+85 °C × 1 000 h

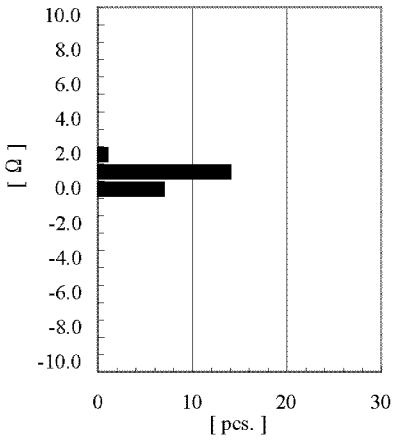

4. Low temp. storage
-40 °C × 1 000 h

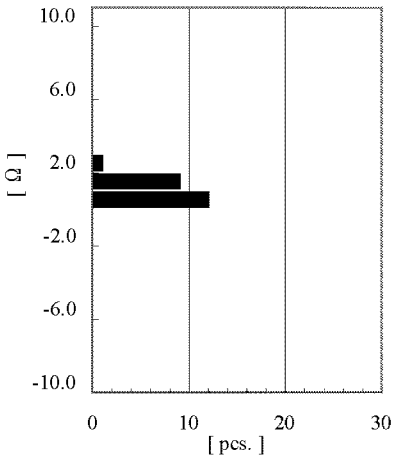

5. Temp.humidity storage
+85 °C ×85%RH× 1 000 h

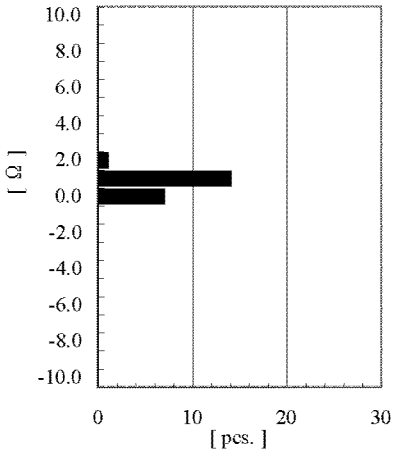

6. Temp. cycle
-40 °C ⇔ +85 °C
1000 cycles

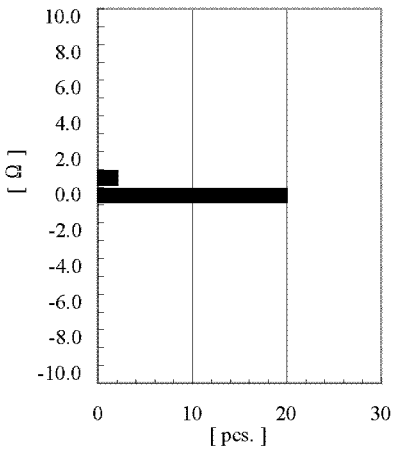

11. Resistance tosoldering
heat for convention reflow
soldering furnace(3time)

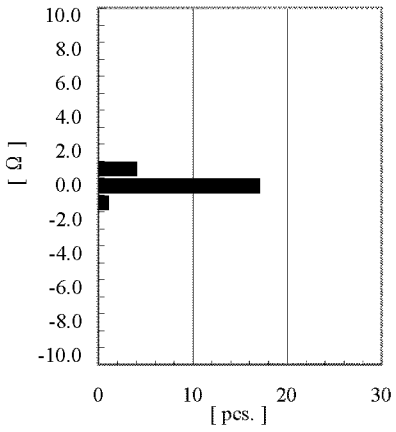

Qualification Data

ATTN : Shenzhen RoadRover Technology Co., Ltd

Quality and reliability data

No.ST13-469
Jan., 9, 2014
SEIKO EPSON CORP.
TD・CS QUALITY ASSURANCE DEPARTMENT

MODEL:TSX-3225

1.Machine Model

JEDEC JESD22-A115-A
(C = 200 pF ; R = 0Ω) : > ±100 Volt

2.Human Body Model

JESD22-A114D
(C = 100 pF ; R = 1 500Ω) : > ±500 Volt

Criterion: Frequency change rate exceeded ± 2×10^{-6}