TXC CORPORATION
4F, NO. 16, Sec. 2 Chung Yang S Rd., Peitou, Taipei, Taiwan.
TEL : 886-2-2894-1202 , 886-2-2895-2201 FAX : 886-2-2894-1206 , 886-2-2895-6207 www.txccorp.com

SPECIFICATION FOR APPROVAL

CN: 0

CUSTOMER	:	
PRODUCT TYPE	:	SMD TUNING FORK 3.2X1.5
NOMINAL FREQ.	:	32.768KHz
TXC P/N	:	AH03200011
REVISION	:	S1
CUSTOMER P/N	:	
PM / SALES	:	
DATE	:	

CUSTOMER SIGNATURE & Date

(1) TXC requires one copy returned with signature and title of authorized individual that signifies acceptance of the attached specifications.

(2) Orders received and accepted by TXC after return of signed copy of specification will be produced per these specifications.

(3) Any changes to these specifications must be agreed upon by both parties and new revision of the Product Specification Sheet will be issued.

(4) Any issuance of purchase order prior to consigning back the Approval page of "Specification Sheets" from customers will be regarded as the agreement on the contents of these specifications.

Attachment: Product Specification Sheet
1
2
3
4
5

Halogen Free
RoHS Compliant

TXC CORPORATION

4F, NO. 16, Sec. 2 Chung Yang S Rd., Peitou, Taipei, Taiwan.

TEL : 886-2-2894-1202 , 886-2-2895-2201 FAX : 886-2-2894-1206 , 886-2-2895-6207 www.txccorp.com

PRODUCT SPECIFICATION SHEET

CN: _____

PRODUCT TYPE	:	SMD TUNING FORK 3.2X1.5
NOMINAL FREQ.	:	32.768KHz
TXC P/N	:	AH03200011
REVISION	:	S1

RD	QA	MFG
Robin Huang		
17-Jul-15		

NOTE:

(1)The green product standard set by TXC is based upon the international standards. Related information is publicly described on the TXC's Website, and updated regularly. The document is compliant with the latest green product quality system directives at the time.

(2)Revision "Sx" is for engineering samples only. PE/RD's approval required.

(3)Revision "Ax" is production ready. PE, QA and MFG's approval required

Halogen Free

RoHS Compliant

Rev	Revise page	Revise contents	Date	Ref.No.	Reviser
S1	NA	Initial release	17-Jul-15	-	Xiaoyan Jiang

■ ELECTRICAL SPECIFICATIONS

	Parameters	Sym.	Electrical Spec.				Notes
			Min	Typical	Max	Unit	
1	Nominal Frequency	F0		32.768		KHz	-
2	Frequency Tolerance	Δf/fo		± 20		ppm	at 25 ℃ ±3℃
3	Load Capacitance	CL		7.0		pF	-
4	Driver Level	DL	-	0.1	0.5	μW	-
5	Equivalent Series Resistance	ESR	-	-	70	KΩ	at 25 ℃ ±3℃
6	Turnover Temperature	Tp	20	25	30	℃	at 25 ℃ ±5℃
7	Parabolic Curvature Constant	K	-	-	-0.04	ppm/℃^{2}	-
8	Operating Temperature	-	-40	~	125	℃	-
9	Storage Temperature	-	-55	~	125	℃	-
10	Insulation Resistance	IR	500	-	-	MΩ	at DC 100V±15V
11	Shunt Capacitance	C0	0.6	-	1.2	pF	-
12	Motional Capacitance	C1	3	-	4.4	fF	-
13	Q	-	13	-	-	k	-
14	Aging	Δf/f		±3		ppm	1st Year

■ DIMENSIONS

(UNIT:mm)

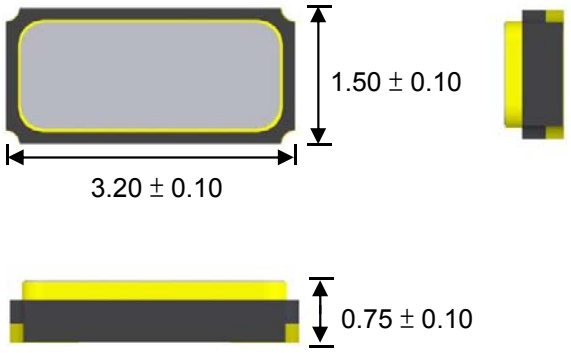

■ RECOMMENDED SOLDER PAD

(UNIT:mm)

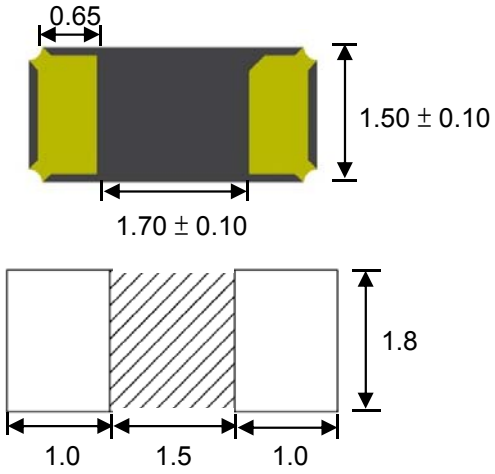

■ SUGGESTED REFLOW PROFILE

Total time : 200 sec. Max.

Solder melting point :220℃

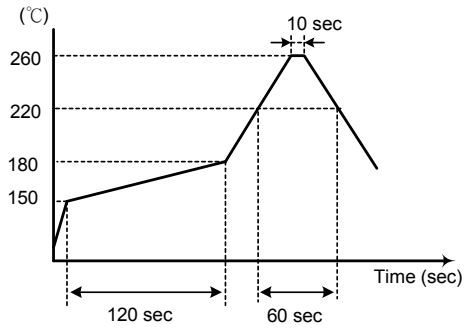

■ TEMPERATURE V.S FREQENCY CURVE

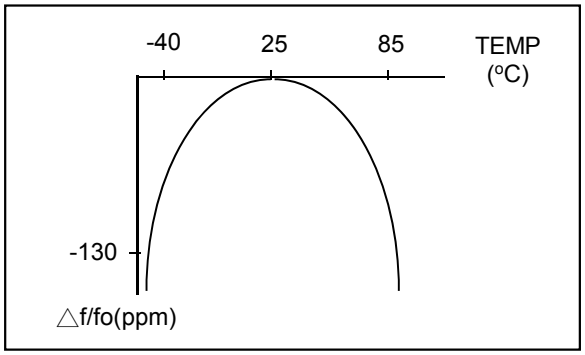

■ MARKING

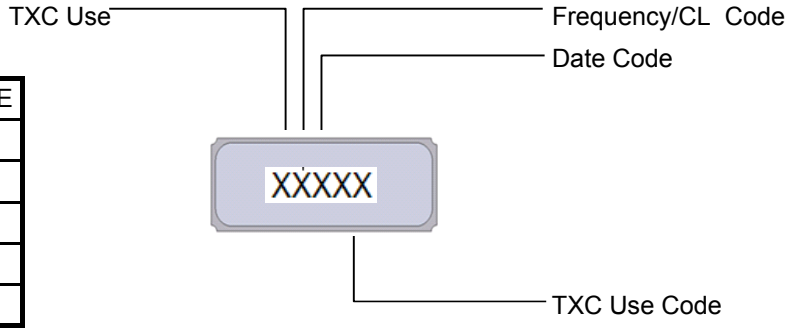

Frequency /CL Code

KHz	PF	CODE
32.768	12.5	A
32.768	7.0	B
32.768	9.0	C
32.768	6.0	D
32.768	7.6	E

Date Code

YEAR \ MONTH	JAN	FEB	MAR	APR	MAY	JUN	JUL	AUG	SEP	OCT	NOV	DEC
2001 2005 2009 2013 2017	A	B	C	D	E	F	G	H	J	K	L	M
2002 2006 2010 2014 2018	N	P	Q	R	S	T	U	V	W	X	Y	Z
2003 2007 2011 2015 2019	a	b	c	d	e	f	g	h	j	k	l	m
2004 2008 2012 2016 2020	n	p	q	r	s	t	u	v	w	x	y	z

This date code will be cycled every four years

■ PACKING

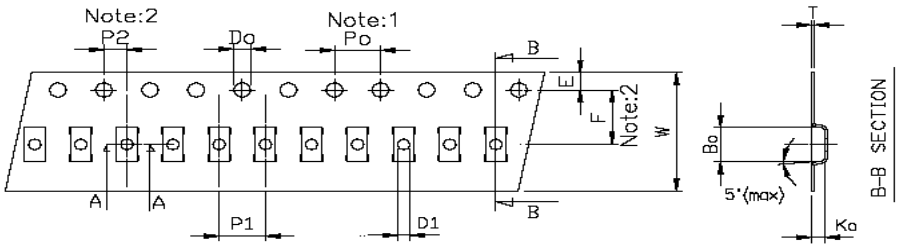

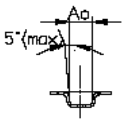

A–A SECTION

Ao= 1.8±0.10 mm
Bo= 3.5±0.10 mm
Ko= 0.87±0.10

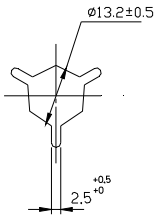

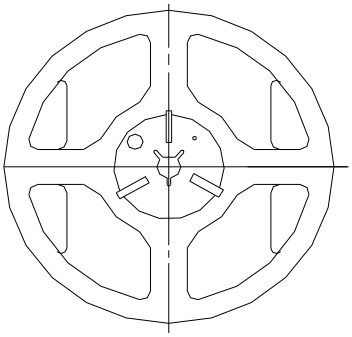

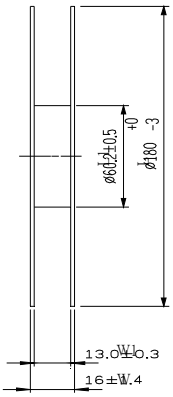

CARRIER TAPE DIMENSIONS	K1	P0	P1	P2	D0	D1	E	F	10P0	W	T	pcs / Reel
	–	4	4	2	1.55	1.1	1.75	5.5	40	12	0.25	3K

REEL DIMENSIONS	W	W1	L	L1
	16±1.4	13±0.3	180+0/-3	60.2±0.5

REMARK :
1. 230 mm (9.05) minimum leader which consist of carrier and/or tape followed by a minimum of 160 mm (6.3) of empty carrier tape sealed with cover tape.
2. 160 mm (6.3) minimum trailer of empty carrier tape sealed with cover tape.

■ PACKING

Reel Quantity :
1. Reel X 6 (6 Reels)
2. Reel X 12 (12 Reels)
3. Reel X 25 (12 Reels + 13 Reels)
4. Reel X 50 (12 Reelsx2 + 13 Reelsx2)

Box Size:
1. L200 X W200 X H140mm
2. L200 X W200 X H250mm
3. L400 X W200 X H250mm
4. L400 X W400 X H280mm

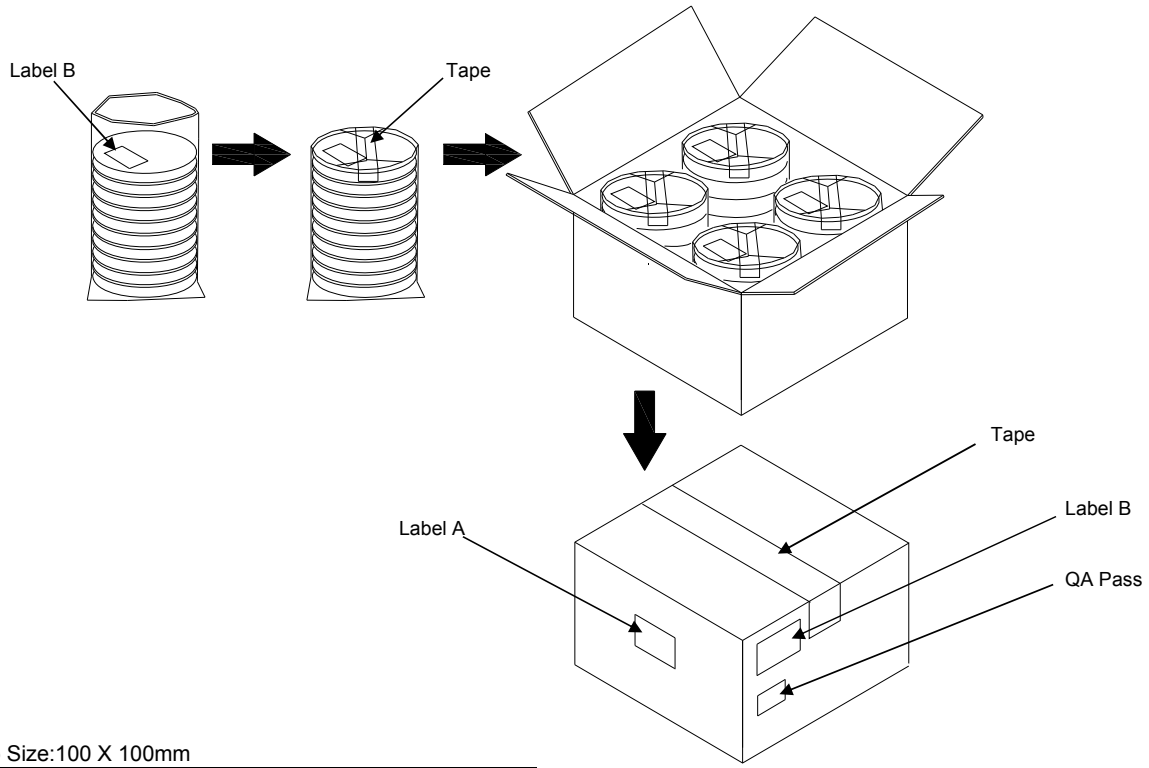

(Label A) Size:100 X 100mm

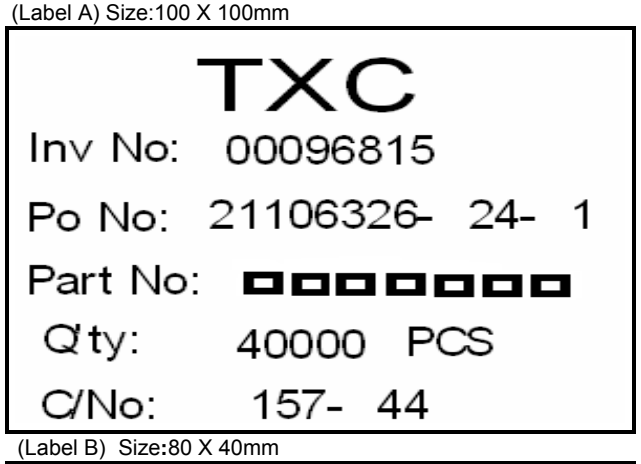

(Label B) Size:80 X 40mm

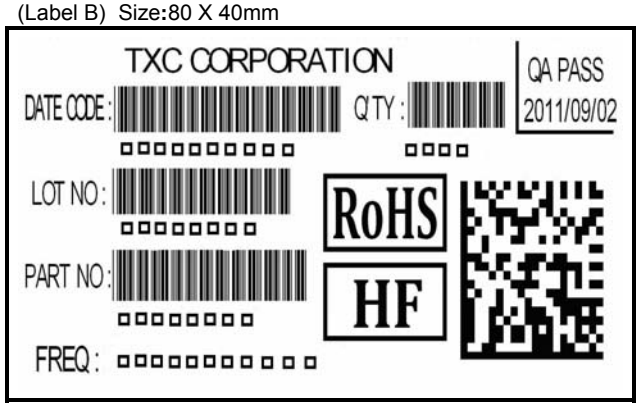

[STORAGE]

1.The storage time to be 1 year maximum.

2.Don't be caught in the rain.

3.The storage environment shall be 5℃ ~40℃ temperature and 30% ~ 75%RH humidity and free from the sun shine.

4.If customers have special requirements, we can paste labels according to it.

STRUCTURE ILLUSTRATION

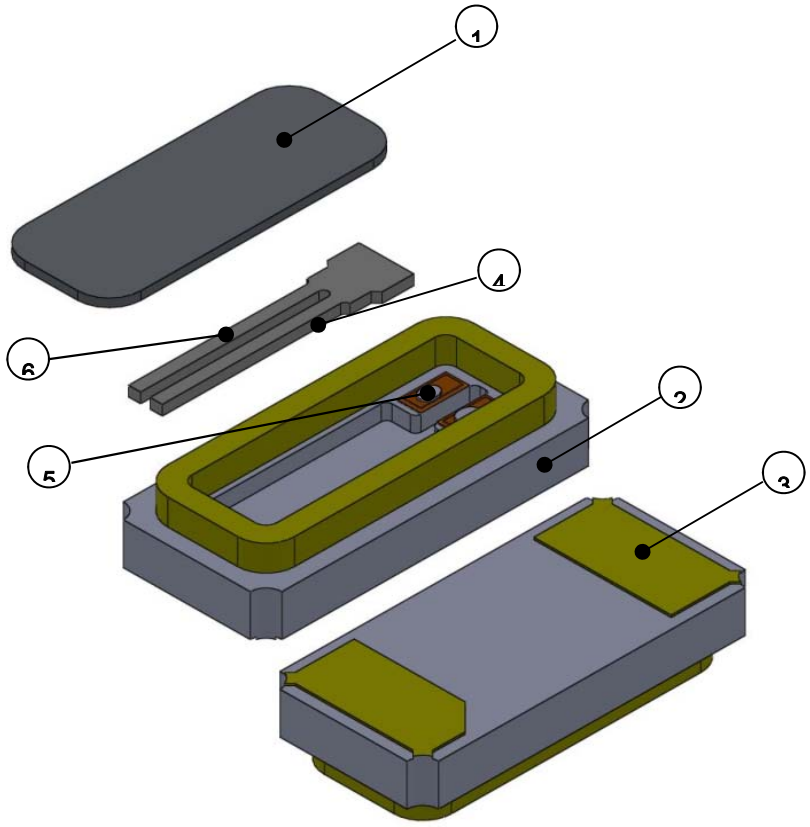

NO	COMPONENTS	MATERIALS	FINISH/SPECIFICATIONS
1	Lid	Kovar(Fe+Co+Ni) Alloy	-
2	Base(Package)	Ceramic(Al_2O_3)	Alumina Ceramics
3	PAD	Au	Tungsten metalize + Ni plating + Au plating
4	Crystal chip	SiO_2	-
5	Conductive adhesive	Ag	Silicon resin
6	Electrode	Au+Cr	-

UNIT WEIGHT:

0.01197±0.001g/pcs

■ RELIABILITY SPECIFICATIONS (AEC-Q200 Compliant)

1.Mechanical Endurance

No.	Test Item	Test Methods		REF. DOC
1	Drop Test	150 cm height, fall freely onto concrete floor 3 times.		MIL-STD-202
1	Mechanical Shock	Device are shocked to half sine wave (1000 G) three mutually perpendicular axes each 3 times. 0.5m sec. duration time		MIL-STD-202
1	Vibration	Frequency range Amplitude Sweep time Perpendicular axes each test time	10 ~ 2000 Hz 1.52 mm,20G 20 minute 4 hours (Total test time 12 hours)	MIL-STD-883
1	Solderability	Temperature Immersing depth Immersion time Flux	245 ℃ ± 5℃ 0.5 mm minimum 5 ± 1 seconds Rosin resin methyl alcohol solvent (1 : 4)	MIL-STD-883

2.Environmental Endurance

No.	Test Item	Test Methods		REF. DOC
2	Resistance To Soldering Heat	Pre-heat temperature Pre-heat time Test temperature Test time	125 ℃ 60 ~ 120 sec. 260 ± 5 ℃ 10 ± 1 sec.	MIL-STD-202
2	High Temp. Storage	+ 125 ℃ ± 3 ℃ for 1000 ± 12 hours		MIL-STD-883
2	Low Temp. Storage	- 40 ℃ ± 3 ℃ for 1000 ± 12 hours		MIL-STD-883
2	Temperature cycling	-40°C to 125°C ,10min dwell time at each temperature extreme. 1 min. maximum transition time.**1000**cycles.		MIL-STD-883
3	Pressure Cooker Storage	121 ± 3℃, RH100%, 2 bar, for 240 hours		EIA-JESD22
3	High Temp＆Humidity	85℃ ± 3℃, RH 85% , 1000Hrs		EIA-JESD22

■ SUGGESTED MANUAL SOLDER CONDITION

Temperature: 350 ± 10 ℃

Time: 3 sec.

Re-solder times: twice

■ FACTORY LOCATION

TXC (NINGBO) CORPORATION

NO.189 Huang Shan West Road, Beilun District,

Ningbo Zhejiang China