TXC CORPORATION

4F, NO. 16, Sec. 2 Chung Yang S Rd., Peitou, Taipei, Taiwan.

TEL : 886-2-2894-1202 , 886-2-2895-2201 FAX : 886-2-2894-1206 , 886-2-2895-6207 www.txccorp.com

SPECIFICATION FOR APPROVAL

CUSTOMER	:	
PRODUCT TYPE	:	SMD SEAM SEALING CXO 7.0×5.0
NOMINAL FREQ.	:	133.330000MHz
TXC P/N	:	7WA3300010
REVISION	:	S1
CUSTOMER P/N	:	
PM / SALES	:	
DATE	:	

CUSTOMER SIGNATURE & Date

(1) TXC requires one copy returned with signature and title of authorized individual that signifies acceptance of the attached specifications.

(2) Orders received and accepted by TXC after return of signed copy of specification will be produced per these specifications.

(3) Any changes to these specifications must be agreed upon by both parties and new revision of the Product Specification Sheet will be issued.

(4) Any issuance of purchase order prior to consigning back the Approval page of "Specification Sheets" from customers will be regarded as the agreement on the contents of these specifications.

Attachment: Product Specification Sheet

1

2

3

4

5

RoHS Compliant

TXC CORPORATION

4F, NO. 16, Sec. 2 Chung Yang S Rd., Peitou, Taipei, Taiwan.

TEL : 886-2-2894-1202 , 886-2-2895-2201 FAX : 886-2-2894-1206 , 886-2-2895-6207 www.txccorp.com

PRODUCT SPECIFICATION SHEET

PRODUCT TYPE	:	SMD SEAM SEALING CXO 7.0×5.0
NOMINAL FREQ.	:	133.330000MHz
TXC P/N	:	7WA3300010
REVISION	:	S1

PE/RD	QA	MFG
Oscar Chen		
20-May-14		

NOTE:

(1) The green product standard set by TXC is based upon the international standards. Related information is publicly described on the TXC's Website, and updated regularly. The document is compliant with the latest green product quality system directives at the time.

(2) Revision "Sx" is for engineering samples only. PE/RD's approval required.

(3) Revision "Ax" is production ready. PE, QA and MFG's approval required.

RoHS Compliant

Rev	Revise page	Revise contents	Date	Ref.No.	Reviser
S1	N/A	Initial released	20-May-14	N/A	Yachuan Miao

■ ELECTRICAL SPECIFICATIONS

Standard atmospheric conditions

Unless otherwise specified, the standard range of atmospheric conditions for making measurement and tests are as follow:

Ambient temperature : 25±5℃

Relative humidity : 40%~70%

If there is any doubt about the results, measurement shall be made within the following limits:

Ambient temperature : 25±3℃

Relative humidity : 40%~70%

Measure equipment

Electrical characteristics measured by MD 37WX-05M or equivalent.

Crystal cutting type

The crystal is using AT CUT (thickness shear mode).

Unit Weight:

0.152±0.002 g/pcs

	Parameters	Symbol	Electrical Spec.				Notes
			Min.	Typ.	Max.	Units	
1	Nominal Frequency	-		133.330000		MHz	-
2	Frequency Stability	-		±50		ppm	-
3	Operating Temperature	Topr	-20	25	70	℃	-
4	Storage Temperature	Tstg	-55	~	125	℃	-
5	Supply Voltage	VDD		3.3 ±10%		V	-
6	Input Current	Icc	-	-	50	mA	-
7	Enable Control	-		Yes		-	Pad 1
8	Output Load : CMOS	CL		15		pF	-
9	Output Voltage High	VoH	90%Vdd	-	-	V	-
10	Output Voltage Low	VoL	-	-	10%Vdd	V	-
11	Rise Time	Tr	-	-	10	ns	10%→90%VDD Level
12	Fall Time	Tf	-	-	10	ns	90%→10%VDD Level
13	Symmetry (Duty ratio)	TH/T	45	~	55	%	-
14	Start-up Time	Tosc	-	-	10	ms	-
15	Enable Voltage High	Vhi	70%Vdd	-	-	V	-
16	Disable Voltage Low	Vlo	-	-	30%Vdd	V	-
17	Aging	-		±3		ppm/yr.	1st. Year at 25℃
18	Output Disable Delay Time	T off	-	-	150	us	-
19	Output Enable Delay Time	T on	-	-	150	us	-

DIMENSIONS

(Unit:mm)

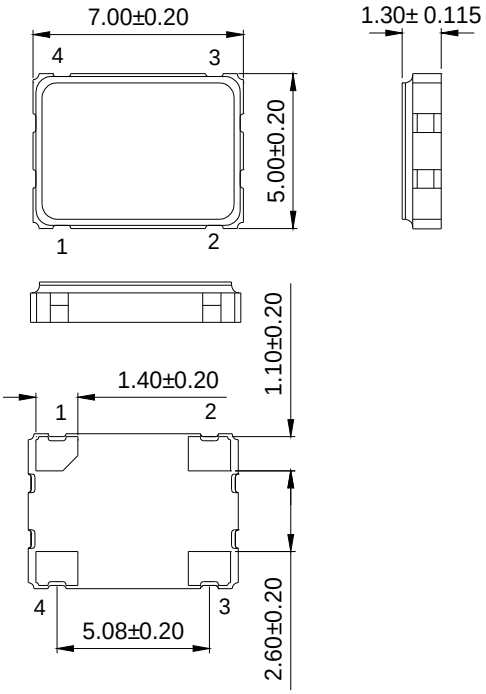

PAD FUNCTION:
1: ENABLE CONTROL
2: GND
3: OUT
4: VDD

Suggested Layout

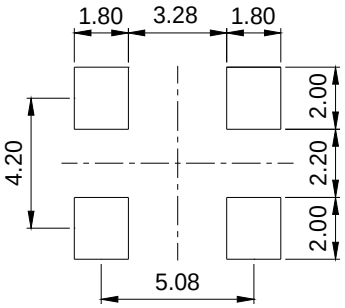

MARKING

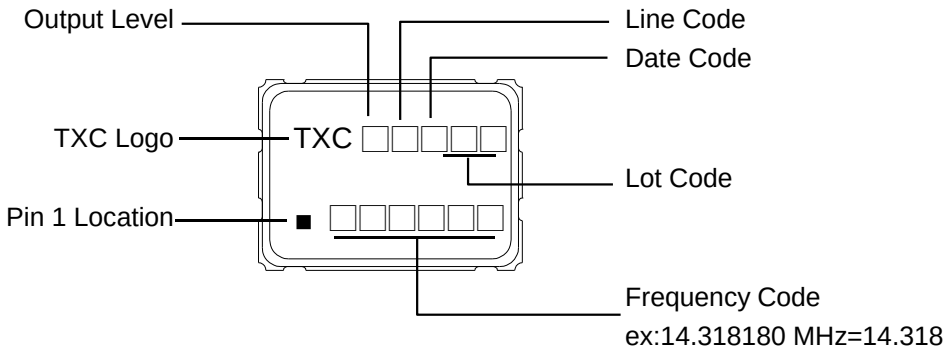

Output Level:

V_{DD}(V)	5.00	3.30	2.80	2.50	1.80	2.90	3.00	2.85	2.60	2.55	2.00	1.50	2.70	3.40	1.90	1.20	1.00
CODE	A	B	C	D	E	F	G	H	J	K	L	M	N	P	Q	R	S

Date Code:

YEAR \ MONTH				1 JAN	2 FEB	3 MAR	4 APR	5 MAY	6 JUN	7 JUL	8 AUG	9 SEP	10 OCT	11 NOV	12 DEC
2005	2009	2013	2017	A	B	C	D	E	F	G	H	J	K	L	M
2006	2010	2014	2018	N	P	Q	R	S	T	U	V	W	X	Y	Z
2007	2011	2015	2019	a	b	c	d	e	f	g	h	j	k	l	m
2008	2012	2016	2020	n	p	q	r	s	t	u	v	w	x	y	z

*This date code will be cycled every four years

Production location:Taiwan

■ TEST DIAGRAM

Control input (output enable/disable)
Logic 1 or open on pad 1: Oscillator output
Logic 0 on pad 1 : Disable output to high impedance

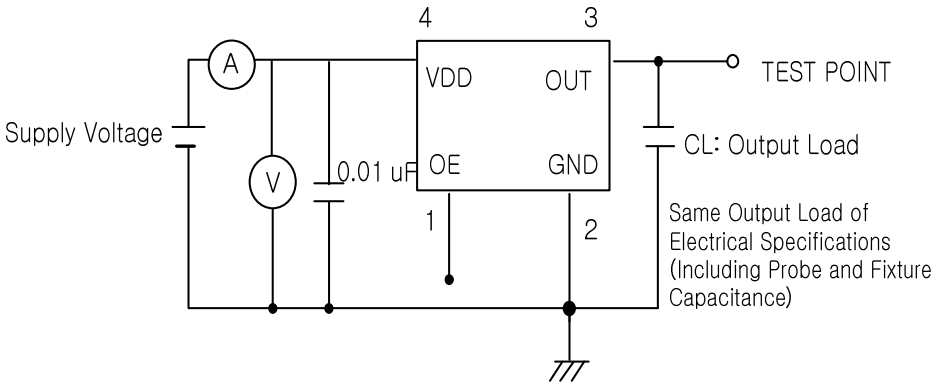

■ WAVEFORM CONDITIONS

Waveform measurement system should have a min. bandwidth of 5 times the frequency being tested.

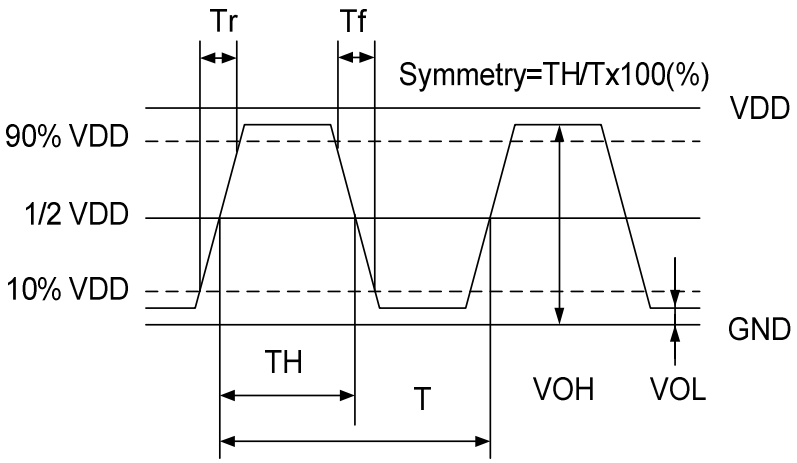

■ OUTPUT ENABLE / DISABLE DELAY

The following figure shows the oscillator timing during normal operation . Note that when the device is in standby, the oscillator stops. When standby is released, the oscillator starts and stable oscillator output occurs after a short delay.

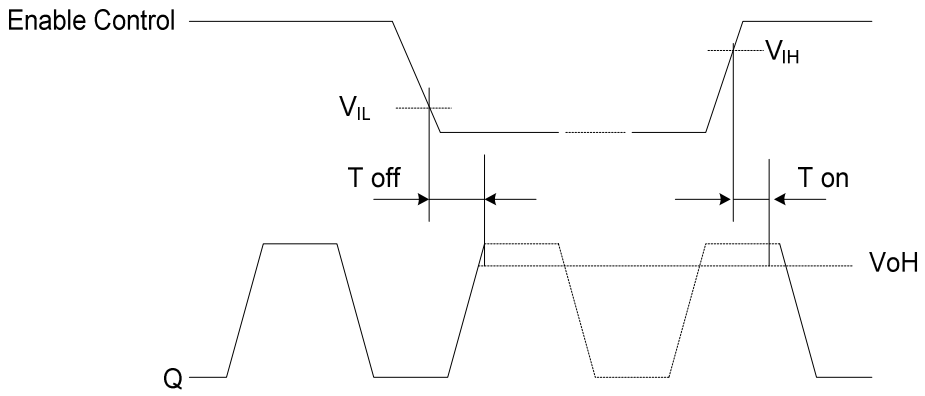

■ SUGGESTED REFLOW PROFILE

Total time : 200 sec. Max.

Solder melting point :220 ℃

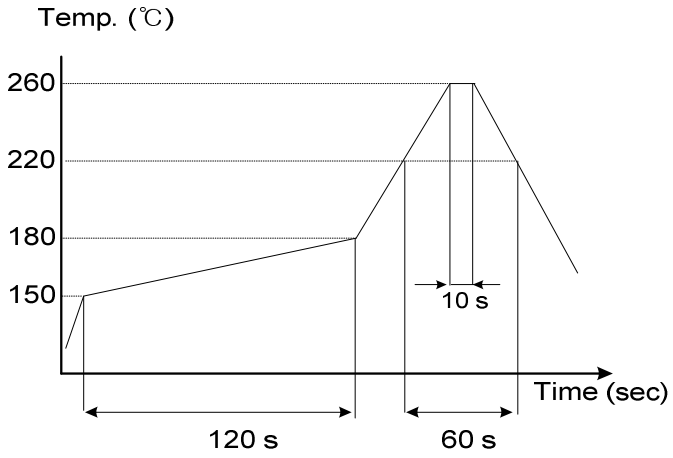

■ STRUCTURE ILLUSTRATION

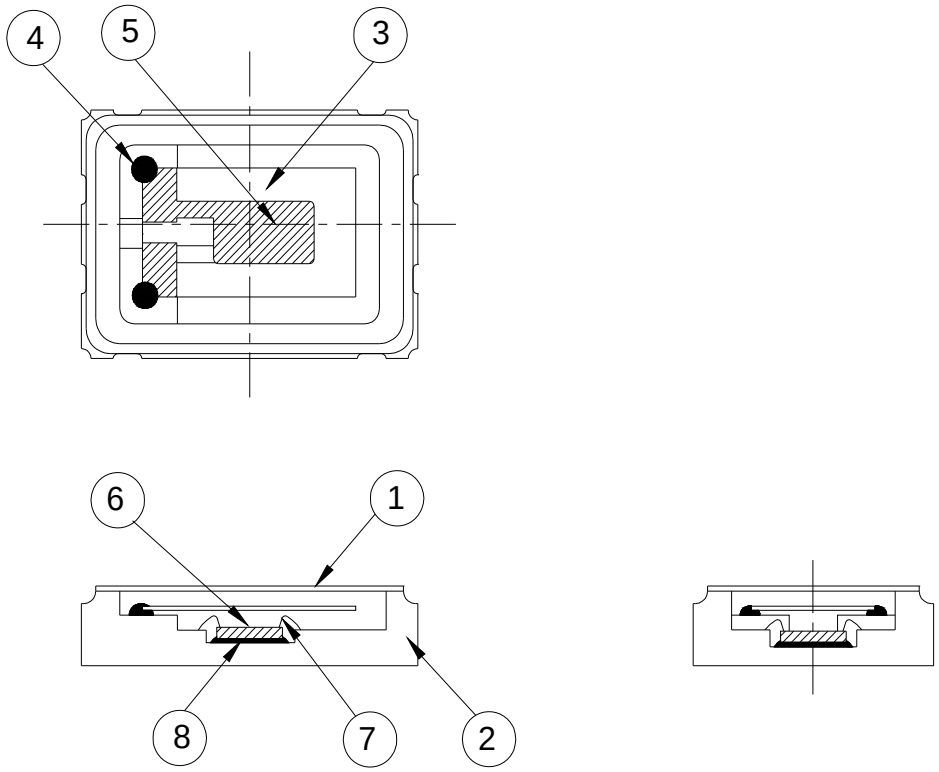

NO	COMPONENTS	MATERIALS	FINISH/SPECIFICATIONS
1	LID	Kovar (Fe/Co/Ni)	-
2	Base(Package)	Ceramic (Al_2O_3) + Kovar (Fe/Co/Ni)+Pad (Au)	Color black
3	Crystal blank	SiO_2	-
4	Conductive adhesive	Ag	Silicon resin
5	Electrode	Noble Metal	-
6	IC chip	-	-
7	Bonding wire	Au	Pad 1 options : NC is 5 wires , EN is 6 wires.
8	Die attached	Conductive (Ag)	Epoxy resin

■ TAPE & REEL

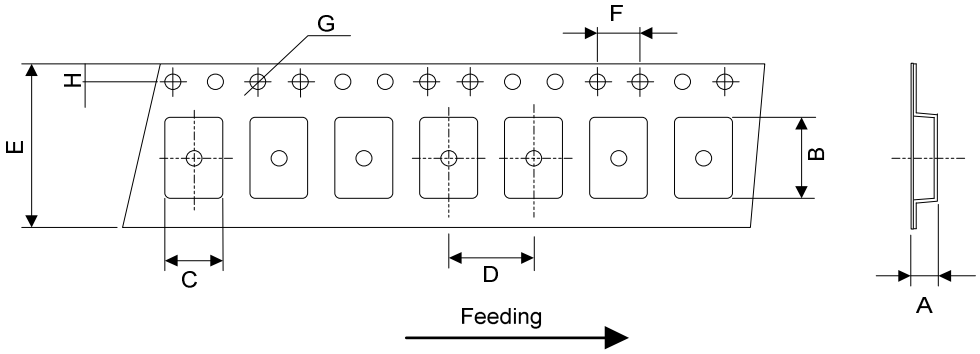

	A	B	C	D	E	F	G	H	
DIMENSIONS	2.00 ±0.10	7.90 ±0.10	5.45 ±0.10	8.00 ±0.10	16.00 ±0.30	4.00 ±0.10	1.50 +0.1/0	1.75 ±0.10	(UNIT:mm)

Remark:

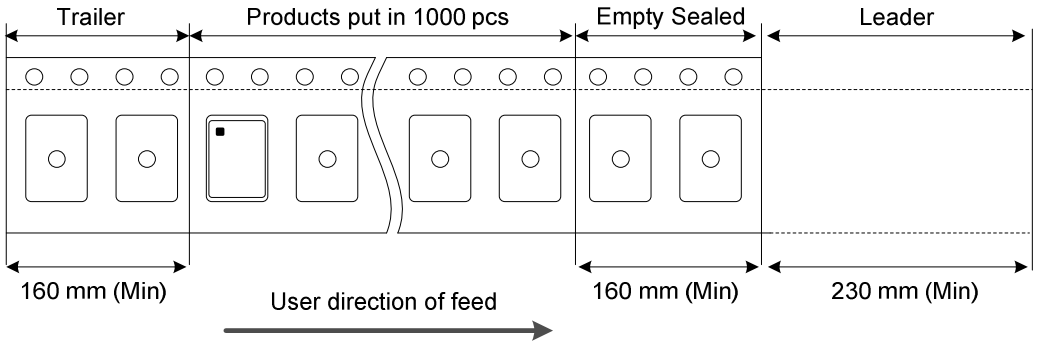

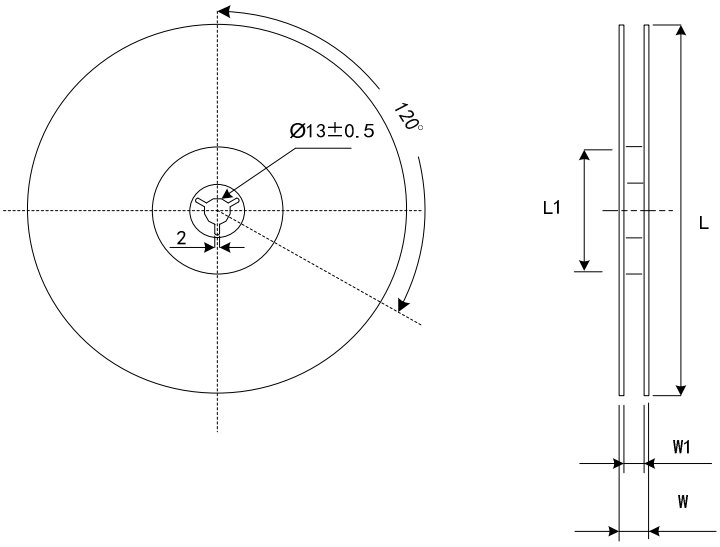

	L	L1	W	W1	
DIMENSIONS	180 ±1.00	62 ±0.50	20.5 ±0.2	16 +1/-0	Standard Reel Quantity is 1,000 pcs per reel (UNIT:mm)

■ RELIABILITY SPECIFICATIONS

1.Mechanical Endurance

No.	Test Item	Test Methods		REF. DOC
1	Drop Test	75 cm height,3 times on concrete floor .		JIS C6701
1	Mechanical Shock	Device are shocked to half sine wave (1000 G) three mutually perpendicular axes each 3 times. 0.5m sec. duration time		MIL-STD-202
1	Vibration	Frequency range Amplitude Sweep time Perpendicular axes each test time	10 ~ 2000 Hz 1.52 mm/20G 20 minutes 4 Hrs (Total test time 12 Hrs)	MIL-STD-883
1	Gross Leak	Standard Sample For Automatic Gross Leak Detector, Test Pressure: 2kg / cm^2		MIL-STD-883
2	Fine Leak	Helium Bombing 4.5 kgf / cm^2 for 2 Hrs		
2	Solderability	Temperature Immersing depth Immersion time Flux	245 ℃ ± 5℃ 0.5 mm minimum 5 ± 1 seconds Rosin resin methyl alcohol solvent (1 : 4)	MIL-STD-883

2.Environmental Endurance

No.	Test Item	Test Methods		REF. DOC
2	Resistance To Soldering Heat	Pre-heat temperature Pre-heat time Test temperature Test time	125 ℃ 60 ~ 120 sec. 260 ± 5 ℃ 10 ± 1 sec.	MIL-STD-202
2	High Temp. Storage	+ 125 ℃ ± 3 ℃ for 1000 ± 12 Hrs		MIL-STD-883
2	Low Temp. Storage	- 40 ℃ ± 3 ℃ for 1000 ± 12 Hrs		
2	Thermal Shock	Total 100 cycles of the following temperature cycle 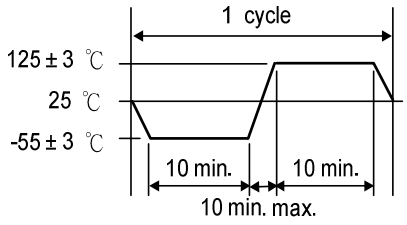		MIL-STD-883
3	Pressure Cooker Storage	121 ± 3℃ , RH100% , 2 bar , 240 Hrs		EIA-JESD22
3	High Temp＆Humidity	85℃ ± 3℃, RH 85% , 1000 Hrs		EIA-JESD22