TXC CORPORATION

4F, NO. 16, Sec. 2 Chung Yang S Rd., Peitou, Taipei, Taiwan.

TEL : 886-2-2894-1202 , 886-2-2895-2201 FAX : 886-2-2894-1206 , 886-2-2895-6207 www.txccorp.com

SPECIFICATION FOR APPROVAL

CUSTOMER	:	
PRODUCT TYPE	:	SMD SEAM SEALING XTAL 5.0 × 3.2
NOMINAL FREQ.	:	19.200000MHz
TXC P/N	:	7B19270002
REVISION	:	A1
CUSTOMER P/N	:	
PM / SALES	:	
DATE	:	

CUSTOMER SIGNATURE & Date

(1) TXC requires one copy returned with signature and title of authorized individual that signifies acceptance of the attached specifications.

(2) Orders received and accepted by TXC after return of signed copy of specification will be produced per these specifications.

(3) Any changes to these specifications must be agreed upon by both parties and new revision of the Product Specification Sheet will be issued.

(4) Any issuance of purchase order prior to consigning back the Approval page of "Specification Sheets" from customers will be regarded as the agreement on the contents of these specifications.

MSL:Level 1
RoHS Compliant

TXC CORPORATION

4F, NO. 16, Sec. 2 Chung Yang S Rd., Peitou, Taipei, Taiwan.

TEL : 886-2-2894-1202 , 886-2-2895-2201 FAX : 886-2-2894-1206 , 886-2-2895-6207 www.txccorp.com

PRODUCT SPECIFICATION SHEET

PRODUCT TYPE	:	SMD SEAM SEALING XTAL 5.0 × 3.2
NOMINAL FREQ.	:	19.200000MHz
TXC P/N	:	7B19270002
REVISION	:	A1

PE/RD	QA	MFG
 Robin Huang	 Samson Xiong	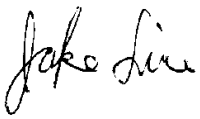 Jake Liu
21-Sep-10	*21-Sep-10*	*21-Sep-10*

NOTE:

(1)Lead Free Products are "Directive 2002/95/EC of The European Parliament of 27 January 2003 on the restriction of the use of certain hazardous substances (RoHS) in electrical and electronic equipment" Compliant (Attachment: SGS Test Report).

(2)Revision "Sx" is for engineering samples only. PE/RD's approval required.

(3)Revision "Ax" is production ready. PE, QA and MFG's approval required

MSL:Level 1
RoHS Compliant

Rev	Revise page	Revise contents	Date	Ref.No.	Reviser
A1	N/A	Initial released	21-Sep-10	N/A	Xiaoyan Jiang

Spec Sheet Contents

No.	Content	Page
1	ELECTRICAL SPECIFICATIONS	P.3
2	FACTORY LOCATION	P.3
3	DIMENSIONS	P.4
4	MARKING	P.4
5	SUGGESTED REFLOW PROFILE & MANUAL SOLDER CONDITION	P.4
6	STRUCTURE ILLUSTRATION	P.5
7	EMBOSS CARRIER TAPE & REEL	P.6
8	PACKING	P.7
9	RELIABILITY SPECIFICATIONS&HANDING CAUTIONS	P.8～9

■ ELECTRICAL SPECIFICATIONS

Standard atmospheric conditions

Unless otherwise specified, the standard range of atmospheric conditions for making measurement and tests are as follow:

Ambient temperature : 25±5℃

Relative humidity : 40%~70%

If there is any doubt about the results, measurement shall be made within the following limits:

Ambient temperature : 25±3℃

Relative humidity : 40%~70%

Measure equipment

Electrical characteristics measured by S&A250B or equivalent.

Crystal cutting type

The crystal is using AT CUT (thickness shear mode).

Unit Weight:

0.046±0.010 g/pcs

	Parameters	SYM.	Electrical Spec.				Notes
			MIN	TYP	MAX	UNITS	
1	Nominal Frequency	FL		19.200000		MHz	-
2	Oscillation Mode	-		Fundamental		-	-
3	Load Capacitance	CL		18		pF	-
4	Frequency Tolerance	-		±30		ppm	at 25 ± 3 ℃
5	Frequency Stability	-		±30		ppm	Over Operating Temp. Range (Reference 25℃)
6	Operating Temperature	-	-20	~	70	℃	-
7	Aging	-		±3		ppm	1st Year
8	Drive Level	DL	-	100	-	uW	-
9	Equivalent Resistance Rr	Rr	-	-	50	Ω	-
10	Shunt Capacitance C0	C0	-	-	5	pF	-
11	Insulation Resistance	-	500	-	-	MΩ	at DC 100V
12	Storage Temperature Range	-	-40	~	85	℃	-

■ FACTORY LOCATION

TXC (NINGBO) CORPORATION

NO.189 Huang Shan West Rd., Beilun District,

Ningbo, Zhejiang, China

■ DIMENSIONS

(Unit:mm)

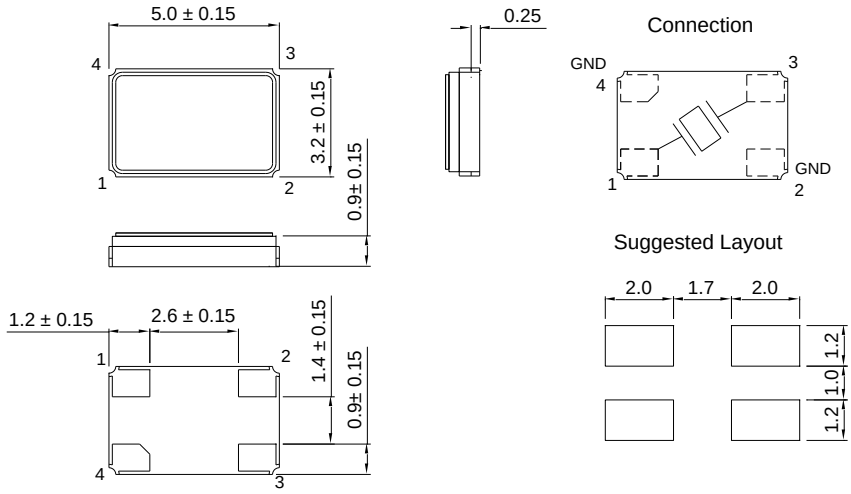

*Coplanarity of solderable areas Camber 0.10 mm Max

■ MARKING

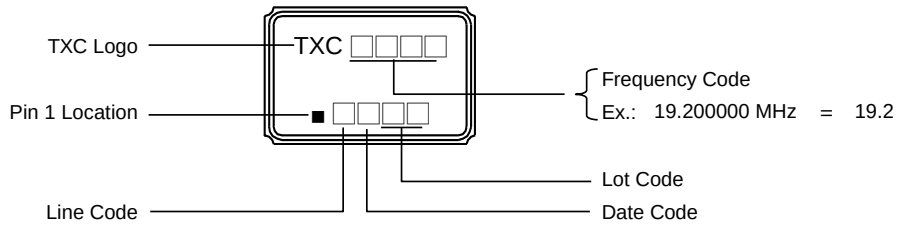

Date Code:

YEAR \ MONTH				JAN	FEB	MAR	APR	MAY	JUN	JUL	AUG	SEP	OCT	NOV	DEC
2005	2009	2013	2017	A	B	C	D	E	F	G	H	J	K	L	M
2006	2010	2014	2018	N	P	Q	R	S	T	U	V	W	X	Y	Z
2007	2011	2015	2019	a	b	c	d	e	f	g	h	j	k	l	m
2008	2012	2016	2020	n	p	q	r	s	t	u	v	w	x	y	z

*This date code will be cycled every four years

■ SUGGESTED REFLOW PROFILE

Solder melting point : 220 ± 10 ℃ , 60 sec. Min.

Peak Temperature: 260 ± 5 ℃ , 10 sec. Max.

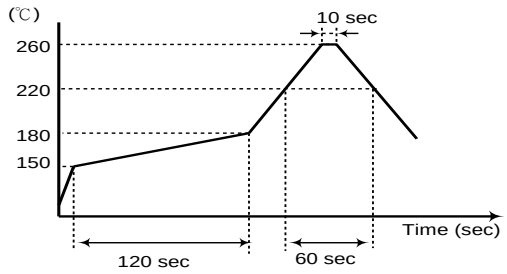

■ SUGGESTED MANUAL SOLDER CONDITION

Temperature: 350 ± 10 ℃

Time: 3 sec.

Re-solder times: twice

STRUCTURE ILLUSTRATION

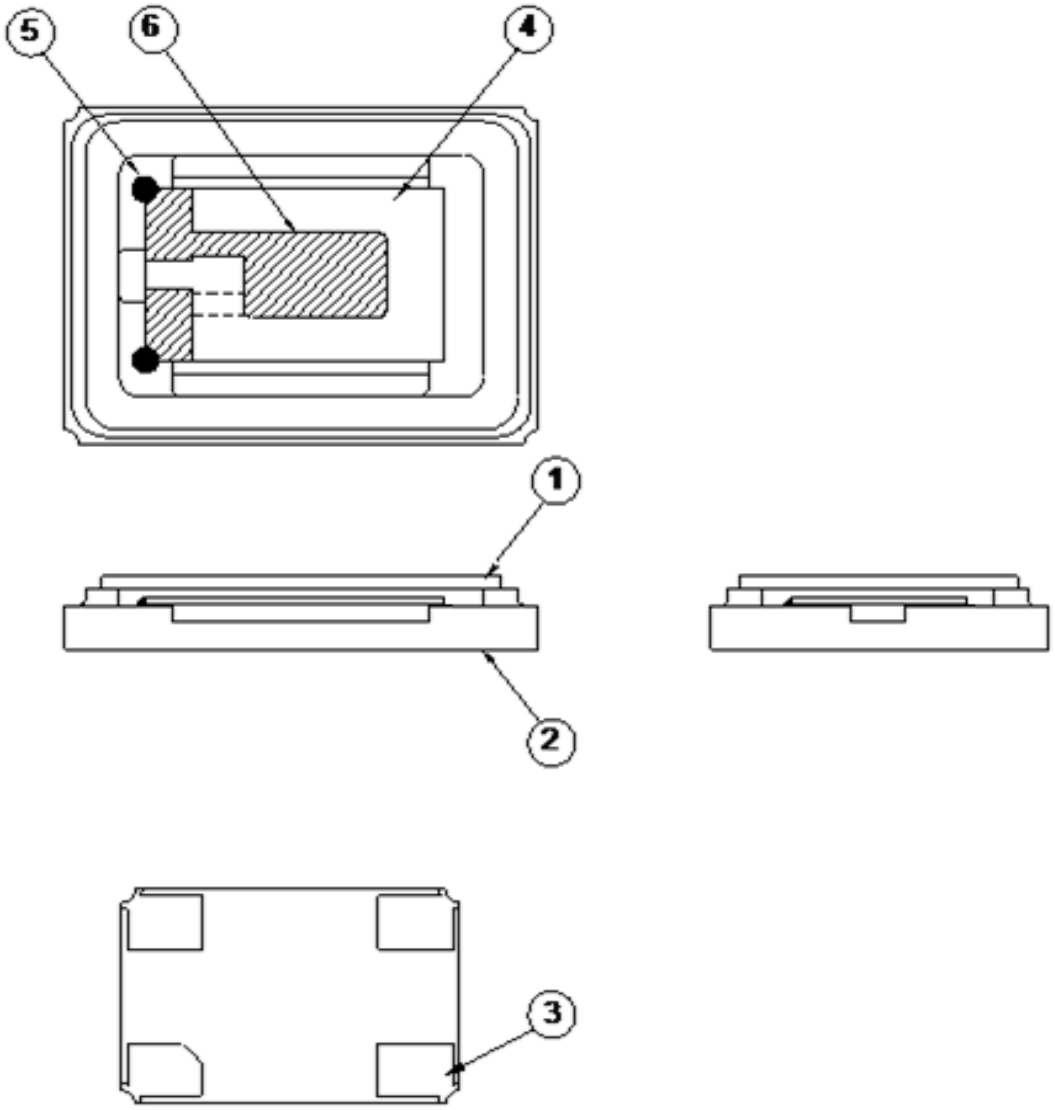

NO	COMPONENTS	MATERIALS	FINISH/SPECIFICATIONS
1	Lid	Kovar (Fe/Co/Ni)	-
2	Package	Ceramic (Al_2O_3) + Kovar (Fe/Co/Ni)	-
3	PAD	Au	Tungsten metalize + Ni plating + Au plating
4	Crystal blank	SiO_2	-
5	Conductive adhesive	Resin + Ag	-
6	Electrode	Ag	-

EMBOSS CARRIER TAPE & REEL

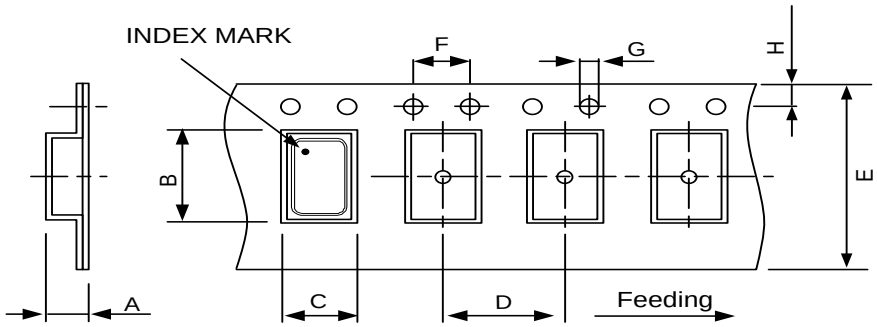

DIMENSIONS	A	B	C	D	E	F	G	H	
	1.65±0.10	5.40±0.10	3.50±0.10	8.00±0.10	12.00±0.30	4.00±0.10	1.55±0.10	1.75±0.10	(UNIT：mm)

REMARK :

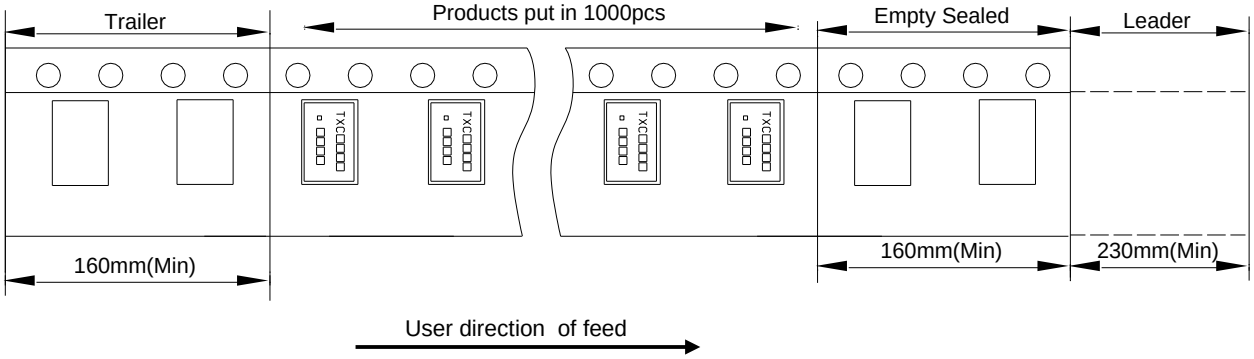

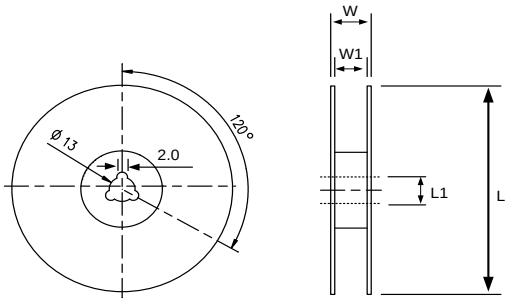

DIMENSIONS	L	L1	W	W1	
	180±1.00	13±0.50	16.5±0.20	12±0.10	(UNIT：mm)

■PACKING

Reel Quantity :
1. Reel X 5 (5 Reels x 1)
2. Reel X 10 (10 Reels x 1)
3. Reel X 20 (10 Reels x 2)
4. Reel X 40 (10 Reels x 4)

Box Size:
1. L200 X W200 X H140mm
2. L200 X W200 X H250mm
3. L400 X W200 X H250mm
4. L400 X W400 X H280mm

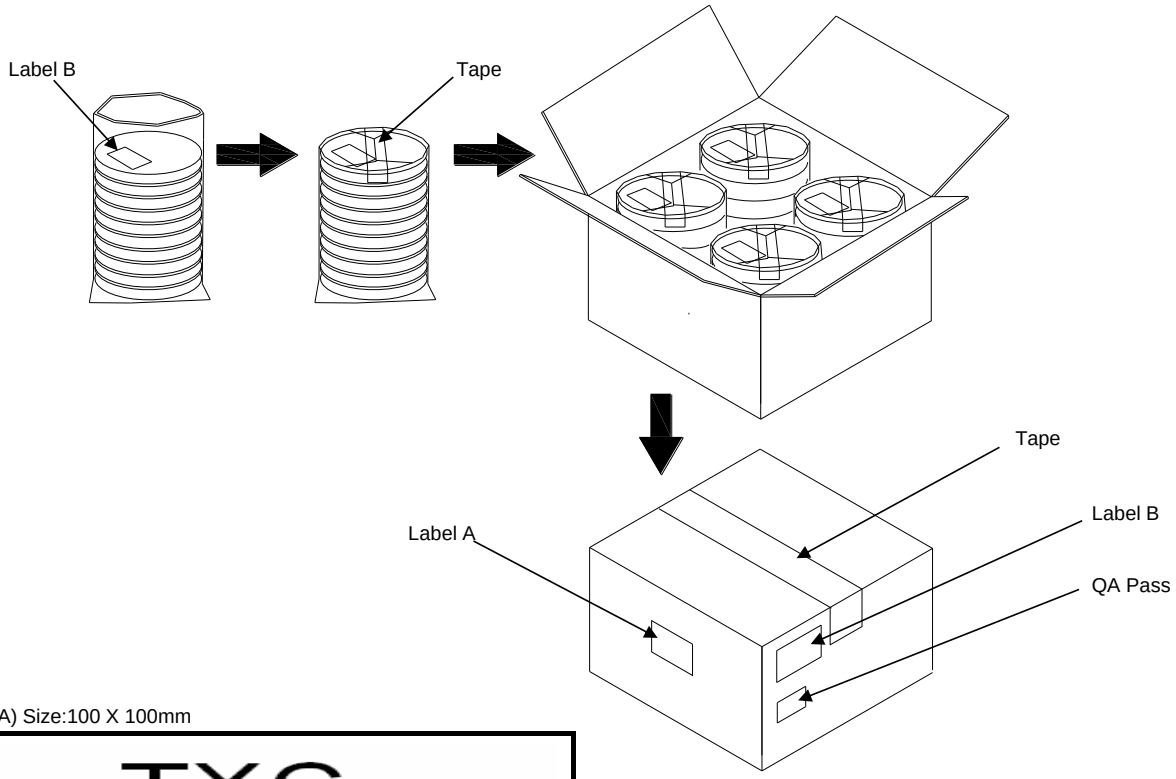

(Label A) Size:100 X 100mm

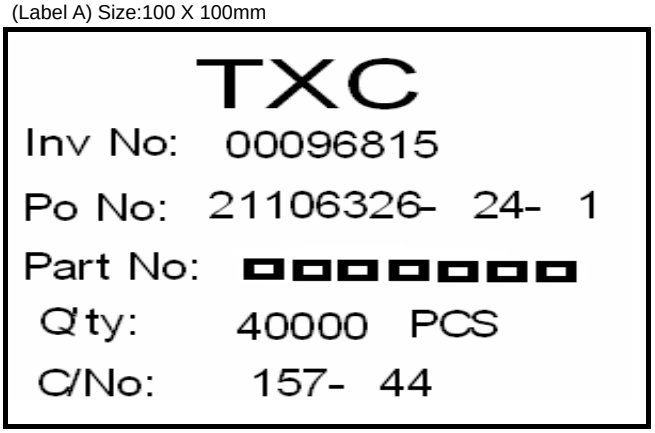

(Label B) Size:80 X 40mm

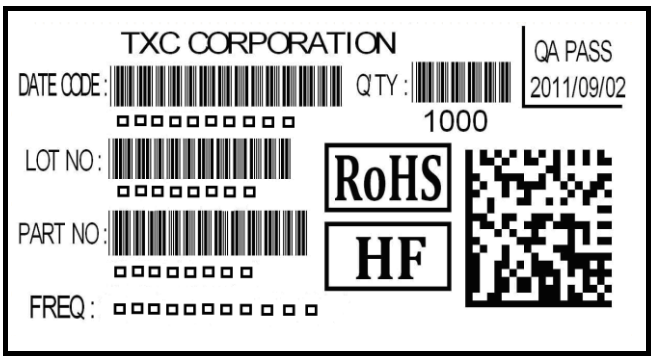

[STORAGE]

1.The storage time to be 1 year maximum.

2.Don't be caught in the rain.

3.The storage environment shall be 5℃ ~40℃ temperature and 30% ~ 75%RH humidity and free from the sun shine.

4.If customers have special requirements, we can paste labels according to it.

■ RELIABILITY SPECIFICATIONS

1.Mechanical Endurance

No.	Test Item	Test Methods		Test Criteria
1.1	Drop Test	75 cm height,3 times on concrete floor .		A・C
1.2	Mechanical Shock	Device are shocked to half sine wave (1000 G) three mutually perpendicular axes each 3 times. 0.5 ms duration time		A・C
1.3	Vibration	Frequency range Amplitude Sweep time Perpendicular axes each test time	10 ~ 2000 Hz 1.52 mm/20G 20 minutes 4 Hrs (Total test time 12 Hrs)	A・C
1.4	Solderability	Temperature Immersing depth Immersion time Flux	245 ℃ ± 5℃ 0.5 mm minimum 5 ± 1 seconds Rosin resin methyl alcoh solvent (1 : 4)	E

2.Environmental Endurance

No.	Test Item	Test Methods		Test Criteria
2.1	Resistance To Soldering Heat	Pre-heat temperature Pre-heat time Test temperature Test time	125 ℃ 60 ~ 120 sec. 260 ± 5 ℃ 10 ± 1 sec.	B・C・D
2.2	High Temp. Storage	+ 125 ℃ ± 3 ℃ for 500 ± 12 Hrs		B・C・D
2.3	Low Temp. Storage	- 40 ℃ ± 3 ℃ for 500 ± 12 Hrs		B・C・D
2.4	Temperature cycle	Total 100 cycles of the following temperature cycle 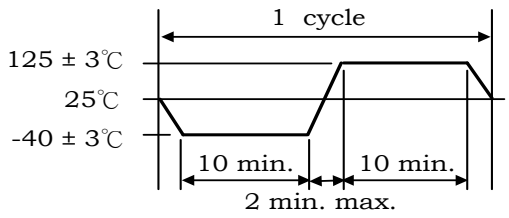		B・C・D
2.5	High Temp＆Humidity	85℃ ± 3℃ , RH 85% , 500 Hrs		B・C・D

RELIABILITY SPECIFICATIONS

	Specifications
A	Frequency change: Within ±5ppm or in customer's specification.
B	Frequency change: Within ±10ppm or in customer's specification.
C	Equivalent series resistance(E.S.R) change: Within ±15% or 10Ω(larger value).
D	After conditioning , quartz crystal units shall be subjected to standard atmospheric conditions for 2 hour, and measured.
E	Minimum 95% of immersed terminal shall be covered with new uniform solder.

Measurement condition

Electrical characteristics measured by S&A250B or equivalent.