TXC CORPORATION

5F, NO. 16, Sec. 2 Chung Yang S Rd., Peitou, Taipei, Taiwan.

TEL : 886-2-2894-1202 , 886-2-2895-2201 FAX : 886-2-2894-1206 , 886-2-2895-6207 www.txccorp.com

SPECIFICATION FOR APPROVAL

CUSTOMER	:	
PRODUCT TYPE	:	HC-49/S
NOMINAL FREQ.	:	12.000000MHz
TXC P/N	:	9B12000616
REVISION	:	A1
CUSTOMER P/N	:	
PM / SALES	:	
DATE	:	

CUSTOMER SIGNATURE & Date

(1) TXC requires one copy returned with signature and title of authorized individual that signifies acceptance of the attached specifications.

(2) Orders received and accepted by TXC after return of signed copy of specification will be produced per these specifications.

(3) Any changes to these specifications must be agreed upon by both parties and new revision of the Product Specification Sheet will be issued.

(4) Any issuance of purchase order prior to consigning back the Approval page of "Specification Sheets" from customers will be regarded as the agreement on the contents of these specifications.

Attachment: Product Specification Sheet

1
2
3
4
5

RoHS Compliant

TXC CORPORATION

5F, NO. 16, Sec. 2 Chung Yang S Rd., Peitou, Taipei, Taiwan.

TEL : 886-2-2894-1202 , 886-2-2895-2201 FAX : 886-2-2894-1206 , 886-2-2895-6207 www.txccorp.com

PRODUCT SPECIFICATION SHEET

PRODUCT TYPE	:	HC-49/S
NOMINAL FREQ.	:	12.000000MHz
TXC P/N	:	9B12000616
REVISION	:	A1

PE/RD	QA	MFG
Simon Wang		Shu-Chen ko
2007/4/5	***2007/4/5***	***2007/4/5***

NOTE:

(1)Lead Free Products are "Directive 2002/95/EC of The European Parliament of 27 January 2003 on the restriction of the use of certain hazardous substances (RoHS) in electrical and electronic equipment" Compliant (Attachment: SGS Test Report).

(2)Revision "Sx" is for engineering samples only. PE/RD's approval required.

(3)Revision "Ax" is production ready. PE, QA and MFG's approval required

RoHS Compliant

Rev	Revise page	Revise contents	Date	Ref.No.	Reviser
A1	N/A	Initial Released	2007/3/13	N/A	Shu-Chen Ko

CONTENT

SPECIFICATIONS	PAGE
• ELECTRICAL SPECIFICATIONS	4
• DIMENSIONS	5
• MARKING	6
• PACKING	7
• RELIABILITY SPECIFICATIONS	8

ATTACHMENT(S) (optional)

TESTING DATA

- ELECTRICAL CHARACTERISTICS TEST — A ☐ YES ☑ NO
- TEMPERATURE CHARACTERISTICS TEST — B ☐ YES ☑ NO

ELECTRICAL SPECIFICATIONS

Standard atmospheric conditions

Unless otherwise specified, the standard range of atmospheric conditions for making measurement and tests are as follow:

Ambient temperature : 25+/-5°C

Relative humidity : 40%~70%

If there is any doubt about the results, measurement shall be made within the following limits:

Ambient temperature : 25+/-1°C

Relative humidity : 40%~70%

Measure equipment

SAUNDERS 250A/250B CRYSTAL IMPEDANCE METER.

Crystal cutting type

The crystal is using AT CUT (thickness shear mode).

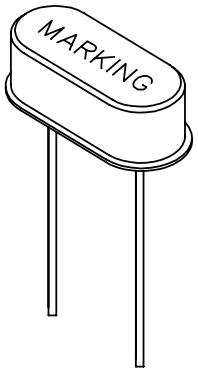

please refer to marking code page

1.	Nominal Frequency	12.000000 MHz
2.	Oscillation Mode	Fundamental
3.	Load Capacitance	16.0 pF
4.	Frequency Tolerance (25 °C)	+/- 30 ppm
5.	Effective Series Resistance	50 Ohms Max.
6.	Shunt Capacitance (C0)	7.0 pF Max.
7.	Motional Capacitance (C1)	N/A fF
8.	Drive Level	100 uW Typ.
9.	Operation Temperature Range	-10 °C ~ +70 °C
10.	Stability Over Temperature Range	+/- 30 ppm (related to 25 °C)
11.	Insulation Resistance	500 MOhms Min. at DC 100V
12.	Attenuation of Spurious Frequency Amplitude	N/A
13.	Ratio of Holder to Motional (C0/1)	N/A
14.	Storage Temperature	-40 °C ~ +85 °C
15.	Aging	+/- 5.0 ppm / year.
16.	Weight	0.56 g +/- 0.05g

DIMENSIONS

UNIT:mm

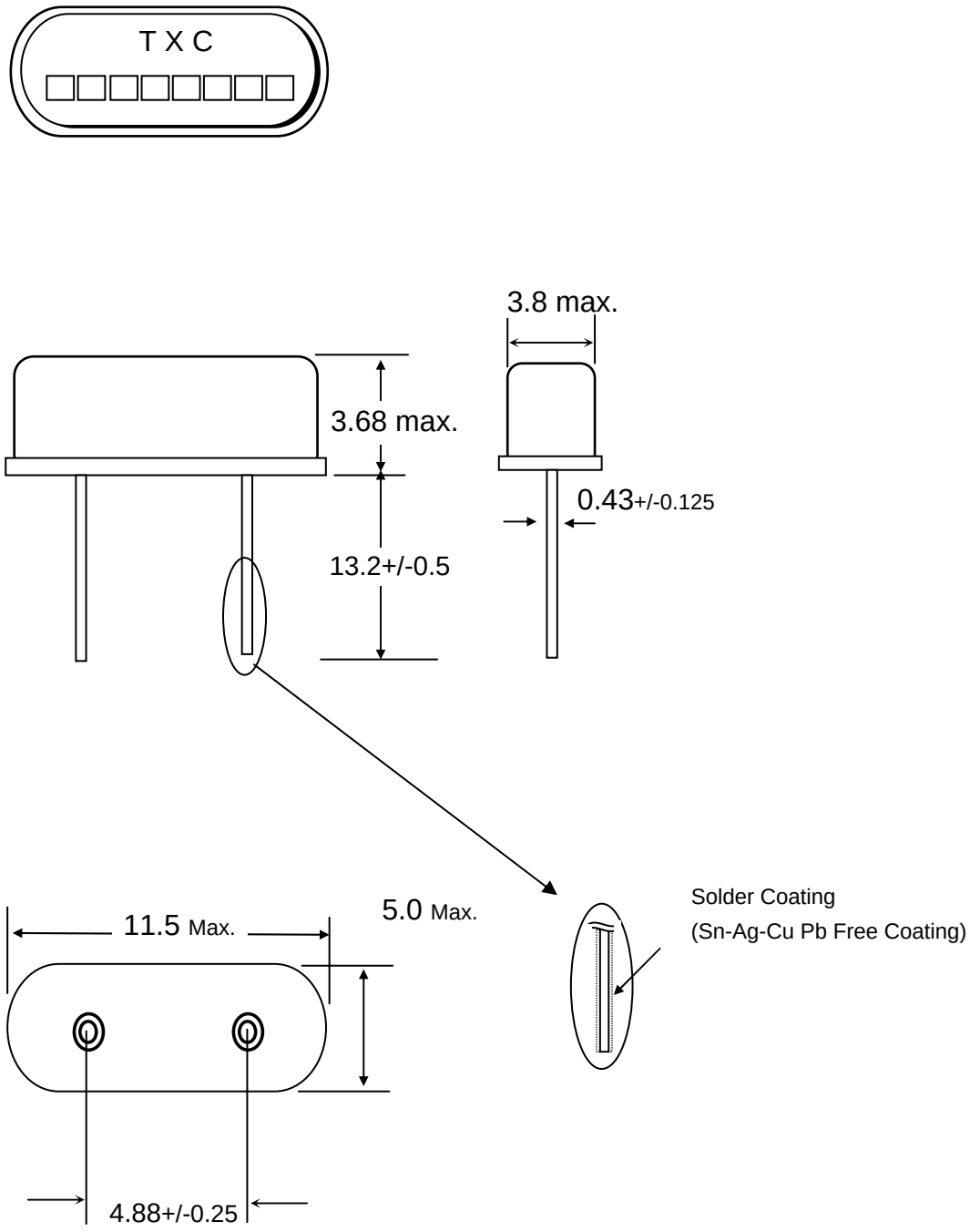

MARKING

Marking For Pb Free Parts：

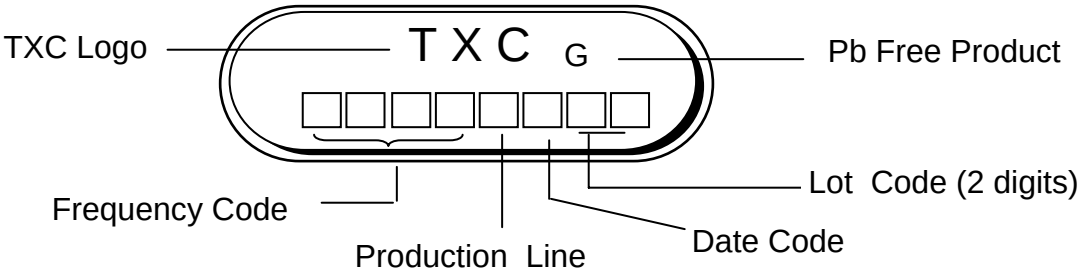

Date Code:

YEAR \ MONTH	JAN	FEB	MAR	APR	MAY	JUN	JUL	AUG	SEP	OCT	NOV	DEC
2001 2005 2009 2013 2017	A	B	C	D	E	F	G	H	J	K	L	M
2002 2006 2010 2014 2018	N	P	Q	R	S	T	U	V	W	X	Y	Z
2003 2007 2011 2015 2019	a	b	c	d	e	f	g	h	j	k	l	m
2004 2008 2012 2016 2020	n	p	q	r	s	t	u	v	w	x	y	z

*This date code will be cycled every four years.

For example： Marking



→

Introduction： Pb Free Product
49S 12.000 MHz
Made in 2006/JAN. 01Lot

Packing For Pb Free Parts ：

1.INNER BOX：(Unit：mm)

5bagx200pcs
=1000pcs/box

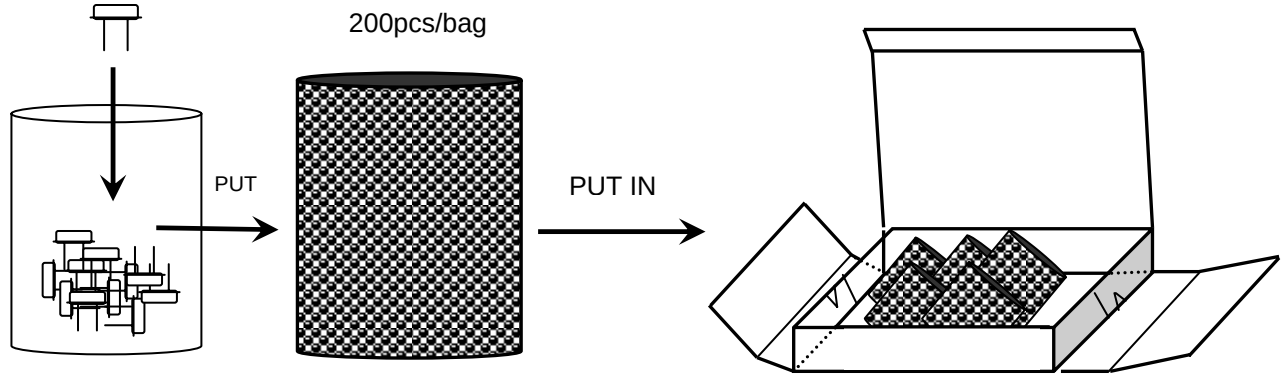

2.LOGO STICKER(CARTON and INNER BOX)：(Unit：mm)

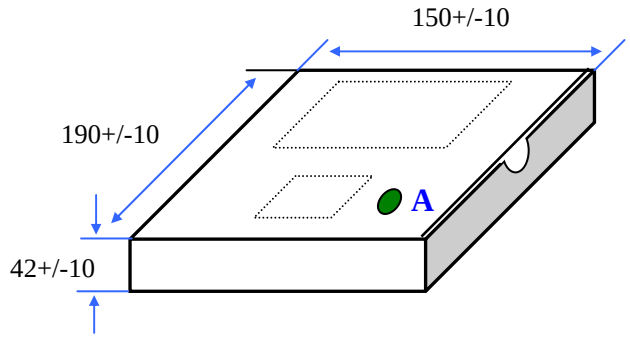

PUT IN

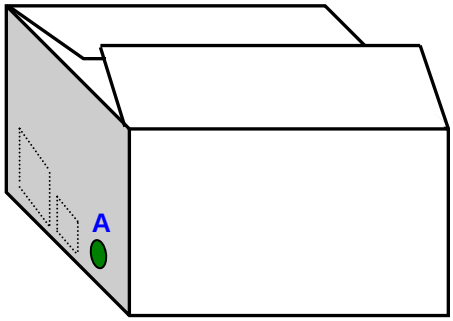

Label A

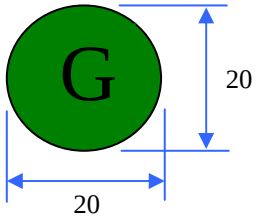

(1) Put in stuff between space.
(2) Tie Up the Carton with 4 Packthreads.
(3) "G" ： Pb-Free Product

RELIABILITY SPECIFICATIONS

No.	TEST ITEM	TEST METHODS	TEST CRITERIA	REF. DOC
1	Drop Test	50 cm Height, Fall freely onto firm wood for 3 Times.	dF/F<+/-5ppm dRs<+/-10%	JIS C6701
2	Fine Leak	Helium Bombing 5Kgf / cm^2 for 2 Hours .	Leak Rate Less Than $2x10^{-8}$ atm.cc/sec	MIL-STD-883E Method 1014.10
3	Gross Leak	125°C FC#40 ,120 Seconds.	No Continuous Bubble .	MIL-STD-883E Method 1014.10
4	Mechanical Shock	Device are shocked to half sine wave (1000 G) three mutually perpendicular axes each 3 times.	dF/F<+/-5ppm dRs<+/-10%	MIL-STD-202F
5	Vibration	Frequency range 10 ~ 55 Hz Amplitude 10G Sweep Time 1 minute Test Time X,Y,Z Plan,each 2 hrs.	dF/F<+/-5ppm dRs<+/-10%	MIL-STD-883E Method 2007.3
6	Solderability	Temperature 235 °C +/- 5 °C Immersing depth 0.5 mm minimum Immersion time 5 +/- 0.5 seconds Flux Rosin resin methyl alcohol solvent (1 : 4)	Check by Microscope At Least 95% Coated	MIL-STD-883E Method 2003.7
7	Resistance To Soldering Heat	Test Temperature 260 °C +/- 5 °C Test Time 10 +/- 1 sec.	dF/F<+/-5ppm dRs<+/-10%	MIL-STD-202F Method 210D
8	Terminal Strength	2.5mm From terminal , bend 90°,3 times.	Lead without crack or broken.	MIL-STD-202F Method 208F
9	Thermal Shock	Total 5 cycles of the following temperature cycle 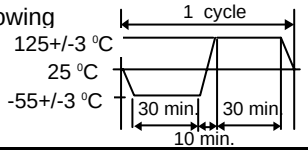	dF/F<+/-5ppm dRs<+/-10%	MIL-STD-883E Method 1011.8

Measure in room temperature after each tests.