SERIES NO: VER A

SPECIFICATION FOR APPROVAL

CUSTOMER	
PRODUCT TYPE	SMD GLASS SEALING XTAL 5.0*3.2
NOMINAL FREQ.	24.576000 MHz
TXC P/N	7A24500022
CUSTOMER P/N	
ISSUE DATE	04/01/2009

CUSTOMER'S APPROVAL

(Please return one copy with approval)

APPROVED	QA
Michael	*Steve*

TXC CORPORATION

5F, NO. 16, Sec. 2 Chungyang S Rd.,
Peitou, Taipei, Taiwan, R. O. C..
TEL : 886-2-2894-1202 , 886-2-2895-2201
FAX : 886-2-2894-1206 , 886-2-2895-6207
www.txc.com.tw

SMD QUARTZ CRYSTAL UNIT

(7A SERIES) SMD GLASS SEALING PACKAGE

PREPARED	APPROVED	QA
BRUCE	MICHAEL	LOUIS

CONTENT

SPECIFICATIONS PAGE

- ELECTRICAL SPECIFICATIONS 2
- DIMENSIONS 3
- MARKING 4
- SUGGESTED REFLOW PROFILE
- RELIABILITY SPECIFICATIONS 5
- PACKING 6

ATTACHMENT(S) (optional)

TESTING DATA

- ELECTRICAL CHARACTERISTICS TEST A ☐ YES ☑ NO
- TEMPERATURE CHARACTERISTICS TEST B ☐ YES ☑ NO

SMD QUARTZ CRYSTAL UNIT

(7A SERIES) SMD GLASS SEALING PACKAGE

PREPARED	APPROVED	QA
BRUCE	MICHAEL	LOUIS

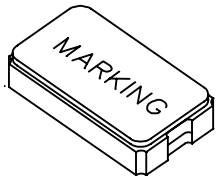

* The detail marking spec. please refer to marking code page

ELECTRICAL SPECIFICATIONS

1	Nominal Frequency	24.576000 MHz
2	Oscillation Mode	Fundamental
3	Load Capacitance	16 pF
4	Tolerance of Center Frequency	+/- 30 ppm at 25 ^{o}C+/-3°C
5	Center Frequency Drift	+/- 30 ppm With Working Temperature
6	Working Temperature Range	-10°C~+70°C
7	Aging	5 ppm / year
8	Circuit	Measured by HP E5100A
9	Drive Level	50 uW Max.
10	Effective Resistance Rr	50 ohms. Max.
11	Shunt Capacitance C0	5 pF Max.
12	Motional Capacitance C1	NA
13	Insulation Resistance	More Than 500 Mohms at DC 100V
14	Storage Temperature Range	-40°C~+85°C

SMD QUARTZ CRYSTAL UNIT

(7A SERIES) SMD GLASS SEALING PACKAGE

PREPARED	APPROVED	QA
BRUCE	MICHAEL	LOUIS

DIMENSIONS

UNIT:mm

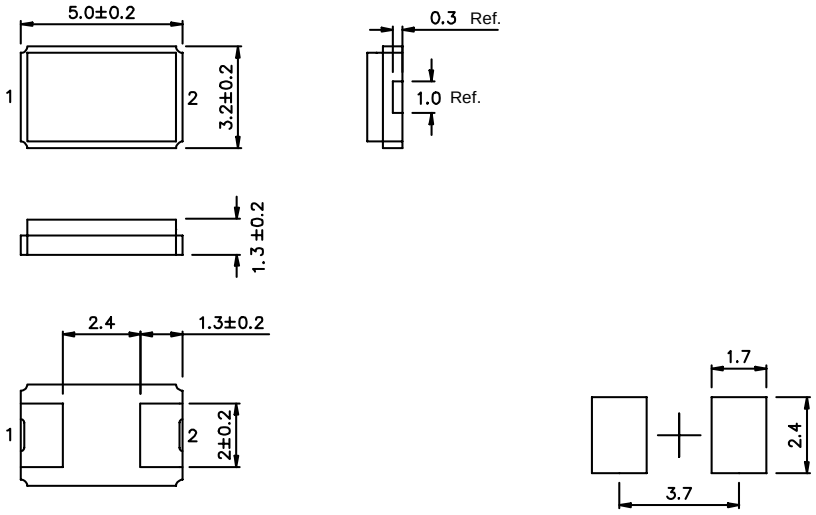

SMD QUARTZ CRYSTAL UNIT

(7A SERIES) SMD GLASS SEALING PACKAGE

PREPARED	APPROVED	QA
BRUCE	CHARLIE	LOUIS

MARKING

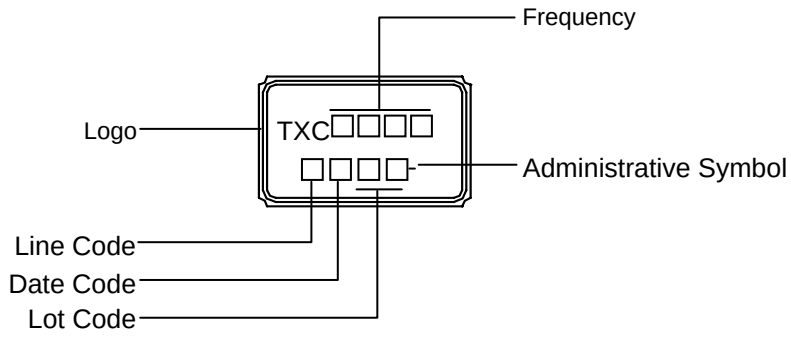

Date Code:

YEAR \ MONTH	JAN	FEB	MAR	APR	MAY	JUN	JUL	AUG	SEP	OCT	NOV	DEC
2001	2005	2009	2013	2017	A	B	C	D	E	F	G	H	J	K	L	M
2002	2006	2010	2014	2018	N	P	Q	R	S	T	U	V	W	X	Y	Z
2003	2007	2011	2015	2019	a	b	c	d	e	f	g	h	j	k	l	m
2004	2008	2012	2016	2020	n	p	q	r	s	t	u	v	w	x	y	z

This date code will be cycled every four years

Example: TXC 14.3 / AN01

14.3181818MHz : 14.318

A LINE, 2002 YEAR JAN, 01 LOT : AN01

SUGGESTED REFLOW PROFILE

Total time : 200 sec. Max.

Solder melting point :185 ^{o}C

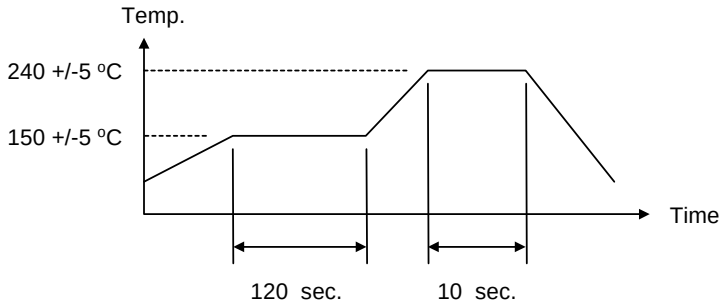

SMD QUARTZ CRYSTAL UNIT

(7A SERIES) SMD GLASS SEALING PACKAGE

PREPARED	APPROVED	QA
BRUCE	MICHAEL	LOUIS

RELIABILITY SPECIFICATIONS

No.	Test Item	Test Methods		
1	Drop Test	75 cm height, fall freely onto stainless plate 3 times.		JIS C6701
2	Mechanical Shock	Device are shocked to half sine wave (1000 G) three mutually pendicular axes each 3 times. 0.5m sec. duration time		MIL-STD-202F
3	Vibration	Frequency range Amplitude Sweep time Pendicular axes each test time	10 ~ 2000 Hz 1.52 mm 20 minute 4 hours (Total test time 12 hours)	MIL-STD-883E
4	Solderability	Temperature Immersing depth Immersion time Flux	215 °C +/- 5 °C 0.5 mm minimum 10 +/- 0.5 seconds Rosin resin methyl alcohol solvent (1 : 4)	MIL-STD-883E
5	Resistance To Soldering Heat	Pre-heat temperature Pre-heat time Test temperature Test time	125 °C 60 ~ 120 sec. 260 +/- 5 °C 5 +/- 1 sec.	MIL-STD-202F
6	High Temp. Storage	+ 125 °C +/- 2 °C for 1000 +/- 12 hours		MIL-STD-883E
7	Low Temp. Storage	- 40 °C +/- 2 °C for 1000 +/- 12 hours		
8	Thermal Shock	Total 10 cycles of the following temperature cycle 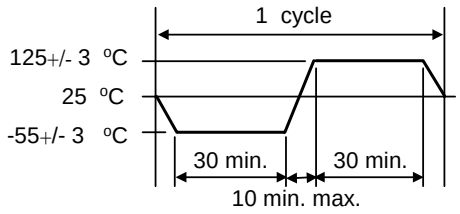 		MIL-STD-883E

PACKING : (EIA-481-2)

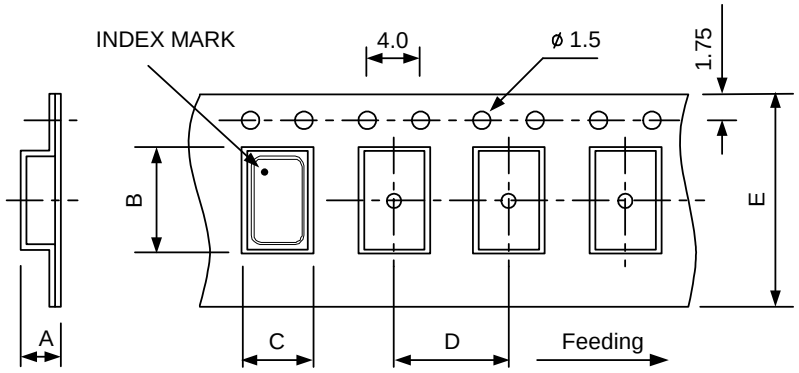

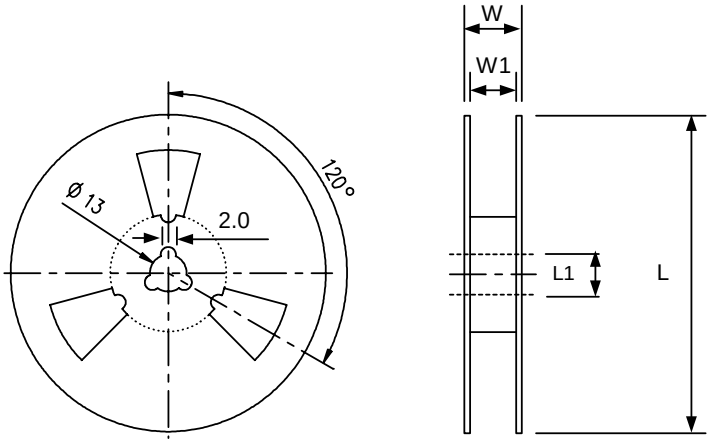

UNIT : mm

DIMENSIONS	A	B	C	D	E	L	L1	W	W1	pcs / Reel
	1.46	5.5	3.6	8.0	12	180	13	15.4	13	1K

" Standard Reel Quantity is 1,000 pcs per reel "

REMARK :

1. 230 mm (9.05) minimum leader which consist of carrier and/or tape followed by a minimum of 160 mm (6.3) of empty carrier tape sealed with cover tape.

2. 160 mm (6.3) minimum trailer of empty carrier tape sealed with cover tape.



TXC CORPORATION