TXC CORPORATION

5F, NO. 16, Sec. 2 Chung Yang S Rd., Peitou, Taipei, Taiwan.

TEL : 886-2-2894-1202 , 886-2-2895-2201 FAX : 886-2-2894-1206 , 886-2-2895-6207 www.txccorp.com

SPECIFICATION FOR APPROVAL

CUSTOMER	:	
PRODUCT TYPE	:	HC-49/S SMD
NOMINAL FREQ.	:	12.000000MHz
TXC P/N	:	9C12000378
REVISION	:	A1
CUSTOMER P/N	:	
PM / SALES	:	
DATE	:	

CUSTOMER SIGNATURE & Date

(1) TXC requires one copy returned with signature and title of authorized individual that signifies acceptance of the attached specifications.

(2) Orders received and accepted by TXC after return of signed copy of specification will be produced per these specifications.

(3) Any changes to these specifications must be agreed upon by both parties and new revision of the Product Specification Sheet will be issued.

(4) Any issuance of purchase order prior to consigning back the Approval page of "Specification Sheets" from customers will be regarded as the agreement on the contents of these specifications.

Attachment: Product Specification Sheet

1
2
3
4
5

RoHS Compliant

TXC CORPORATION

5F, NO. 16, Sec. 2 Chung Yang S Rd., Peitou, Taipei, Taiwan.

TEL : 886-2-2894-1202 , 886-2-2895-2201 FAX : 886-2-2894-1206 , 886-2-2895-6207 www.txccorp.com

PRODUCT SPECIFICATION SHEET

PRODUCT TYPE	:	HC-49/S SMD
NOMINAL FREQ.	:	12.000000MHz
TXC P/N	:	9C12000378
REVISION	:	A1

PE/RD	QA	MFG
Simon Wang		Shu-Chen Ko
2007/9/6	*2007/9/6*	*2007/9/6*

NOTE:

(1)Lead Free Products are "Directive 2002/95/EC of The European Parliament of 27 January 2003 on the restriction of the use of certain hazardous substances (RoHS) in electrical and electronic equipment" Compliant (Attachment: SGS Test Report).

(2)Revision "Sx" is for engineering samples only. PE/RD's approval required.

(3)Revision "Ax" is production ready. PE, QA and MFG's approval required

RoHS Compliant

Rev	Revise page	Revise contents	Date	Ref.No.	Reviser
A1	N/A	Initial Released	2006/9/22	N/A	Shu-Chen Ko

CONTENT

SPECIFICATIONS	PAGE
• ELECTRICAL SPECIFICATIONS	4
• DIMENSIONS	5
• SUGGESTED REFLOW PROFILE	5
• MARKING	6
• PACKING	7
• RELIABILITY SPECIFICATIONS	8

ATTACHMENT(S) (optional)

TESTING DATA

- ELECTRICAL CHARACTERISTICS TEST — A ☐ YES ☑ NO
- TEMPERATURE CHARACTERISTICS TEST — B ☐ YES ☑ NO

ELECTRICAL SPECIFICATIONS

Standard atmospheric conditions

Unless otherwise specified, the standard range of atmospheric conditions for making measurement and tests are as follow:

Ambient temperature : 25+/-5°C

Relative humidity : 40%~70%

If there is any doubt about the results, measurement shall be made within the following limits:

Ambient temperature : 25+/-1°C

Relative humidity : 40%~70%

Measure equipment

SAUNDERS 250A/250B CRYSTAL IMPEDANCE METER.

Crystal cutting type

The crystal is using AT CUT (thickness shear mode).

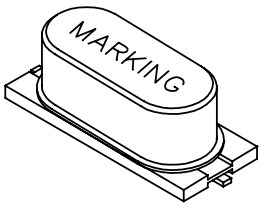

please refer to marking code page

1.	Nominal Frequency	12.000000 MHz
2.	Oscillation Mode	Fundamental
3.	Load Capacitance	32.0 pF
4.	Frequency Tolerance (25 °C)	+/- 30 ppm
5.	Effective Series Resistance	30 Ohms Max.
6.	Shunt Capacitance (C0)	7.0 pF Max.
7.	Motional Capacitance (C1)	N/A
8.	Drive Level	10 uW Typ.
9.	Operation Temperature Range	-20 °C ~ +70 °C
10.	Stability Over Temperature Range	+/- 50 ppm (related to 25 °C)
11.	Insulation Resistance	500 MOhms Min. at DC 100V
12.	Attenuation of Spurious Frequency Amplitude	N/A
13.	Ratio of Holder to Motional (C0/1)	N/A
14.	Storage Temperature	-40 °C ~ +85 °C
15.	Aging	+/- 5.0 ppm/year
16.	Weight	0.58 g +/- 0.05g

DIMENSIONS

UNIT:mm

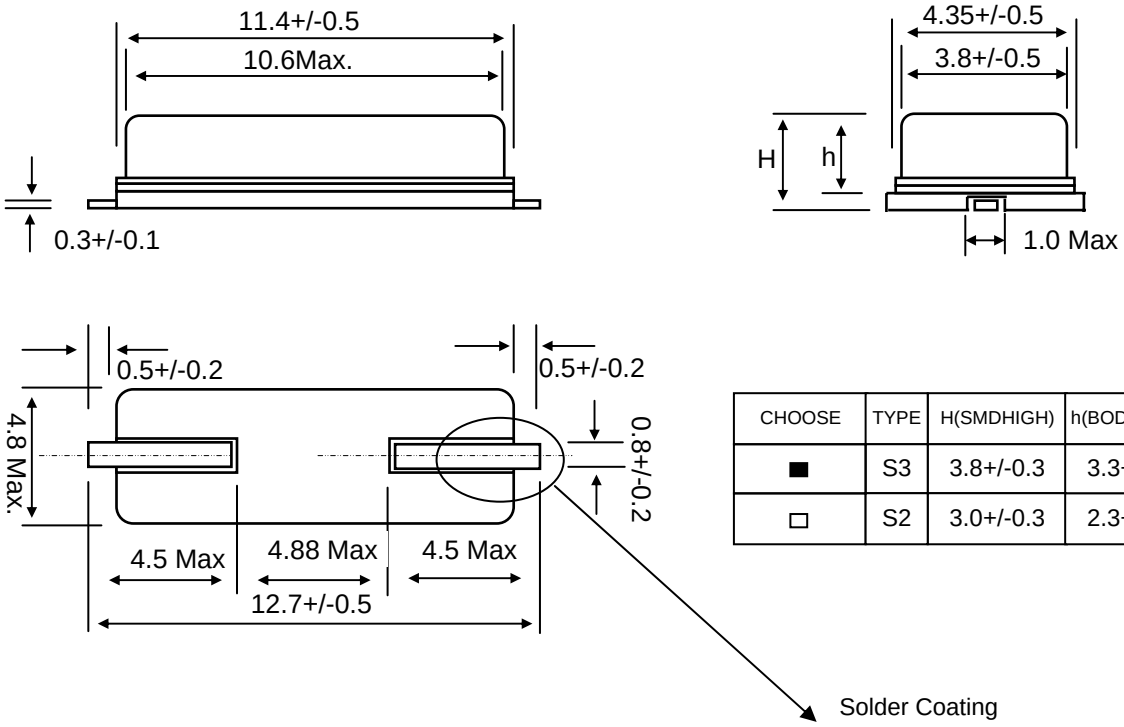

CHOOSE	TYPE	H(SMDHIGH)	h(BODY HIGH)
■	S3	3.8+/-0.3	3.3+/-0.3
□	S2	3.0+/-0.3	2.3+/-0.3

Suggested Layout

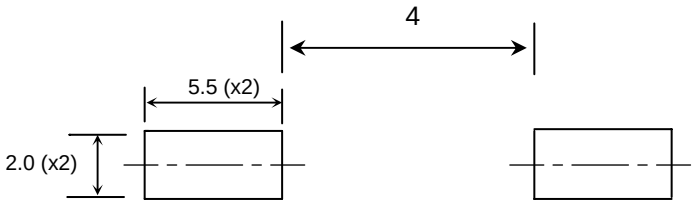

SUGGESTED REFLOW PROFILE

Total time : 200 sec. Max.

Solder melting point :220 °C

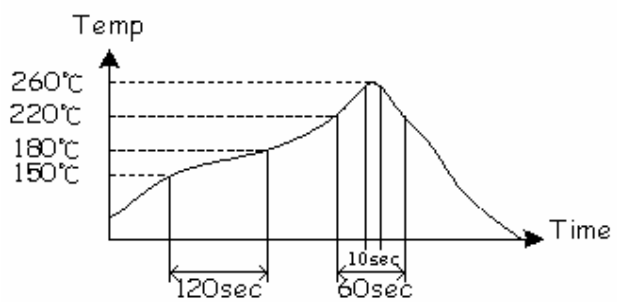

MARKING

Marking For Pb Free Parts：

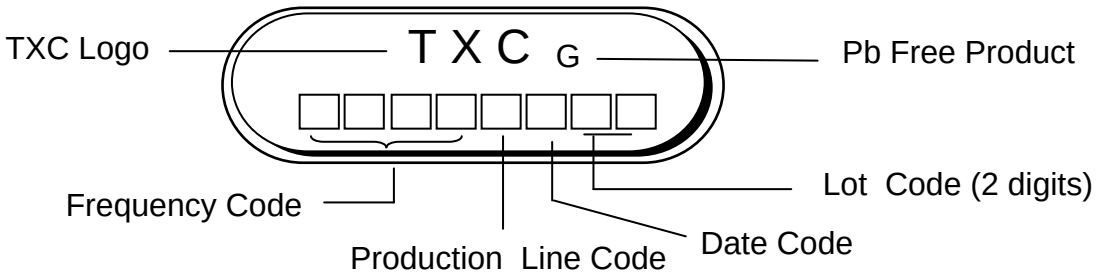

Date Code:

YEAR \ MONTH					JAN	FEB	MAR	APR	MAY	JUN	JUL	AUG	SEP	OCT	NOV	DEC
2001	2005	2009	2013	2017	A	B	C	D	E	F	G	H	J	K	L	M
2002	2006	2010	2014	2018	N	P	Q	R	S	T	U	V	W	X	Y	Z
2003	2007	2011	2015	2019	a	b	c	d	e	f	g	h	j	k	l	m
2004	2008	2012	2016	2020	n	p	q	r	s	t	u	v	w	x	y	z

*This date code will be cycled every four years.

For example： Marking



Introduction： Pb Free Product
49S 12.000 MHz
Made in NGB 2006/JAN 01Lot

(A) Tape and reel configuration:(Unit：mm)

(a) Emboss taping configuration. (per EIA-481-2)

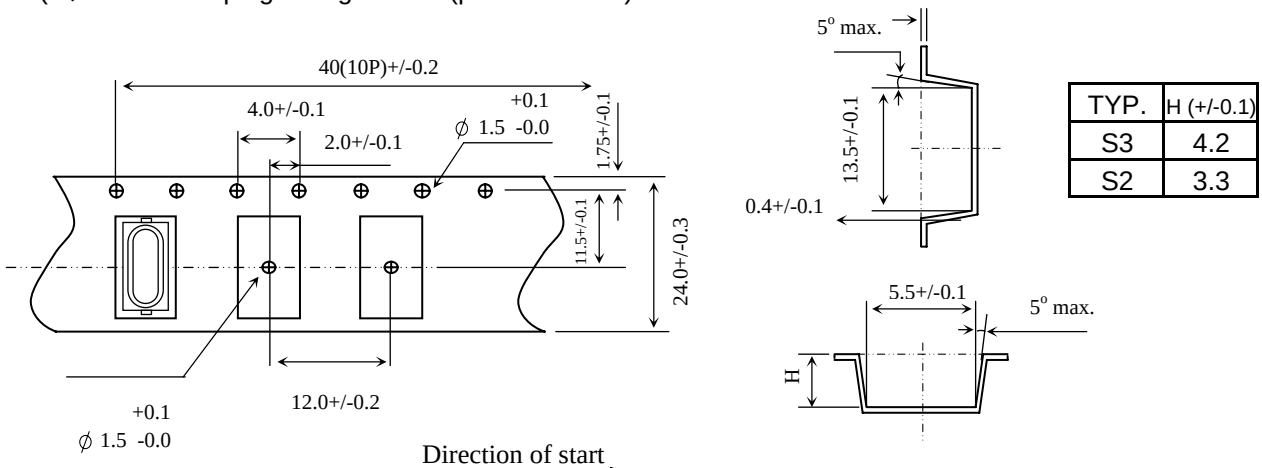

TYP.	H (+/-0.1)
S3	4.2
S2	3.3

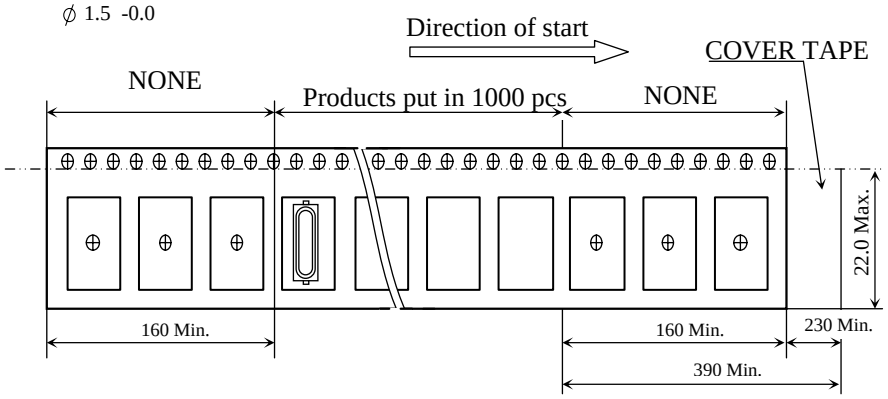

(b) Reel configuration.

(B) Packing & Label :(Unit：mm)

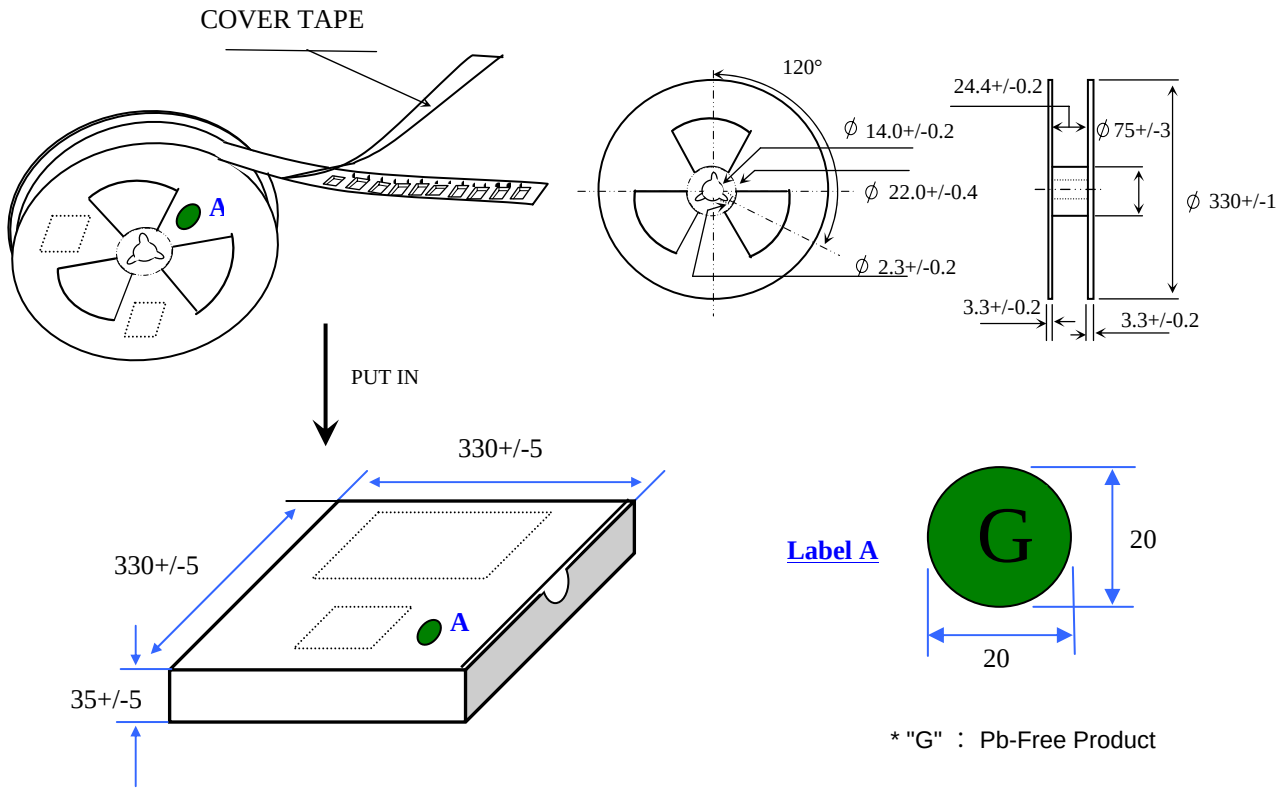

Label A

* "G" ： Pb-Free Product

RELIABILITY SPECIFICATIONS

No.	Test Item	Test Methods	REF.DOC
1	Drop Test	50 cm height, fall freely onto firm wood for 3 times.	JIS C6701
2	Mechanical Shock	Device are shocked to half sine wave (1000 G) three mutually pendicular axes each 3 times. 0.5m sec. duration time	MIL-STD-202F
3	Vibration	Frequency range 10 ~ 55 Hz Amplitude 1.52 mm Sweep time 1 minute Pendicular axes each test time 2 hours (Total test time 6 hours)	MIL-STD-883E
4	Solderability	Temperature 235 °C +/- 5°C Immersing depth 0.5 mm minimum Immersion time 5 +/- 0.5 seconds Flux Rosin resin methyl alcohol solvent (1 : 4)	MIL-STD-883E
5	Resistance To Soldering Heat	Pre-heat temperature 125 °C Pre-heat time 60 ~ 120 sec. Test temperature 260 +/- 5 °C Test time 10 +/- 1 sec.	MIL-STD-202F
6	High Temp. Storage	+ 125 °C +/- 2 °C for 500 +/- 12 hours	MIL-STD-883E
7	Low Temp. Storage	- 40 °C +/- 2 °C for 500 +/- 12 hours	
8	Thermal Cycles	Total 100 cycles of the following temperature cycle 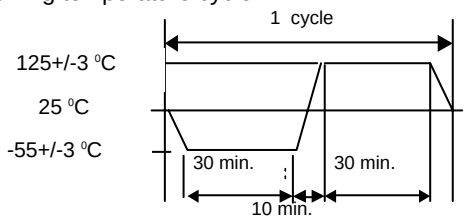	MIL-STD-883E
9	Humidity	Device are left in temperature at +85 °C +/-2 °C with relative humidity of 85% for 500 hours.	JIS-C-5023