# INFORMATION

**PRODUCT No. :** **Q13MC1461000800**

**MODEL :** **MC-146**

**32.768 kHz 6 pF ± 50**

**INFO. No. :** **Q05-335-11B**

**DATE :** **Jan. 12. 2006**

**EPSON TOYOCOM CORPORATION**

**8548 Naka-minowa**
**Minowa-machi Kamiina-gun**
**Nagano-ken**
**399-4696 Japan**

INTRODUCTION

1. The contents is subject to change without notice.
   Please exchange the specification sheets regarding
   the product's warranty.

2. This sheet is not intended to guarantee or provide
   an approval of implementation of industrial patents.

3. We have prepared this sheet as carefully as possible.
   If you find it incomplete or unsatisfactory in any
   respect, We would welcome your comments.

This product is not authorized for use as critical components in life support device or systems.

## Contents


| Item No. | Item | Page |
|---|---|---|
| [ 1 ] | Absolute maximum ratings | 2 |
| [ 2 ] | Operating range | 2 |
| [ 3 ] | Static characteristics | 2 |
| [ 4 ] | Environmental and Mechanical characteristics | 3 to 4 |
| [ 5 ] | Dimensions and Marking layout | 5 to 6 |
| [ 6 ] | Notes | 7 |

## [ 1 ] Absolute maximum ratings

| Item | Symbol | Rating value |
|---|---|---|
| Storage temperature | TSTG | -55°C to +125°C |
| Maximum drive level | DL | 1.0 μW |

## [ 2 ] Operating range

| Item | Symbol | Value | | |
|---|---|---|---|---|
| | | Min. | Typ. | Max. |
| Operating temperature range | TOPR | -40 °C | | +85 °C |
| Drive level | DL | 0.01 μW | 0.1 μW | 0.5μW |
| Vibration mode | | Fundamental | | |

## [ 3 ] Static characteristics

| Item | Symbol | Value | Note |
|---|---|---|---|
| Frequency | fi | 32.768 kHz | |
| Frequency tolerance | Δ f/f | ± 50 × $10^{-6}$ | CL = 6 pF<br>Ta = +25 ± 3 °C, Drive level : 0.1 μW<br>Not include aging |
| Series resistance | R1 | Max. 65 kΩ | CI meter : Sanders 140B<br>Drive level : 0.5 μW |
| Motional capacitance | C1 | Typ. 1.9 fF | |
| Shunt capacitance | C0 | Typ. 0.8 pF | |
| Turnover temperature | 0T | +25 ± 5°C | Values are calculated by the frequencies at +10, +25, +40°C with C-MOS circuit. |
| Temperature coefficient | a | Max. -4.0 × $10^{-8}$/°$C^2$ | |
| Isolation resistance | IR | Min. 500 MΩ | DC 100V, 60 seconds<br>Between terminal #1 and terminal #4 |
| Aging | fa | ± 3 × $10^{-6}$ ／year | Ta = +25°C ± 3°C<br>Drive level : 0.1 μW |

## [ 4 ] Environmental and Mechanical characteristics

| No. | Items | Value *1*2<br>$\Delta f/f$ [$1 \times 10^{-6}$] | Conditions |
|---|---|---|---|
| 1 | Shock | *3 ± 5 | 100g dummy (SEIKO EPSON Standard)<br>drop from 1500 mm height on to the<br>concrete 3 directions 10 times |
| 2 | Vibration | *3 ± 3 | 10 Hz to 55 Hz amplitude 0.75 mm<br>55 Hz to 500 Hz acceleration 98 $m/s^2$<br>10 Hz → 500 Hz → 10 Hz 15 min./cycle<br>6 h (2 hours , 3 directions) |
| 3 | Resistance to<br>soldering heat<br>(Reflow characteristics) | *3 ± 5 | Treat the Reflow 2 times by the following profile in the next page |
| 4 | High temperature storage | *3 a ) ± 20<br>b ) ± 10 | a ) +125 °C × 1 000 h<br>b ) +85 °C × 1 000 h |
| 5 | Low temperature storage | *3 ± 10 | -55°C × 1 000 h |
| 6 | Temperature humidity storage | *3 ± 10 | +85°C × 85%RH × 1000 h |
| 7 | Temperature cycle | *3 ± 10 | -55°C ↔ +125°C<br>30 minutes at each temperature 100 cycles |
| 8 | Shear | No peeling-off at a soldered part | 10 N press the side for 10 s ±1 s.<br>Ref. IEC 60068-2-21 |
| 10 | Pull-off | No peeling-off at a soldered part | 10 N press the side for 10 s ±1 s.<br>Ref. IEC 60068-2-21 |
| 11 | Substrate bending | No peeling-off at a soldered part | Bending width reaches 3mm and hold for 5 s ± 1 s × 1 time Ref. IEC 60068-2-21 |
| 12 | Solderability | Termination must be 95% covered with fresh solder | Dip termination into solder bath at<br>235 ± 5°C for 3 s (Using rosin flux) |
| 13 | Solvent resistance | The marking shall be legible | Ref. JIS C 0052 or IEC 60068-2-45 |

Note
1. *1 Each test done independently.
2. *2 Measuring 1 h to 24 h later leaving in room temperature after each test.
3. *3 Pre conditionings
    1. +125 °C × 24 h to +85 °C × 85 % × 48 h → reflow 2 times
    2. Initial value shall be after 24 h at room temperature.
4. Shift series resistance at after above tests should be less than ± 15 % or less than ± 5 kΩ
   In case Resistance to soldering heat, high temperature storage (± 125 °C ×1 000 h ) shift series resistance at after above tests should be less than ± 20 % or ± 10 kΩ

♦Air- reflow

Pre heating temperature : Tp1～Tp2 = +170 ℃
Peak temperature must not exceed +260 ℃ and the duration of over +220 ℃ should be 35 s

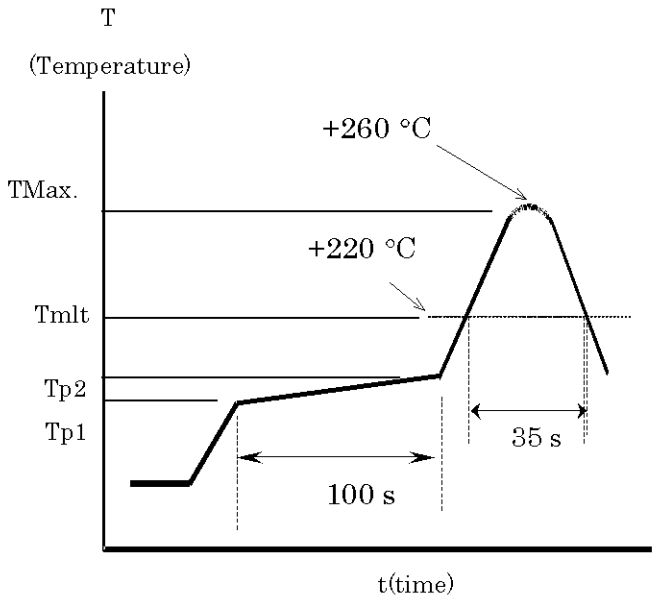

## [ 5 ] Dimensions and Marking layout

1. Dimensions

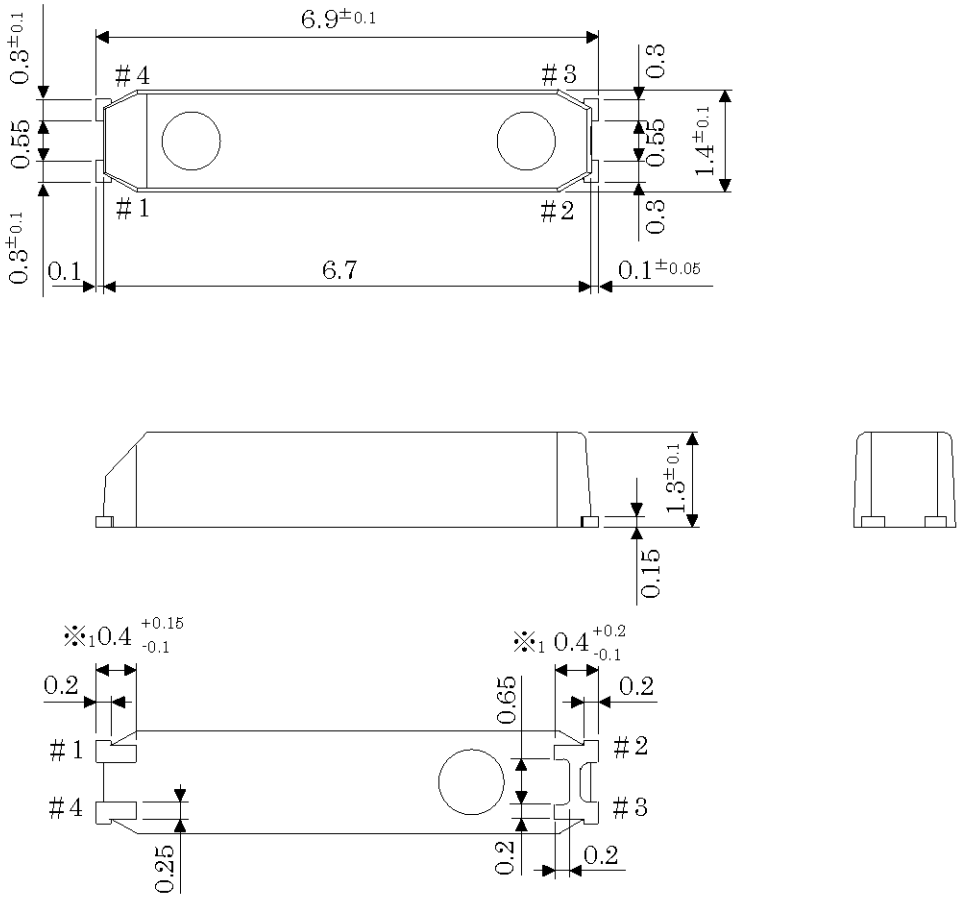


♣1 : Available area for soldering

There are some cases that a part of the case of quartz resonator expose on the surface of the molding material

| | |
|---|---|
| Terminal thickness | 0.15mm |
| Lead Frame | 42Alloy |
| Terminal treatment | Pb Free Solder plate 15 ± 10 μm |
| Molding | Epoxy Compound |
| Compound color | Black |

2. Internal Connection

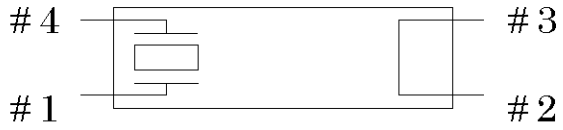


Do not connect 2# and 3# terminals to any external circuits (including GND).

| | | | |
|---|---|---|---|
| Type | MC-146 | Unit | 1 = 1 mm |

3. Recommended soldering pattern

Unit : 1 = 1 mm

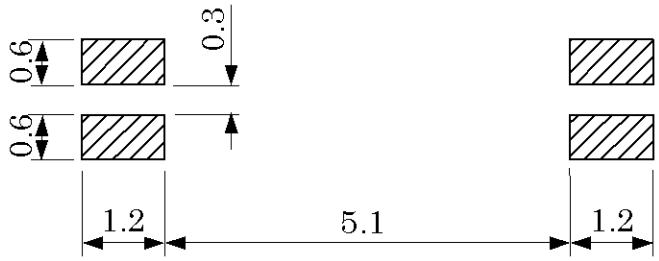


4. Marking layout

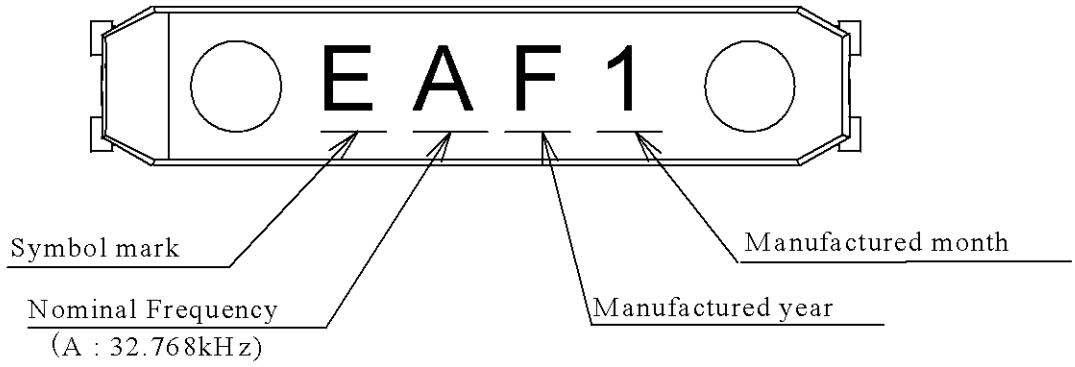


Symbol of Manufacturing year

| Year digit | 1 | 2 | 3 | 4 | 5 | 6 | 7 | 8 | 9 | 0 |
|---|---|---|---|---|---|---|---|---|---|---|
| Marking | A | B | C | D | E | F | G | H | J | K |

Year digit(1st) of the Production

Symbol of Manufacturing month

| Jan. | Feb. | …… | Oct. | Nov. | Dec. |
|---|---|---|---|---|---|
| 1 | 2 | …… | X | Y | Z |

♦ The above marking layout shows only marking contents and their approximate position and it is not for font, size and exact position.

| Type | MC-146 | Unit | 1=1 mm |
|---|---|---|---|

## [ 6 ] Notes

1. Max two (2) times reflow is allowed. Once miss soldering is happened, hand work soldering by soldering iron is recommended. (+350°C × within 5 sec.)

2. Patterning should be followed by our recommended one.

3. Applying excessive excitation force to the crystal resonator may cause deterioration damage.

4. Unless adequate negative resistance is allocated in the oscillation circuit, start up time of oscillation may be increased, or no oscillation may occur.

   How to check the negative resistance.

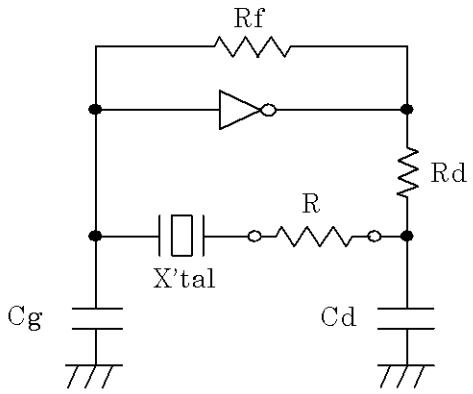


(1) Connect the resistance (R) to the circuit in series with the crystal resonator.
(2) Adjust R so that oscillation can start (or stop).
(3) Measure R when oscillation just start (or stop) in above (2).
(4) Get the negative resistance
$-R = R + CI$ value.
(5) Recommended -R
$|-R| > CI \times (5 \sim 10)$

5. The shortest patterning line on board is recommendable.
   Too long line on board may cause of abnormal oscillation.

6. To avoid mull function, no pattern under or near the crystal is allowed.
   Solder paste should be more than 150 μm thickness.

7. This device must be stored at the normal temperature and humidity conditions before mounting on a board.

8. Too much exciting shock or vibration may cause deterioration on damage.
   Depending on the condition such as a shock in assembly machinery, the products may be damaged.
   Please check your condition in advance to maintain shock level to be smallest.

9. Depending on the conditions, ultrasonic cleaning may cause resonant damage of the internal crystal resonator. Since we are unable to determine the conditions (type of cleaning unit, power, time, conditions inside the bath, etc.) to be used in your company, we cannot guarantee the safety of this unit when it is cleaned in an ultrasonic cleaner.

10. Ink marking may be damaged by some kind of solvent, please take precautions when choosing solvent by your selves.

11. Please refer to packing specification regarding how to storage the products in the pack.

# TAPING SPECIFICATION

## 1. APPLICATION

This document is applicable to MC-146.

## 2. CONTENTS


| Item No. | Item | Page |
|---|---|---|
| [ 1 ] | Taping specification | 1 to 2 |
| [ 2 ] | Inner carton | 3 |
| [ 3 ] | Shipping carton | |
| [ 4 ] | Marking | 4 |
| [ 5 ] | Quantity | |
| [ 6 ] | Storage environment | |
| [ 7 ] | Handling | |

## [ 1 ] Taping specification

Subject to EIA-481 , EIAJ EDX7602 , IEC 60286 , and JIS C0806.

(1) Tape dimensions TE1604L

Material of the Carrier Tape : PS

Material of the Top Tape : PET+PE

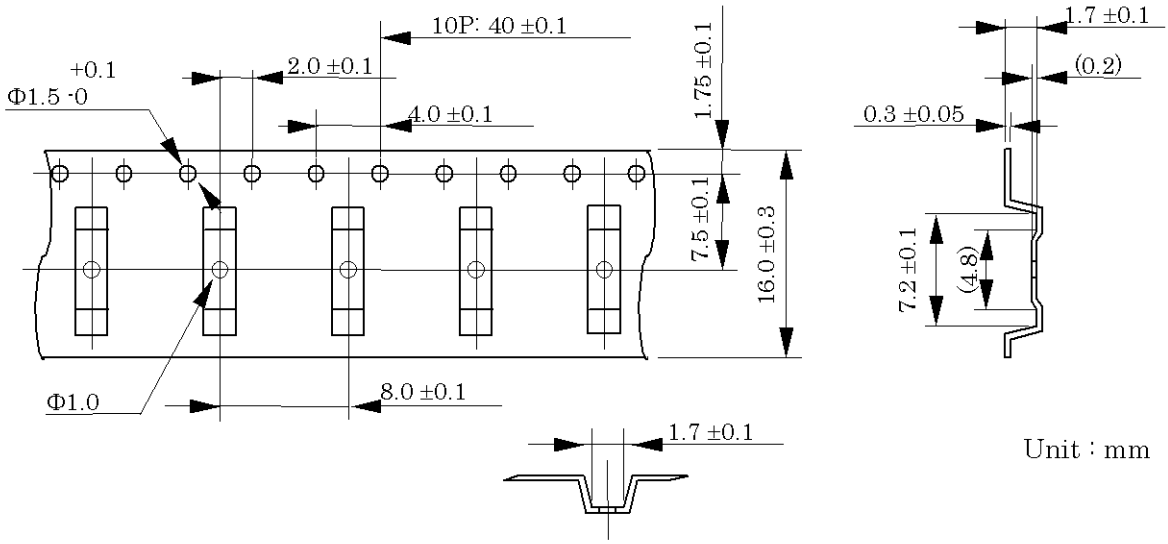


Unit : mm

(2) Reel dimensions

Material of the Reel : PS

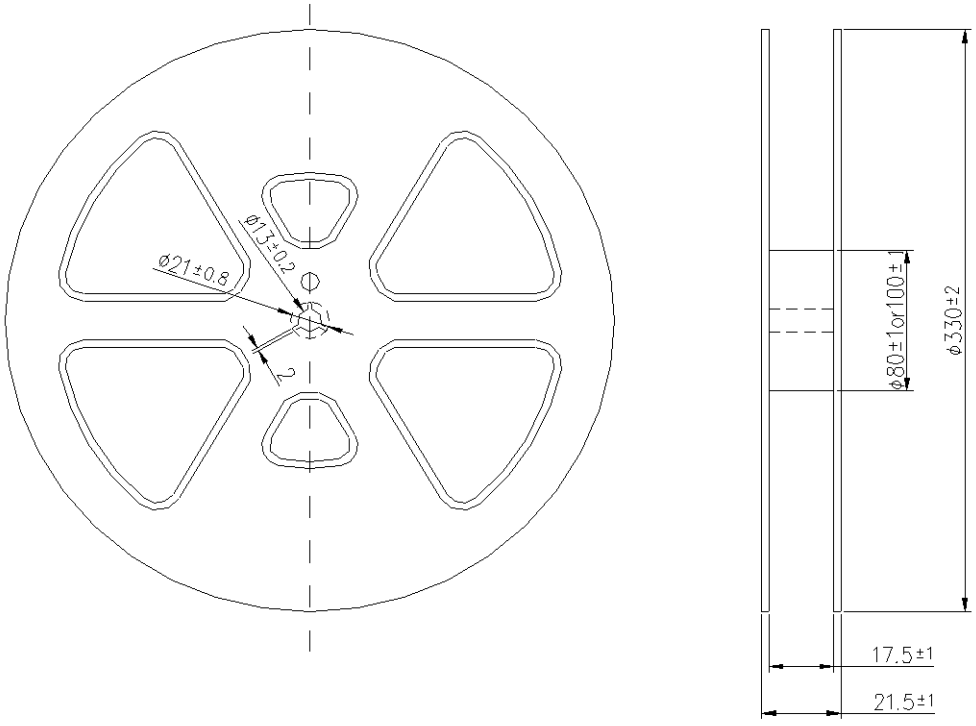


Form and Size of reel window shows are one of the example

(3) Packing

(a) Tape & Reel

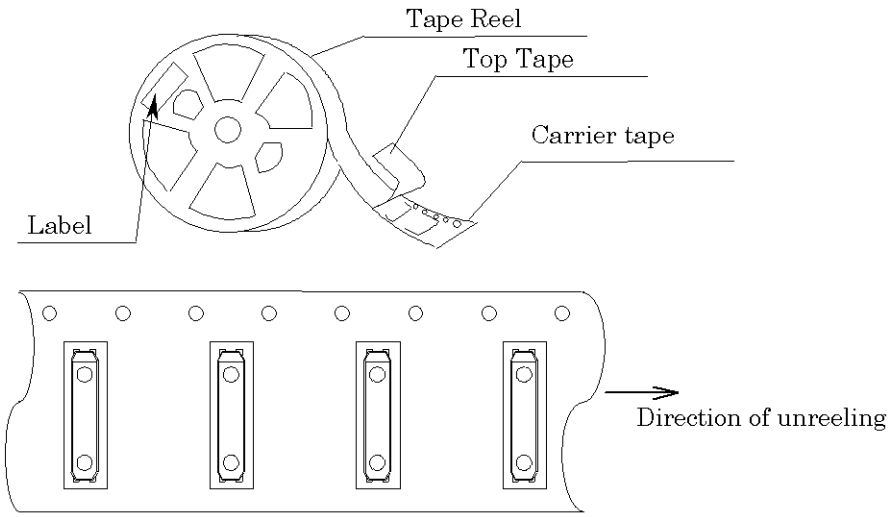


(b) Start & End Point

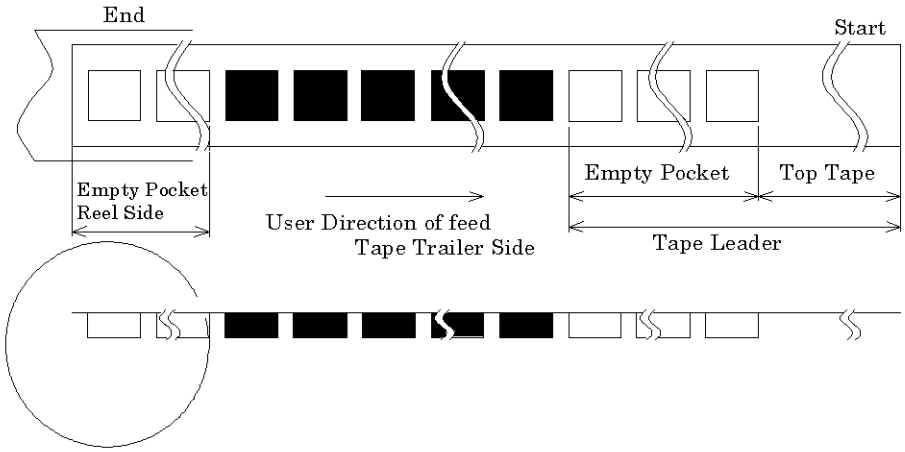


(c) Peel force of the cover tape

(1) angle : cover tape during peel off and the direction of unreeling shall be 165° to 180°.

(2) peel speed : 5 mm/s.

| Item | | Empty Space |
|---|---|---|
| Tape Leader | Top Tape | Min. 1 000 mm |
| | Carrier Tape | Min. 40 pockets |
| Tape Trailer | Top Tape | Min. 0 mm |
| | Carrier Tape | Min. 40 pockets |

## [ 2 ] Inner Carton

a) Packing to antistatic bag

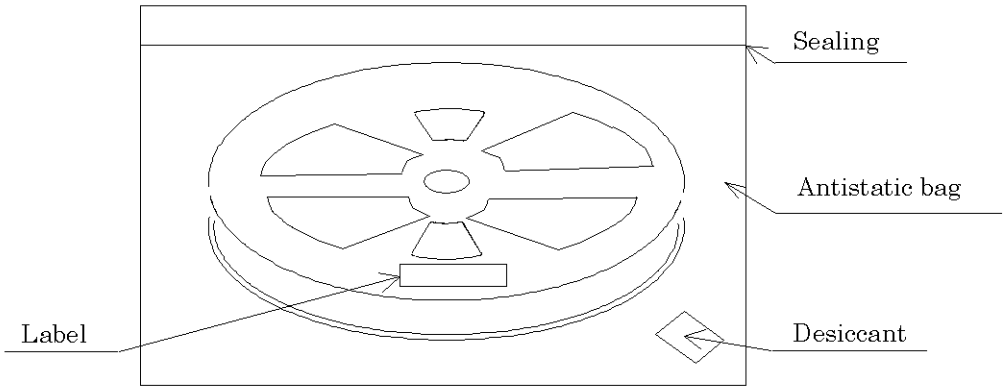


b) Packing to innercarton

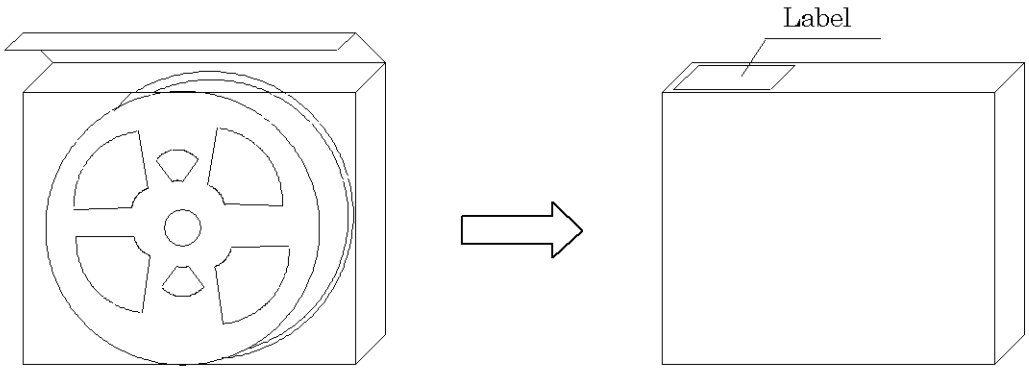


## [ 3 ] Shipping Carton

- Put inner boxes into an outer box.
- If there are room in the outer box,material is put in a shock absorbing together.

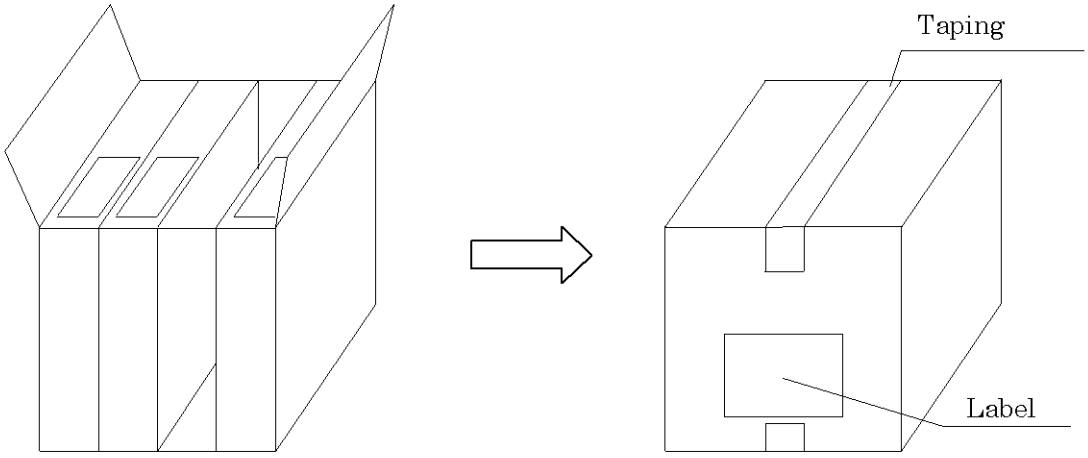

## [ 4 ] Marking

(1) Reel marking

- Reel marking shall consist of :
  1) Parts name
  2) Quantity
  3) Manufacturing Date or symbol
  4) Manufacturer's Date or symbol
  5) Others (if necessary)

(2) Inner carton marking

- Same as Reel marking.

(3) Shipping carton marking

- Shipping carton marking shall consist of :
  1) Parts name
  2) Quantity

## [ 5 ] Quantity

- 3 000 pcs./reel

## [ 6 ] Storage environment

(1) To storage the reel at +15 °C to +35 °C, 25 %RH to 85 %RH of Humidity.
(2) To open the packing just before using.
(3) Not to expose the sun.
(4) Not to storage with some erosive chemicals.
(5) Nothing is allowed to put on the reel or carton to prevent mechanical damage.

## [ 7 ] Handling

To handle with care to prevent the damage of tape, reel and products.

# — PROCESS QUALITY CONTROL —

CODE : MC-146

Control No : M-9803-AEE-1

SURFACE MOUNTING TYPE CRYSTAL MC-146

1999.09.14

EPSON TOYOCOM CORP.
INA PLANT QZ BU

| PREPARED | CHECKED | APPROVED |
|---|---|---|
| | T.Ozawa | M.Taniguchi |

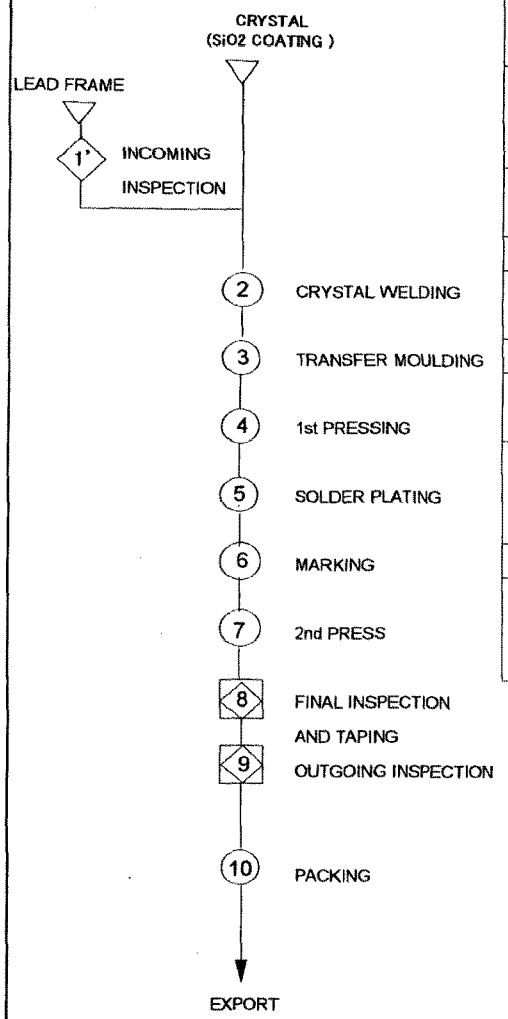


| No | RESPONSIBLE SECTION | STANDARD AND SPECIFICATIONS | INSPECTION AND CONTROL ITEMS | INSPECTION METHORD | MEASURING INSTRUMENTS | DATA COLLECTION |
|---|---|---|---|---|---|---|
| 1' | MALAYSIA PIANT | PURCHASING SPECIFICATION | APPEARANCE | SAMPLING | PIUG GAUGES | IN-COMMING INSPECTION |
| | | INCOMING INSPECTION STD. | DIMENSION | | MICROSCOPE | DATA SHEET |
| 2 | MALAYSIA PIANT | MANUFACTURING INSTRUCTION SHEET | APPEARANCE | 100% INSPECTION | MICROSCOPE | PROCESS DATA SHEET |
| | | MANUFACTURING INSTRUCTION SHEET | DIMENSION | SAMPLING | T.M.S | PROCESS DATA SHEET |
| | | MANUFACTURING INSTRUCTION SHEET | STRENGTH | SAMPLING | PUSH&PULL GAUGE | PROCESS DATA SHEET |
| 3 | MALAYSIA PIANT | MANUFACTURING INSTRUCTION SHEET | APPEARANCE | 100% INSPECTION | MICROSCOPE | PROCESS DATA SHEET |
| | | | | SAMPLING | X-RAY | PROCESS DATA SHEET |
| 4 | MALAYSIA PIANT | MANUFACTURING INSTRUCTION SHEET | APPEARANCE | SAMPLING | MICROSCOPE | PROCESS DATA SHEET |
| 5 | MALAYSIA PIANT | SOLDER PLATING | S.P THICKNESS | SAMPLING | FLUOROSCOPY | PROCESS DATA SHEET |
| | SUB-CONTRACTOR | SPECIFICATION SHEET | APPEARANCE | SAMPLING | VISUAL INSPECTION | PROCESS DATA SHEET |
| 6 | MALAYSIA PIANT | MANUFACTURING INSTRUCTION SHEET | APPEARANCE | SAMPLING | VISUAL INSPECTION | PROCESS DATA SHEET |
| 7 | MALAYSIA PIANT | MANUFACTURING INSTRUCTION | APPEARANCE | SAMPLING | MICROSCOPE | PROCESS DATA SHEET |
| | | | DIMENSION | SAMPLING | INSPECTION JIG | PROCESS DATA SHEET |
| 8 | MALAYSIA PIANT | MANUFACTURING INSTRUCTION SHEET | ELECTRICAL CHARACTERISTIC | 100% INSPECTION | FO CHECKING By m/c | PROCESS DATA SHEET |
| | | MANUFACTURING INSTRUCTION SHEET | TAPING STRENGTH | SAMPLING | STRENGTH TESTER | PROCESS DATA SHEET |
| | | QUALITY STD. | ELECTRICAL CHARACTERISTIC | SAMPLING | TO&CI CHECKER | OGI INSP.SHEET |
| 9 | MALAYSIA PIANT | QUALITY STD. | APPEARANCE | SAMPLING | MICROSCOPE | OGI INSP.SHEET |
| 10 | MALAYSIA PIANT | MANUFACTURING INSTRUCTION SHEET | EXPORT CUSTOMER LIST | | | EXPORT DOCUMENTS |
| | | DAILY SHIPPING LIST | FREQUENCY | | | |
| | | | QUANTITY | | | |

# — PROCESS QUALITY CONTROL —

2000.04.26

| PREPARED | CHECKED | APPROVED |
|---|---|---|
| | | |

CODE : MC-146

Control No : M-9803-ASE-1

**EPSON TOYOCOM CORP.**
**INA PLANT QZ BU**

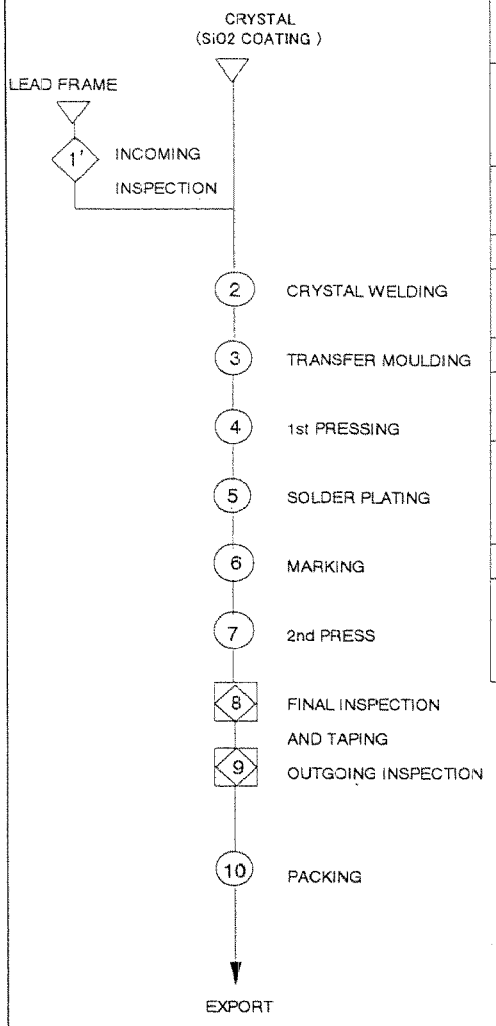


| No | RESPONSIBLE SECTION | STANDARD AND SPECIFICATIONS | INSPECTION AND CONTROL ITEMS | INSPECTION METHORD | MEASURING INSTRUMENTS | DATA COLLECTION |
|---|---|---|---|---|---|---|
| 1' | CHINA PIANT | PURCHASING SPECIFICATION | APPEARANCE | SAMPLING | PIUG GAUGES | IN-COMMING INSPECTION |
| | | INCOMING INSPECTION STD. | DIMENSION | | MICROSCOPE | DATA SHEET |
| 2 | CHINA PIANT | MANUFACTURING INSTRUCTION SHEET | APPEARANCE | 100% INSPECTION | MICROSCOPE | PROCESS DATA SHEET |
| | | MANUFACTURING INSTRUCTION SHEET | DIMENSION | SAMPLING | T.M.S | PROCESS DATA SHEET |
| | | MANUFACTURING INSTRUCTION SHEET | STRENGTH | SAMPLING | PUSH&PULL GAUGE | PROCESS DATA SHEET |
| 3 | CHINA PIANT | MANUFACTURING INSTRUCTION SHEET | APPEARANCE | 100% INSPECTION | MICROSCOPE | PROCESS DATA SHEET |
| | | | | SAMPLING | | PROCESS DATA SHEET |
| 4 | CHINA PIANT | MANUFACTURING INSTRUCTION SHEET | APPEARANCE | SAMPLING | MICROSCOPE | PROCESS DATA SHEET |
| 5 | CHINA PIANT | SOLDER PLATING | S.P THICKNESS | SAMPLING | FLUOROSCOPY | PROCESS DATA SHEET |
| | SUB-CONTRACTOR | SPECIFICATION SHEET | APPEARANCE | SAMPLING | VISUAL INSPECTION | PROCESS DATA SHEET |
| 6 | CHINA PIANT | MANUFACTURING INSTRUCTION SHEET | APPEARANCE | SAMPLING | VISUAL INSPECTION | PROCESS DATA SHEET |
| 7 | CHINA PIANT | MANUFACTURING INSTRUCTION | APPEARANCE | SAMPLING | MICROSCOPE | PROCESS DATA SHEET |
| | | | DIMENSION | SAMPLING | INSPECTION JIG | PROCESS DATA SHEET |
| 8 | CHINA PIANT | MANUFACTURING INSTRUCTION SHEET | ELECTRICAL CHARACTERISTIC | 100% INSPECTION | F0 CHECKING By m/c | PROCESS DATA SHEET |
| | | MANUFACTURING INSTRUCTION SHEET | TAPING STRENGTH | SAMPLING | STRENGTH TESTER | PROCESS DATA SHEET |
| | | QUALITY STD. | ELECTRICAL CHARACTERISTIC | SAMPLING | T0&CI CHECKER | OGI INSP.SHEET |
| 9 | CHINA PIANT | QUALITY STD. | APPEARANCE | SAMPLING | MICROSCOPE | OGI INSP.SHEET |
| 10 | CHINA PIANT | MANUFACTURING INSTRUCTION SHEET | EXPORT CUSTOMER LIST | | | EXPORT DOCUMENTS |
| | | DAILY SHIPPING LIST | FREQUENCY | | | |
| | | | QUANTITY | | | |

# — PROCESS QUALITY CONTROL —

2000.04.26

| PREPARED | CHECKED | APPROVED |
|---|---|---|
| M.Nagai | M.Nagai | |

CODE : MC-146

Control No : M-9803-ANE-1

EPSON TOYOCOM CORP.
INA PLANT QZ BU

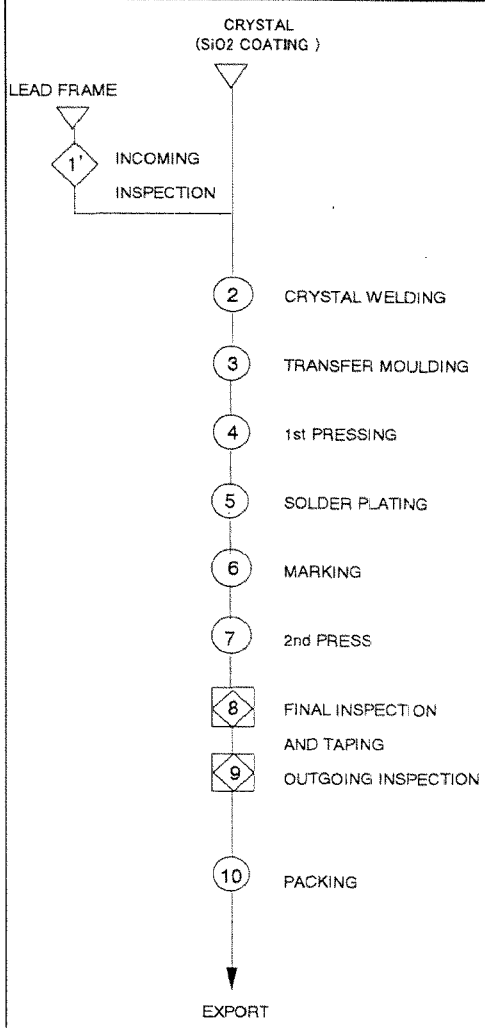


| No | RESPONSIBLE SECTION | STANDARD AND SPECIFICATIONS | INSPECTION AND CONTROL ITEMS | INSPECTION METHORD | MEASURING INSTRUMENTS | DATA COLLECTION |
|---|---|---|---|---|---|---|
| 1' | SUB-CONTRACTOR | PURCHASING SPECIFICATION | APPEARANCE | SAMPLING | PIUG GAUGES | IN-COMMING INSPECTION |
| | | INCOMING INSPECTION STD. | DIMENSION | | MICROSCOPE | DATA SHEET |
| 2 | SUB-CONTRACTOR | MANUFACTURING INSTRUCTION SHEET | APPEARANCE | 100% INSPECTION | MICROSCOPE | PROCESS DATA SHEET |
| | | MANUFACTURING INSTRUCTION SHEET | DIMENSION | SAMPLING | T.M.S | PROCESS DATA SHEET |
| | | MANUFACTURING INSTRUCTION SHEET | STRENGTH | SAMPLING | PUSH&PULL GAUGE | PROCESS DATA SHEET |
| 3 | SUB-CONTRACTOR | MANUFACTURING INSTRUCTION SHEET | APPEARANCE | 100% INSPECTION | MICROSCOPE | PROCESS DATA SHEET |
| | | | | SAMPLING | X-RAY | PROCESS DATA SHEET |
| 4 | SUB-CONTRACTOR | MANUFACTURING INSTRUCTION SHEET | APPEARANCE | SAMPLING | MICROSCOPE | PROCESS DATA SHEET |
| 5 | SUB-CONTRACTOR | SOLDER PLATING | S.P THICKNESS | SAMPLING | FLUOROSCOPY | PROCESS DATA SHEET |
| | SUB-CONTRACTOR | SPECIFICATION SHEET | APPEARANCE | SAMPLING | VISUAL INSPECTION | PROCESS DATA SHEET |
| 6 | SUB-CONTRACTOR | MANUFACTURING INSTRUCTION SHEET | APPEARANCE | SAMPLING | VISUAL INSPECTION | PROCESS DATA SHEET |
| 7 | SUB-CONTRACTOR | MANUFACTURING INSTRUCTION | APPEARANCE | SAMPLING | MICROSCOPE | PROCESS DATA SHEET |
| | | | DIMENSION | SAMPLING | INSPECTION JIG | PROCESS DATA SHEET |
| 8 | SUB-CONTRACTOR | MANUFACTURING INSTRUCTION SHEET | ELECTRICAL CHARACTERISTIC | 100% INSPECTION | F0 CHECKING By m/c | PROCESS DATA SHEET |
| | | MANUFACTURING INSTRUCTION SHEET | TAPING STRENGTH | SAMPLING | STRENGTH TESTER | PROCESS DATA SHEET |
| | | QUALITY STD. | ELECTRICAL CHARACTERISTIC | SAMPLING | T0&CI CHECKER | OGI INSP.SHEET |
| 9 | SUB-CONTRACTOR | QUALITY STD. | APPEARANCE | SAMPLING | MICROSCOPE | OGI INSP.SHEET |
| 10 | SUB-CONTRACTOR | MANUFACTURING INSTRUCTION SHEET | EXPORT CUSTOMER LIST | | | EXPORT DOCUMENTS |
| | | DAILY SHIPPING LIST | FREQUENCY | | | |
| | | | QUANTITY | | | |

# — PROCESS QUALITY CONTROL —

2000.04.26

| PREPARED | CHECKED | APPROVED |
|---|---|---|
| | | |

CODE : MC-146

Control No : M-9803-AKE-1

EPSON TOYOCOM CORP.
INA PLANT QZ BU

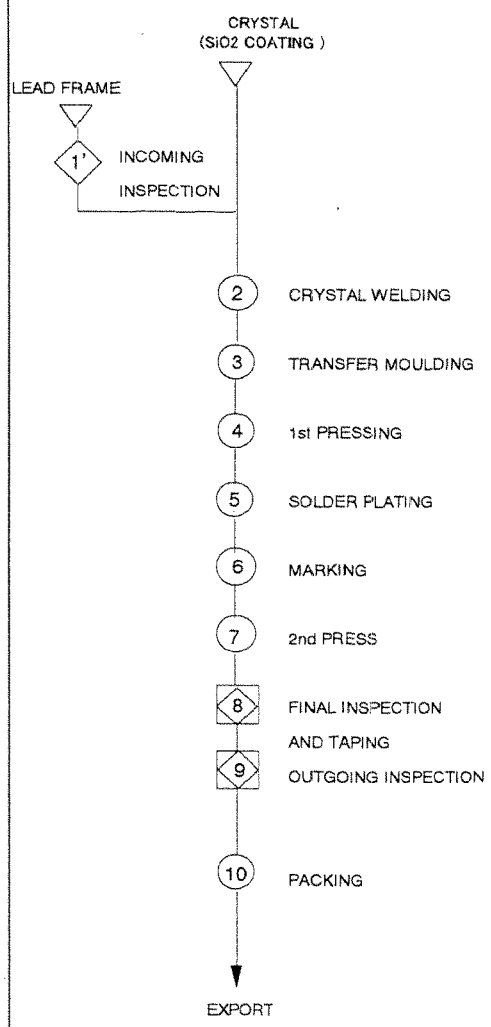


| No | RESPONSIBLE SECTION | STANDARD AND SPECIFICATIONS | INSPECTION AND CONTROL ITEMS | INSPECTION METHORD | MEASURING INSTRUMENTS | DATA COLLECTION |
|---|---|---|---|---|---|---|
| 1' | SUB-CONTRACTOR | PURCHASING SPECIFICATION | APPEARANCE | SAMPLING | PIUG GAUGES | IN-COMMING INSPECTION |
| | | INCOMING INSPECTION STD. | DIMENSION | | MICROSCOPE | DATA SHEET |
| 2 | SUB-CONTRACTOR | MANUFACTURING INSTRUCTION SHEET | APPEARANCE | 100% INSPECTION | MICROSCOPE | PROCESS DATA SHEET |
| | | MANUFACTURING INSTRUCTION SHEET | DIMENSION | SAMPLING | T.M.S | PROCESS DATA SHEET |
| | | MANUFACTURING INSTRUCTION SHEET | STRENGTH | SAMPLING | PUSH&PULL GAUGE | PROCESS DATA SHEET |
| 3 | SUB-CONTRACTOR | MANUFACTURING INSTRUCTION SHEET | APPEARANCE | 100% INSPECTION | MICROSCOPE | PROCESS DATA SHEET |
| | | | | SAMPLING | | PROCESS DATA SHEET |
| 4 | SUB-CONTRACTOR | MANUFACTURING INSTRUCTION SHEET | APPEARANCE | SAMPLING | MICROSCOPE | PROCESS DATA SHEET |
| 5 | SUB-CONTRACTOR | SOLDER PLATING | S.P THICKNESS | SAMPLING | FLUOROSCOPY | PROCESS DATA SHEET |
| | SUB-CONTRACTOR | SPECIFICATION SHEET | APPEARANCE | SAMPLING | VISUAL INSPECTION | PROCESS DATA SHEET |
| 6 | SUB-CONTRACTOR | MANUFACTURING INSTRUCTION SHEET | APPEARANCE | SAMPLING | VISUAL INSPECTION | PROCESS DATA SHEET |
| 7 | SUB-CONTRACTOR | MANUFACTURING INSTRUCTION | APPEARANCE | SAMPLING | MICROSCOPE | PROCESS DATA SHEET |
| | | | DIMENSION | SAMPLING | INSPECTION JIG | PROCESS DATA SHEET |
| 8 | SUB-CONTRACTOR | MANUFACTURING INSTRUCTION SHEET | ELECTRICAL CHARACTERISTIC | 100% INSPECTION | F0 CHECKING By m/c | PROCESS DATA SHEET |
| | | MANUFACTURING INSTRUCTION SHEET | TAPING STRENGTH | SAMPLING | STRENGTH TESTER | PROCESS DATA SHEET |
| | | QUALITY STD. | ELECTRICAL CHARACTERISTIC | SAMPLING | T0&CI CHECKER | OGI INSP.SHEET |
| 9 | SUB-CONTRACTOR | QUALITY STD. | APPEARANCE | SAMPLING | MICROSCOPE | OGI INSP.SHEET |
| 10 | SUB-CONTRACTOR | MANUFACTURING INSTRUCTION SHEET | EXPORT CUSTOMER LIST | | | EXPORT DOCUMENTS |
| | | DAILY SHIPPING LIST | FREQUENCY | | | |
| | | | QUANTITY | | | |

MC－146 Structure diagram

Unit：mm

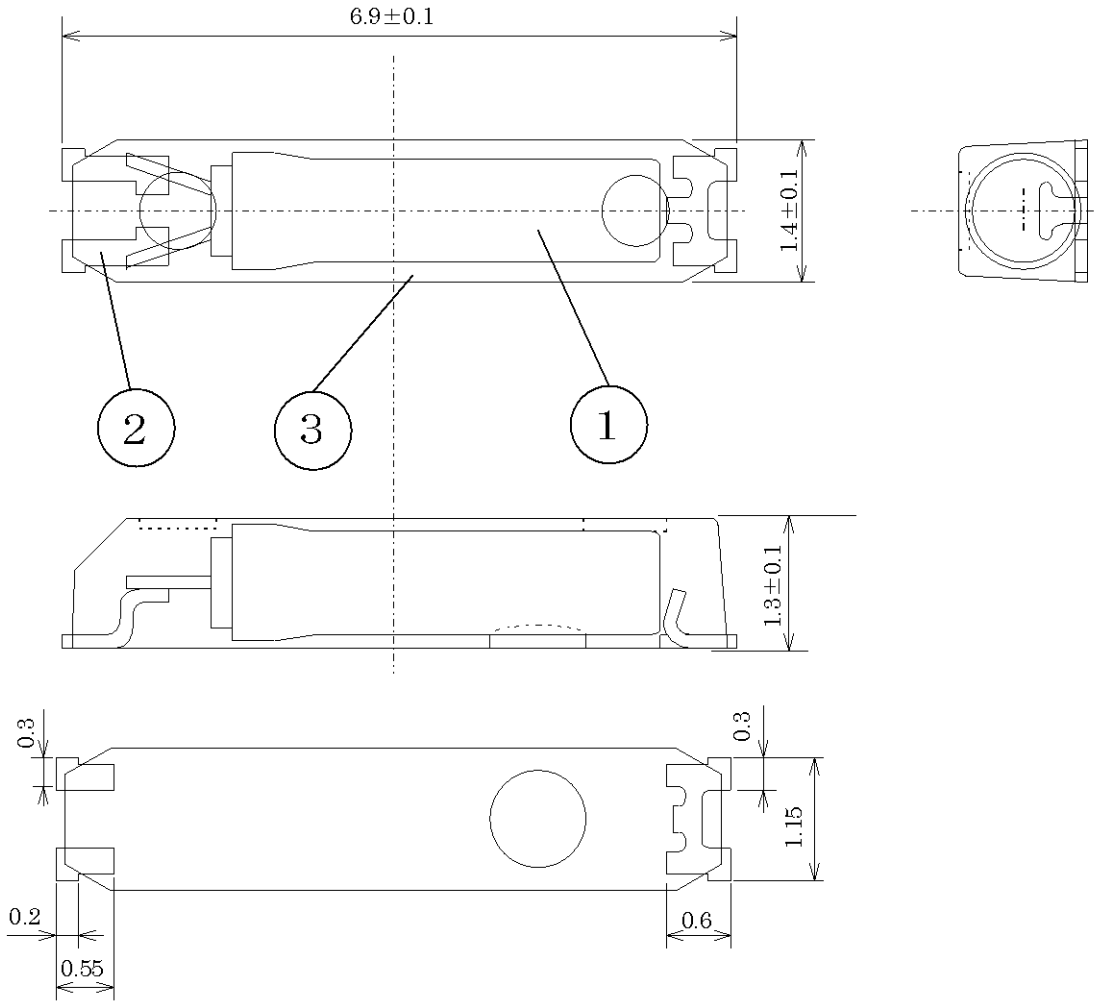


| No. | Name of Part | Material | Remarks |
|---|---|---|---|
| ① | Crystal　C-5SH | ―――― | ―――― |
| ② | Lead | 4 2 Alloy | Solder Plating (Pb free) |
| ③ | Molding | Epoxy Compound | ―――― |