INFORMATION

PRODUCT No. : **Q24FA20H0039000**

MODEL : **FA-20H**

INFO. No. : **A14-620-4A**

DATE : **Aug. 21. 2014**

SEIKO EPSON CORPORATION

8548 Naka-minowa
Minowa-machi Kamiina-gun
Nagano-ken
399-4696 Japan

INTRODUCTION

1. The contents is subject to change without notice.
   Please exchange the specification sheets regarding
   the product's warranty.

2. This sheet is not intended to guarantee or provide
   an approval of implementation of industrial patents.

3. We have prepared this sheet as carefully as possible.
   If you find it incomplete or unsatisfactory in any
   respect, We would welcome your comments.

This product complies with RoHS Directive.

This Product supplied (and any technical information furnished, if any) by Seiko Epson Corporation shall not be used for the development and manufacture of weapon of mass destruction or for other military purposes. Making available such products and technology to any third party who may use such products or technologies for the said purposes are also prohibited.

This product listed here is designed as components or parts for electronics equipment in general consumer use. We do not expect that any of these products would be incorporated or otherwise used as a component or part for the equipment, which requires an extra high reliability, such as satellite, rocket and other space systems, and medical equipment, the functional purpose of which is to keep life.

Product No. / Model

The product No. of this crystal unit is Q24FA20H0039000.
The model is FA-20H.

Contents

Item No.	Item	Page
[1]	Absolute maximum ratings	2
[2]	Operating range	2
[3]	Electrical characteristics	2
[4]	Environmental and mechanical characteristics	3
[5]	Dimensions and circuit	4
[6]	Recommended soldering pattern and marking layout	5
[7]	Notes	6

[1] Absolute maximum ratings

No.	Parameter	Rating value	Note
1	Storage temperature	-40 °C to +125 °C	Suppose to be within CI std. at +25 °C ± 3 °C

[2] Operating range

No.	Parameter	Symbol	Value		
			Min.	Typ.	Max.
1	Operating temperature	T_use	-40 °C	—	+85 °C
2	Level of drive	DL	10 μW	—	100 μW

[3] Electrical characteristics

No.	Parameter	Symbol	Standard	Conditions
1	Nominal frequency	f	25 MHz	Fundamental
2	Frequency tolerance	f_tol	$\pm 20 \times 10^{-6}$	CL = 18 pF Ta = +25 °C±3 °C Drive level : 100 μW Not include aging
3	Motional resistance	R1	60 ΩMax.	π circuit JIS C6701 Drive level : 100 μW Ta=-40 °C to +85 °C
4	Shunt capacitance	C_0	2 pF Max	
5	Frequency versus temperature characteristics	f_tem	$\pm 18 \times 10^{-6}$	Ta = -40 °C to +85 °C (1×10^{-6} at +25 °C±3 °C) Drive level : 100 μW
6	Isolation resistance	IR	500 MΩ Min.	DC 100V × 60 sec. between each terminals
7	Frequency aging	f_age	$\pm 1 \times 10^{-6}$ / year	Ta = +25 °C±3 °C Drive level : 100 μW

[4] Environmental and mechanical characteristics

Item No.3 to No.6 shall be tested after following pre conditioning.

Pre conditioning : Test crystal must be leaving in room temperature for 2h to 24h after reflow × 3 .

(The company evaluation condition : We evaluate it by the following examination item and examination condition.)

No.	Item	Value *1 *2	Test Conditions
		$\Delta f / f\ [1 \times 10^{-6}]$	
1	Drop	(2) ± 2	150g dummy Jig (EPSON TOYOCOM Standard) drop from 1500 mm height on the Concrete 3 directions 10 times
2	Vibration	(2) ± 2	10Hz to 55 Hz amplitude 0.75 mm 55Hz to 500Hz acceleration 98 m/s^2 10Hz → 500Hz → 10Hz 15min./cycle 6 h (2 hours , 3 directions)
3	High temperature storage	(1) ± 2	+85°C × 1 000 h
4	Low temperature storage	(1) ± 2	-40°C × 1 000 h
5	Temperature cycle	(1) ± 2	-40°C ↔ +85°C 30 minutes at each temp. 100 cycle
6	Temperature humidity storage	(1) ± 2	+85°C × 85%RH × 1 000 h
7	Resistance to soldering heat	± 2	For convention reflow soldering furnace (3 times)
8	Substrate bending	No peeling-off at a soldered part	Bend width reaches 3 mm and hold for 5 s ± 1 s × 1 time Ref. IEC 60068-2-21
9	Shear	No peeling-off at a soldered part	10 N press for 10 s ± 1 s Ref. IEC 60068-2-21
10	Pull – off	No peeling-off at a soldered part	10 N press for 10 s ± 1 s Ref. IEC 60068-2-21
11	Solder ability	Terminals must be 95% covered With fresh solder.	Dip termination into solder bath at +230 °C ± 10 °C for 5 s (Using Rosin Flux)

< Notes >

1. Item No.1 to No.11 resistance at before above tests should be less than ±20 % or less than ±10Ω.
2. *1 each test done independently.
3. *2 measuring 24 h later leaving in room temperature after each test.

Reflow condition (follow to IPC / JEDEC J-STD-020C)

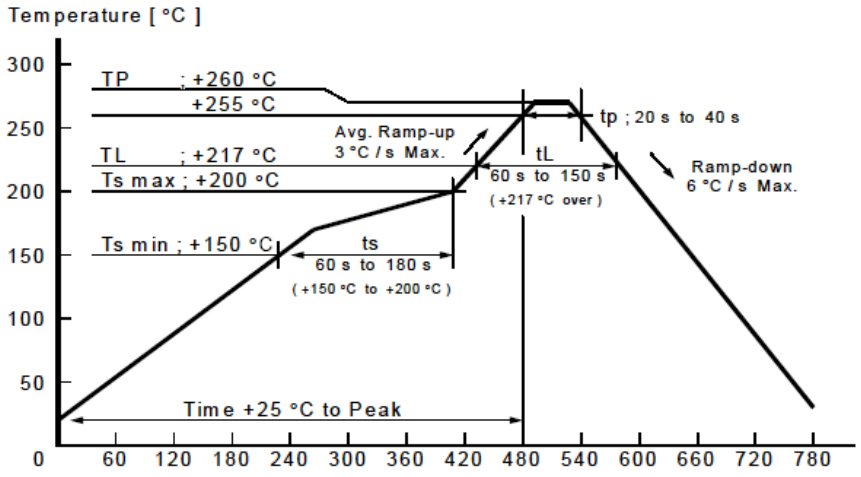

[5] Dimensions and Circuit

1) Dimension

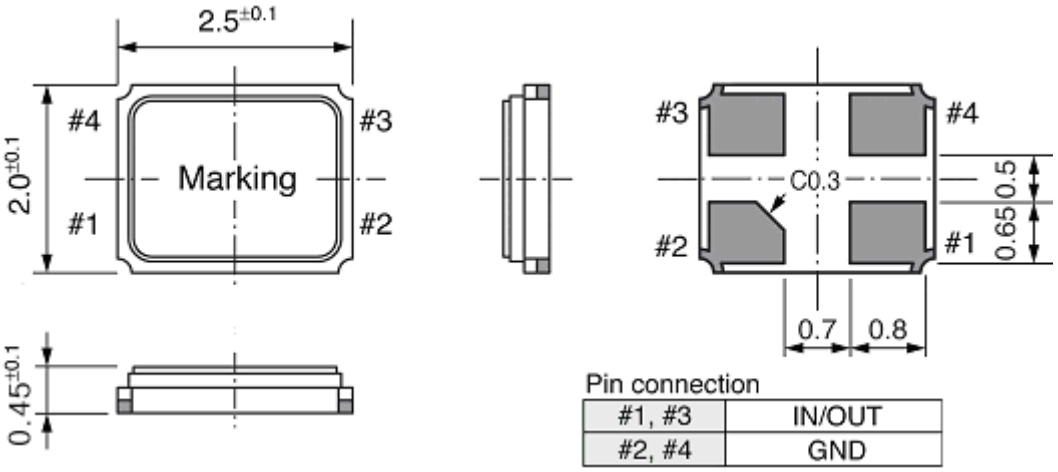

Pin connection

#1, #3	IN/OUT
#2, #4	GND

2) Circuit

(Top View)

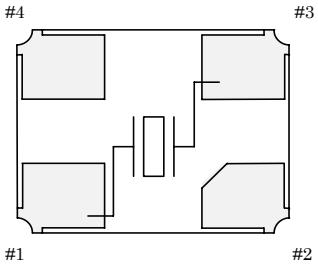

Pin
#1, #3 : X'tal
#2, #4 : GND

Type	FA-20H	Terminal treatment	Au plate	Unit	1 = 1mm

[6] Recommended soldering pattern and Marking layout

1) Recommended soldering pattern

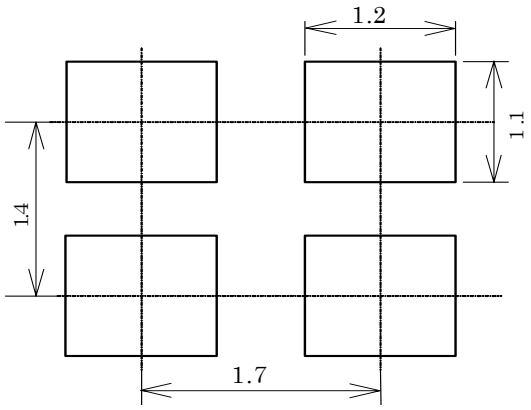

2) Marking layout

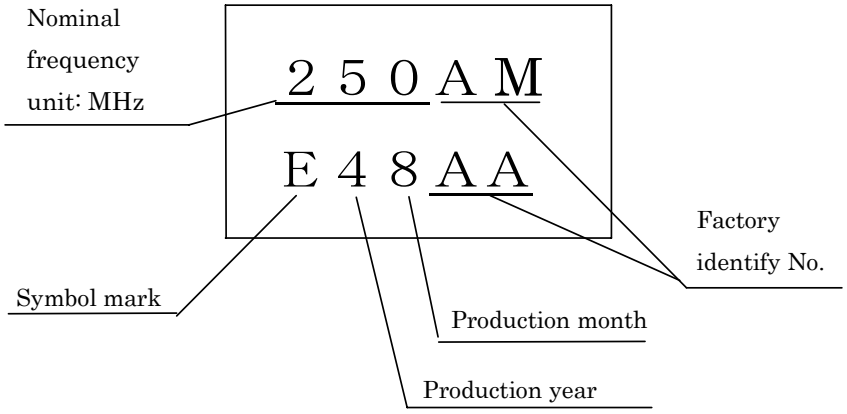

Production month

January	February	.....	October	November	December
1	2	.....	X	Y	Z

- Nominal frequency is only one example.
- Nominal frequency omits the figure below the first place of decimals.
  Ex) 25 MHz..... [250]
- The above marking layout shows only marking contents and their approximate position and it is not for font, size and exact position.

Type : FA-20H	Unit : 1 = 1mm

[7] Notes

1. Max three (3) times re-flow is allowed. Its recommended to manually solder when not enough/no solder detected.(Using soldering iron at +350 °C Max × within 5 seconds)

2. Patterning on a board should follow our company recommended pattern.

3. Applying excessive excitation force to the crystal resonator may cause deterioration damage.

4. Start up time of oscillation may be increased or no oscillation may occur unless adequate negative resistance is allocated in the oscillation circuit In order to avoid this, please provide enough negative resistance to the circuit design.

   How to check the negative resistance

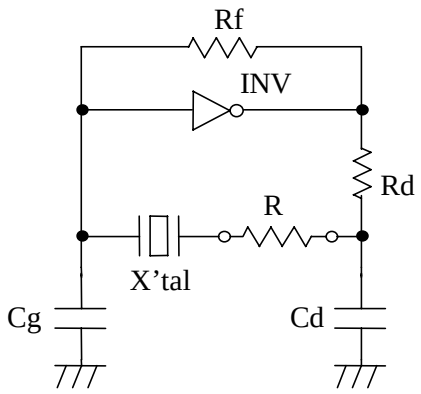

(1) Connect the resister(R) to the circuit in series with the crystal Resonator.

(2) Adjust R so that oscillation can start (or stop).

(3) Measure R when oscillation just start (or stop) in above (2).

(4) Get the negative resistance
-R=R+CI value.

(5) Recommended -R
[-R]>CI × 5

5. It is recommended to do patterning to the oscillator as short as possible. Abnormal oscillation may happened if the line is too long.

6. To avoid malfunction, no pattern across or near the crystal is allowed.
   Solder paste should be less than 100μm thickness.

7. Few data or readings taken at user side may be different from our company's data. Confirmation of the different value is necessary before application.

8. Too much exciting shock or vibration may cause deterioration on damage.
   The product may damage depends on the condition such as a shock in assembly machinery.
   Please check your process condition in advance to minimize and maintain the shock level.

9. Condensation may occur when products are used/stored under remarkable temperature change.

10. Please refer to packing specification for the storage method and packing standard.

11. This product may be affected to ultrasonic cleaning. It is depends on the cleaning conditions (Cleaning machine type/power/time/content/position etc.). The warranty will not cover any damage due to this type of usage. Check conditions prior to use.

TAPING SPECIFICATION

1. APPLICATION

This document is applicable to FA-20H

2. CONTENTS

Item No.	Item	Page
[1]	Taping specification	1 to 2
[2]	Inner carton	3
[3]	Shipping carton	
[4]	Marking	4
[5]	Quantity	
[6]	Storage environment	
[7]	Handling	

[1] Taping specification

Subject to EIA-481 & IEC-60286

(1) Tape dimensions TE0804L

Material of the Carrier Tape : PS (Electrically conductive)

Material of the Top Tape : PET+PE

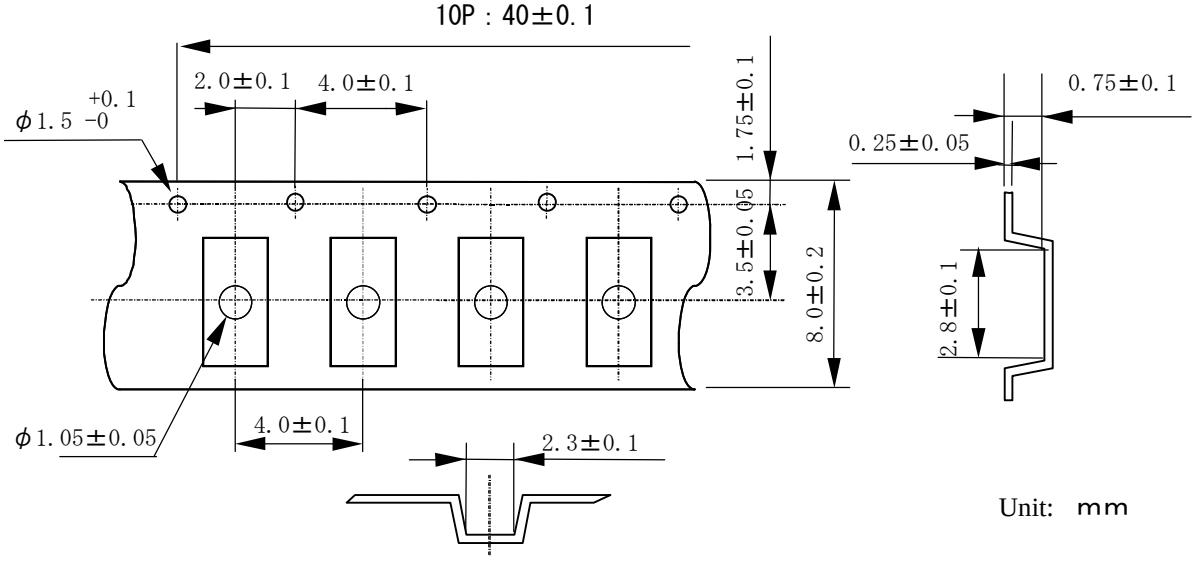

Unit: mm

(2) Reel dimensions

(a) Center material : PS

(b) Material of the Reel : PS

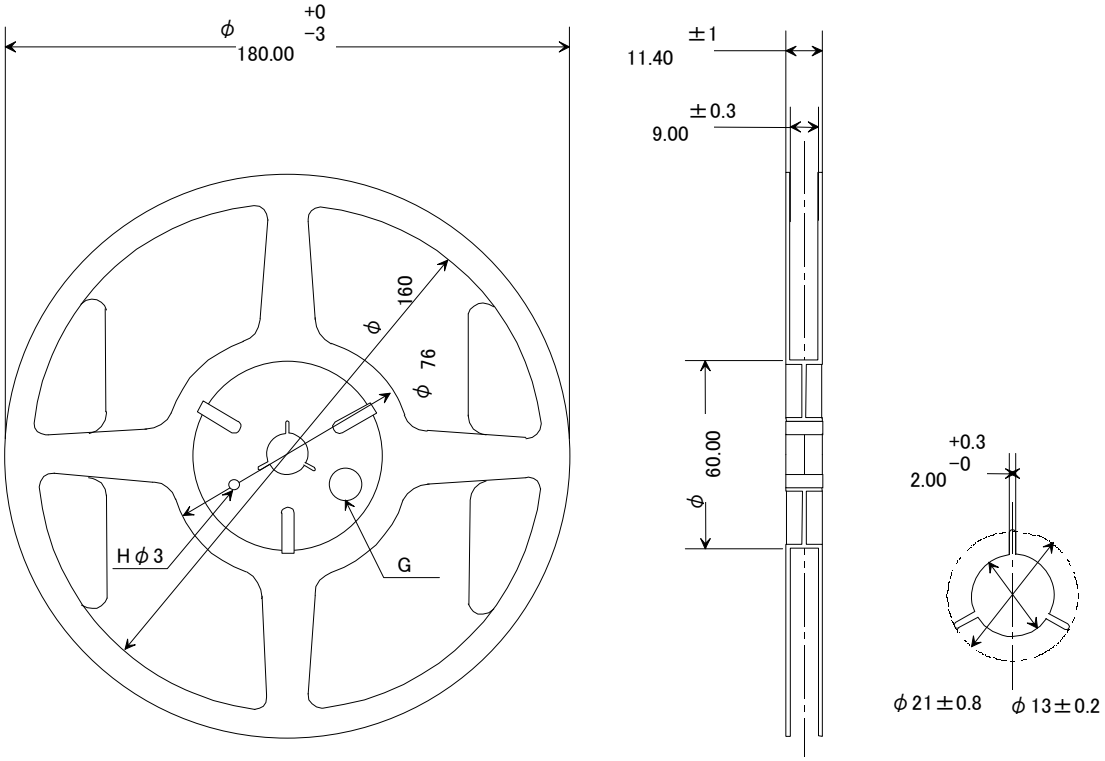

(3) Packing

(a) Tape & Reel

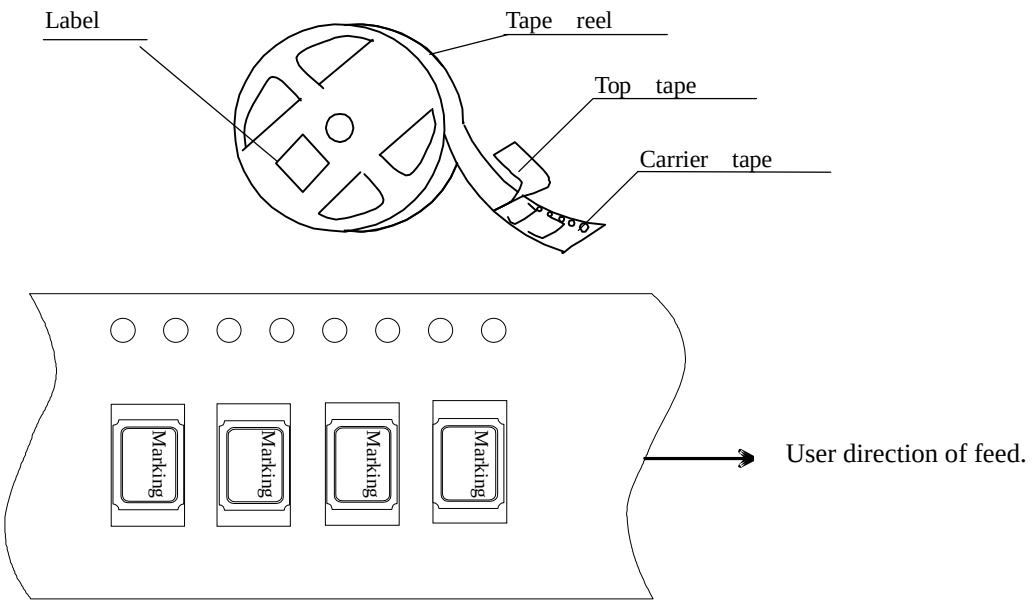

(b) Start & End Point

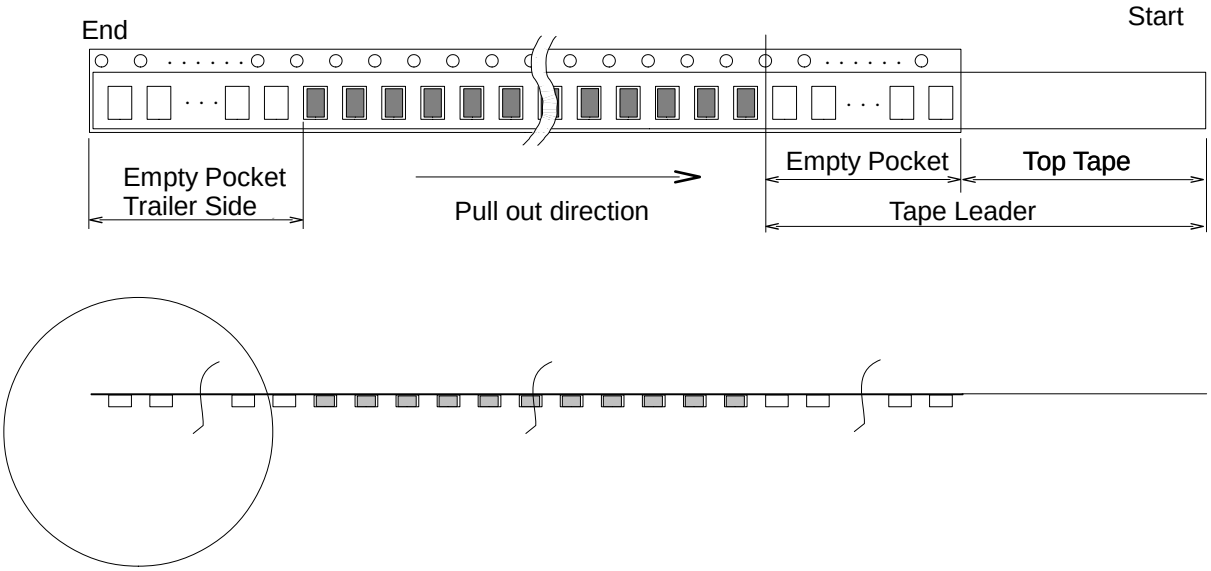

Item		Empty Space
Tape Leader	Top Tape	Min. 1 000 mm
	Carrier Tape	Min. 100 mm
Tape Trailer	Top Tape	Min. 0 mm
	Carrier Tape	Min. 160 mm

(4) Peel force of the cover tape

① angle : cover tape during peel off and the direction of unreeling shall be 165° to 180°.

② peel speed : 300 mm / min.

③ strength : 0.1 to 1 N.

[2] Inner Carton

a) Packing to antistatic bag

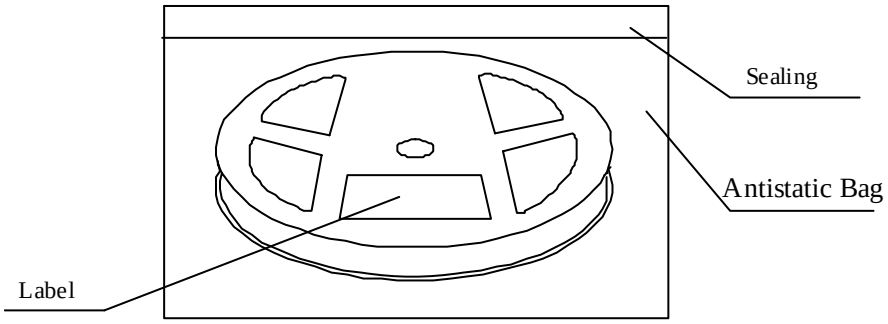

b) Packing to inner carton

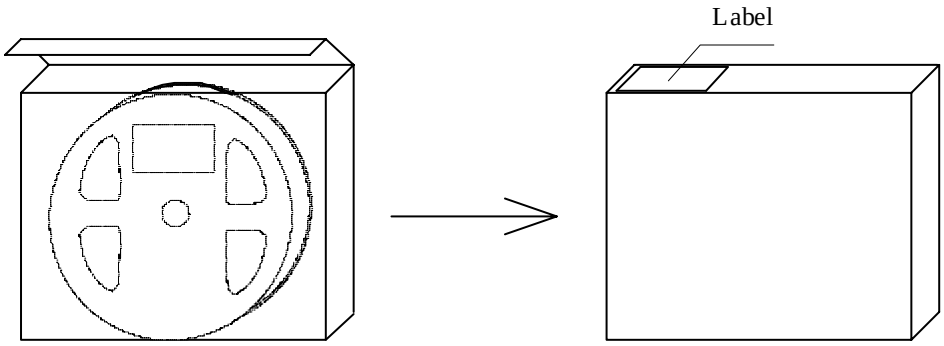

[3] Shipping Carton

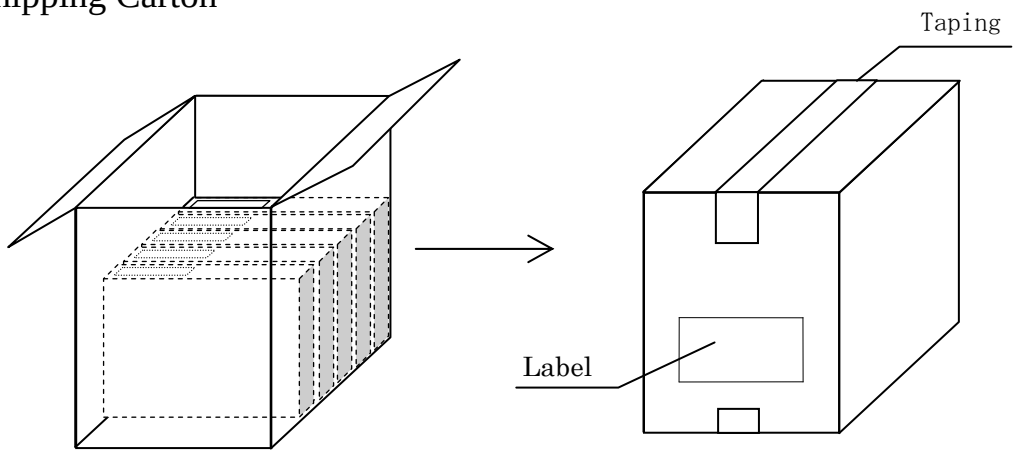

[4] Marking

(1) Reel marking

- Reel marking shall consist of :

1) Parts name
2) Quantity
3) Manufacturing Date or symbol
4) Manufacturer's Date or symbol
5) Others (if necessary)

(2) Inner carton marking

- Same as Reel marking.

(3) Shipping carton marking

- Shipping carton marking shall consist of :

1) Parts name
2) Quantity

[5] Quantity

- 3 000 pcs./reel

[6] Storage environment

(1) Before open the packing, we recommend to keep less than +30 °C and 85 %RH of Humidity, and to use it less than 6 months after delivery.

(2) We recommend to open Package in immediately before use. After open Package, We recommend to keeps less than 6 month. No need dry air before soldering work if it is less than temperature +30 °C, 85 humidity %RH.

(3) Not to expose the sun.

(4) Not to storage with some erosive chemicals.

(5) Nothing is allowed to put on the reel or carton to prevent mechanical damage.

[7] Handling

To handle with care to prevent the damage of tape, reel and products.

- Process Quality Control -

No. IA-0601-01-AIE-4

SMD TYPE AT STRIP CRYSTAL : FA-20H / 206

12.09.14

Manufacturing process shart	No.	Section	Standard	Inspection, Control items	Inspection method	Instrument	Record
Crystal block	1	Inspecting section. (INA plant)	Purchasing specification Incoming inspection standard	Size. Outer appearance. Inner appearance.	Sampling. 〃 〃	Measure. Visual inspection. Visual inspection.	In-coming inspection data sheet.
1 In-coming inspection	1'	Inspecting section. (INA plant)	〃	Size. Outer appearance.	Sampling. 〃	Comparator. Micro scope.	〃
② Wafer cutting	2	Inspecting section. (Ina / China /Thailand Plant)	Manufacturing instruction sheet	Cut angle. Wafer thickness.	Sampling. 〃	X-ray raido grafic. Comparator.	Process data sheet.
③ Wafer lapping	3	Producing section. (Ina / China /Thailand Plant)	〃	Frequency. Wafer thickness.	Sampling. 〃	Frequency counter. Comparator.	〃
Ceramic base ④ Chip cutting	4	Producing section. (Ina / China /Thailand Plant)	〃	Size.	Sampling.	Comparator.	〃
⑤ Etching	5	Producing section. (Ina / China /Thailand Plant)	〃	Frequency. Outer appearance.	Sampling. 〃	Comparator. Micro scope.	〃
1' In-coming inspection ⑥ Deposition	6	Producing section. (Ina / Thailand / Malaysia Plant)	〃	Frequency. Outer appearance.	Sampling. 〃	Comparator. Micro scope.	〃
Lid ⑦ Mounting	7	Producing section. (Ina / Thailand / Malaysia Plant)	〃	Outer appearance.	All insprcion.	Micro scope.	〃
In-coming ⑧ Frequency adjustment 1' inspection	8	Producing section. (Ina / Thailand / Malaysia Plant)	〃	Frequency.	Sampling.	Frequency counter.	〃
⑨ Welding	9	Producing section. (Ina / Thailand / Malaysia Plant)	〃	Outer appearance.	Sampling.	Micro scope.	〃
10 Leak test	10	Producing section. (Ina / Thailand / Malaysia Plant)	〃	Airtightness check.	All insprcion.	Leak tester.	〃
⑪ Marking	11	Producing section. (Ina / Thailand / Malaysia Plant)	〃	Outer appearance.	Sampling.	Micro scope.	〃
12 Characteristic inspection	12	Producing section. (Ina / Thailand / Malaysia Plant)	〃	Crystal impedance. Frequency. Insulation resistance. Temp. characteristic.	All insprcion. 〃 〃 Sampling.	Inspectional machine. 〃 〃 〃	〃
13 Out-going inspection	13	Inspecting section. (Ina / Thailand / Malaysia Plant)	Out-going inspection standard	Crystal impedance. Frequency. Insulation resistance. Outer appearance.	Sampling. 〃 〃 〃	Inspection M/C. 〃 〃 Micro scope.	Out-going inspection data sheet.
⑭ Taping	14	Producing section. (Ina / Thailand / Malaysia Plant)	Manufacturing instruction sheet	Tape-peel strength.	Sampling.	Peelinf force tester.	Process data sheet.
⑮ Packing	15	Product control section. (Ina / Thailand / Malaysia Plant)	Manufacturing instruction sheet Packing instruction sheet	Address. Quantity.	—	—	Delivery slip.

FA－20H Construction Drawing

No. : A-0601-AE-1

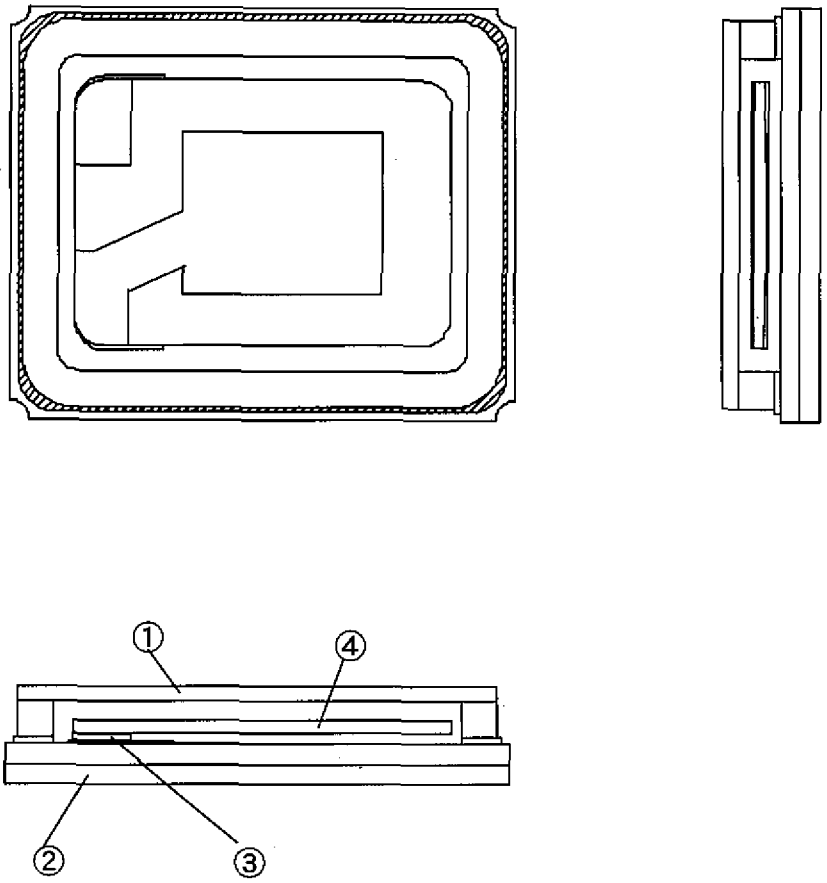

No	Parts name	Material	Surface treatment
①	LID	Cover	Ni Plating
②	BASE	Ceramic・Cover	Au Plating
③	Ag Paste	Bonding Paste of Electric Conductor	
④	Crystal Chip	Crystal	Electrode Pattern(Cr+Au)

RELIABILITY TEST DATA

Product Name : FA-20H

The Company evaluation condition

We evaluate environmental and mechanical characteristics by the following test condition . **No.A-06014-1-001E**

No.	ITEM	TEST CONDITIONS	VALUE *1 *2 $\Delta f / f$ [1×10^{-6}]	TEST Qty [n]	FAIL Qty [n]
1	Shock	150g dummy Jig (EPSON TOYOCOM Standard) drop from 1500 mm height on the Concrete	*3 ± 2	22	0
2	Vibration	10 Hz to 55 Hz amplitude 0.75 mm 55 Hz to 500 Hz acceleration 98 m/s^2 10 Hz → 500 Hz → 10 Hz 15 min / cycle 6 h (2 h × 3 directions)	*3 ± 2	22	0
3	High temperature storage	+85 °C × 1 000 h	*3 ± 2	22	0
4	Low temperature storage	-40 °C × 1 000 h	*3 ± 2	22	0
5	Temperature humidity storage	+85 °C × 85 %RH × 1 000 h	*3 ± 2	22	0
6	Temperature cycle	-40 °C ⇔ + 85 °C 30 min at each temp. 100 cycles	*3 ± 2	22	0
7	Resistance to soldering heat	For convention reflow soldering furnace (3 times)	± 2	22	0
8	Substrate bending	Bend width reaches 3.0 mm and hold for 5 s ± 1 s × 1 time Ref. IEC 60068-2-21	No peeling - off at a solder part	11	0
9	Shear	10 N press for 10 s ± 1 s Ref. IEC 60068-2-21	No peeling - off at a solder part	11	0
10	Pull - off	10 N press for 10 s ± 1 s Ref. IEC 60068-2-21	No peeling - off at a solder part	11	0
11	Solderability	Dip termination into solder bath at +235 °C ±10 °C for 5 s (Using Rosin Flux)	Termination must be 95 % covered with fresh solder	11	0

Notes

1. *1 Each test done independently.
2. *2 Measuring 2 h to 24 h later leaving in room temperature after each test.
3. *3 Measuring 24 h later leaving in room temperature after each test.
    1. Reflow 3 times
    2. Initial value shall be after 24h at room temperature.
4. Shift series resistance at before above tests should be less than ±20 % or less than ±10 Ω .

Qualification Data

Product Name : FA-20H

Δf/f

No.A-06014-1-002E

1. Shock

150g × 1500 mm × 3 directions × 10 times

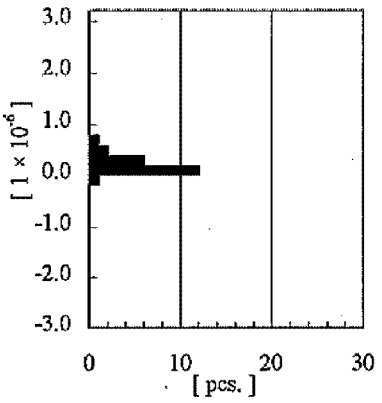

2. Vibration

10 Hz to 55 Hz amplitude 0.75 mm
55 Hz to 500 Hz acceleration 98 m/s²
15 min / cycle 6 h (2 × 3 directions)

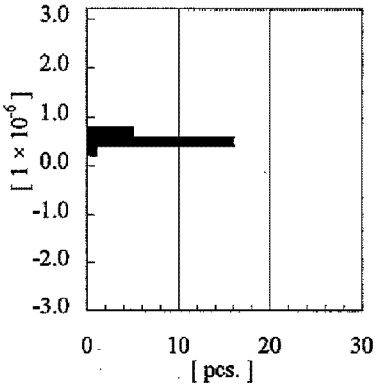

3. High temp. storage

+85 °C × 1 000 h

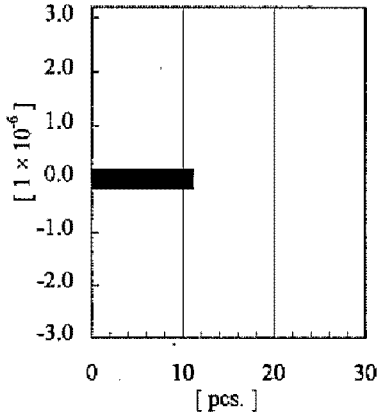

4. Low temp. storage

-40 °C × 1 000 h

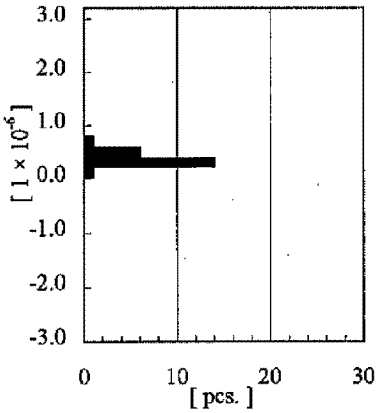

5. Temp. humidity storage

+85 °C × 85 %RH × 1 000 h

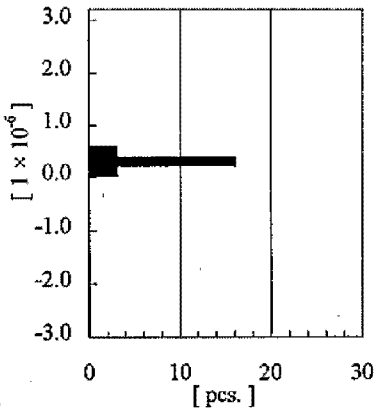

6. Temp. cycle

-40 °C ⇔ +85 °C
100 cycles

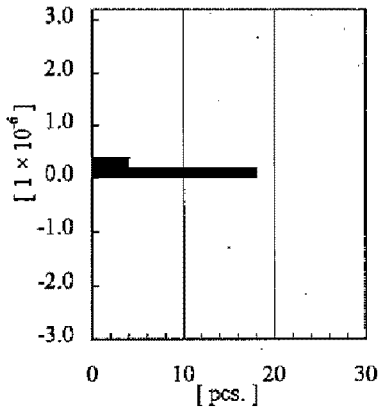

7. Resistance to soldering heat

For convention reflow soldering furnace (3 times)

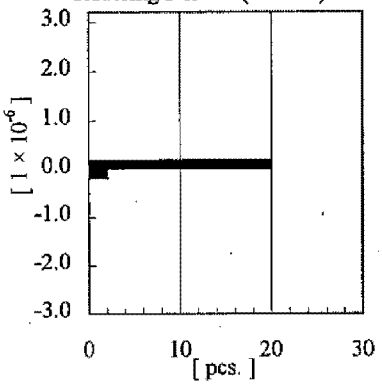

Qualification Data

Product Name : FA-20H

Δ CI

No.A-06014-1-003E

1. Shock

150g × 1500 mm ×
3 directions × 10 times

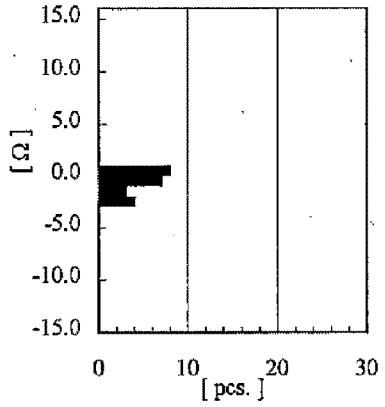

2. Vibration

10 Hz to 55 Hz amplitude 0.75 mm
55 Hz to 500 Hz acceleration 98 m/s²
15 min /cycle 6 h (2 h ×3 directions)

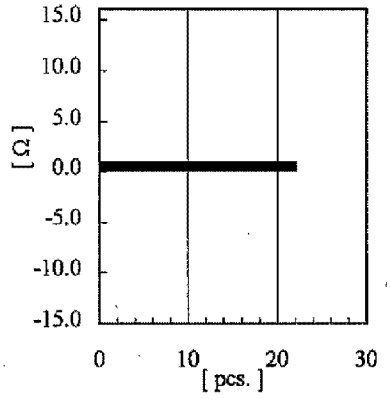

3.High temp. storage

+85 °C × 1 000 h

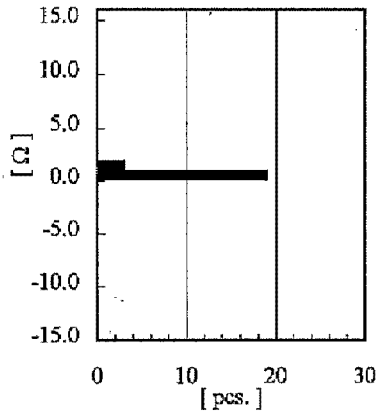

4. Low temp. storage

-40 °C × 1 000 h

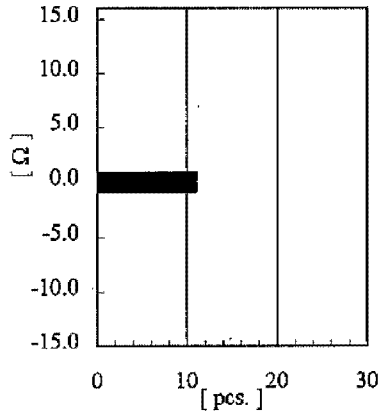

5. Temp. humidity storage

+85 °C × 85 %RH × 1 000 h

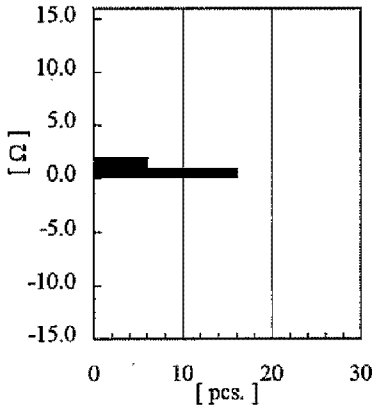

6. Temp. cycle

-40 °C ⇔ +85 °C
100 cycles

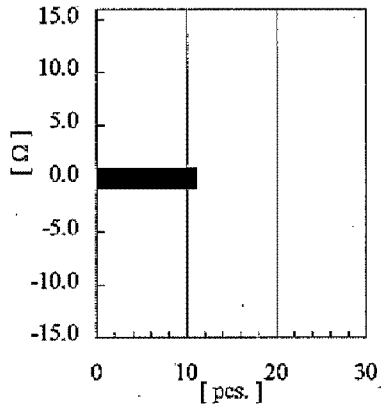

7. Resistance to soldering heat

For convention reflow
soldering furnace (3 times)

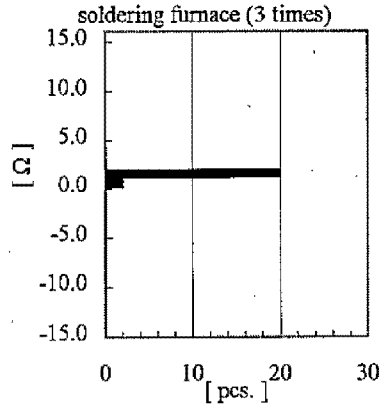

Qualification Data