PRODUCT SPECIFICATION SHEET



PRELIMINARY DATASHEET

Customer	-		
Customer P/N	-		
Product Type	Quartz Crystal Resonator		
Part Number	9Y25000008	**Version**	S0
Part Description	SMD X'tal 2.0 x 1.6		
Nominal Frequency	25.000000MHz		

Prepared	Li Xiang
Reviewed	Liao Xiaohua
Approved	Liu Feng
Date	2024/7/2

Customer's Approval & Date：

广东惠伦晶体科技股份有限公司
中国广东省东莞市黄江镇东环路鸡啼岗段68号
68 Donghuan Road, Jitigang Village, Huangjiang, Dongguan, Guangdong Province, P. R. China
WEB : http://www.dgylec.com/
TEL : +86 (0) 769 - 38879888
FAX : +86 (0) 769 - 38879889
EMAIL : yl@dgylec.com

MSL1 Moisture Sensitivity Level

Pb Lead-Free

RoHS Compliant

AEC-Q200 Qualified

TABLE OF CONTENTS

#	Item	Page
1	History of Specification Revision	3
2	Electrical Specifications	4
	2.1 Gerneral specification	4
	2.2 Operation conditions	4
	2.3 Frequency stability & electrical parameters	4
3	Product Design	5
	3.1 Package dimensions and pad functions	5
	3.2 Recommended land pattern	5
	3.3 Recommended reflow profile	5
	3.4 Illustration to product structure	6
4	Reliability	7
	4.1 Mechanical endurance	7
	4.2 Environmental endurance	8
5	Marking and Packing	9
	5.1 Marking definition	9
	5.2 Packing	10
	5.3 SMD product packing standard	11
6	Environmental Substances	12

PRELIMINARY DATASHEET

ATTENTION

[1] If you intend to use products on the controlling equipment that relate to medical, aeronautical, aerospace, military science, space and etc., please make sure to let us know your intentions in advance.

[2] Ultrasonic related process may cause damage to crystal blank by resonance itself. If ultrasonic related process is used, we strongly recommend to assess the damage risk under related ultrasonic conditions before use in production.

1. History of Specification Revision

Ver.	Contents	Date	Reviser	Remark
S0	Initial released	2024/7/2	Li Xiang	

PRELIMINARY DATASHEET

2. Electrical Specifications

2.1 General specification

#	Parameter	Value/Description	Unit	Remark
1	Nominal frequency	25.000000	MHz	-
2	Cutting type	AT-cut	-	-
3	Oscillation mode	Fundamental	-	-
4	Moisture sensitivity level (MSL)	Level 1	-	J-STD-020
5	ESD	HBM ≥ 2000V	-	ANSI/ESDA/JEDEC JS-001

2.2 Operation conditions

#	Parameter	Min.	Typ.	Max.	Unit	Remark
1	Operating temperature	-40	-	+105	°C	-
2	Storage temperature	-40	-	+125	°C	-
3	Load capacitance (C_L)	-	8	-	pF	-
4	Drive level	-	-	100	μW	-

2.3 Frequency stability & electrical parameters

#	Parameter	Min.	Typ.	Max.	Unit	Remark
1	Initial frequency tolerance	-15	-	+15	ppm	At 25±3°C and specific load, refer to nominal frequency
2	Frequency stability	-30	-	+30	ppm	Within operating temperature range, refer to frequency at 25°C
3	Frequency aging (First year)	-3	-	+3	ppm	At 25±3°C
4	Equivalent series resistance (ESR)	-	-	80	ohms	-
5	Shunt capacitance (C0)	-	-	3	pF	-
6	Insulation resistance	500	-	-	M-ohms	At DC 100V

PRELIMINARY DATASHEET

Measure equipment: Electrical characteristics is measured by S&A 250B or equivalent.

Standard atmospheric conditions:

Unless otherwise specified, the standard environmental conditions for performance measurement and tests are under ambient temperature at (25±3)°C and relative humidity: 40% to 70%.

3. Product Design

3.1 Package dimensions and pad functions (Unit : mm)

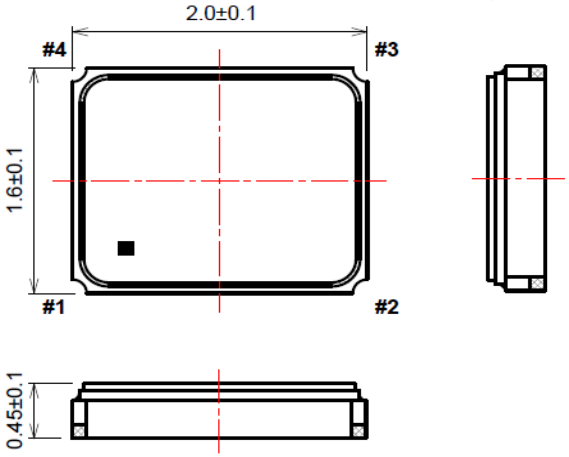

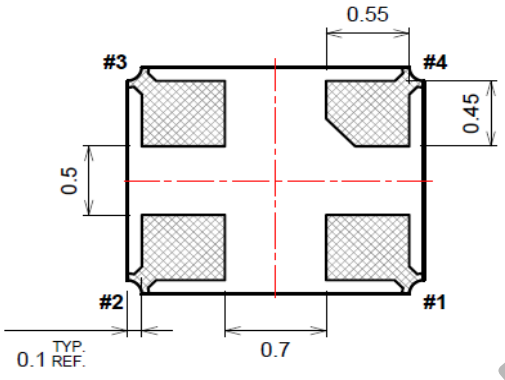

Unit : mm

Tolerance unless otherwise specified: ±0.1mm.

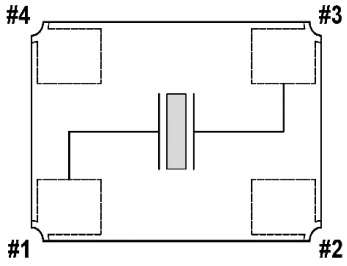

Pad	Function
#1	X'tal terminal (Input/output)
#2	GND terminal
#3	X'tal terminal (Input/output)
#4	GND terminal

3.2 Recommended land pattern (Unit : mm)

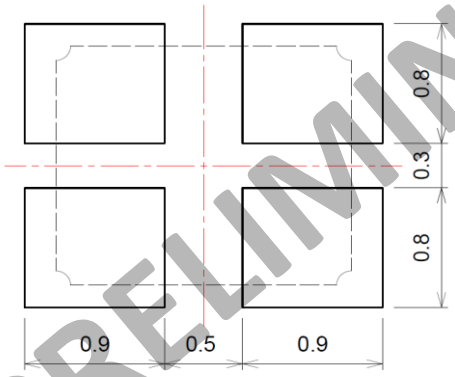

Unit : mm

3.3 Recommended reflow profile

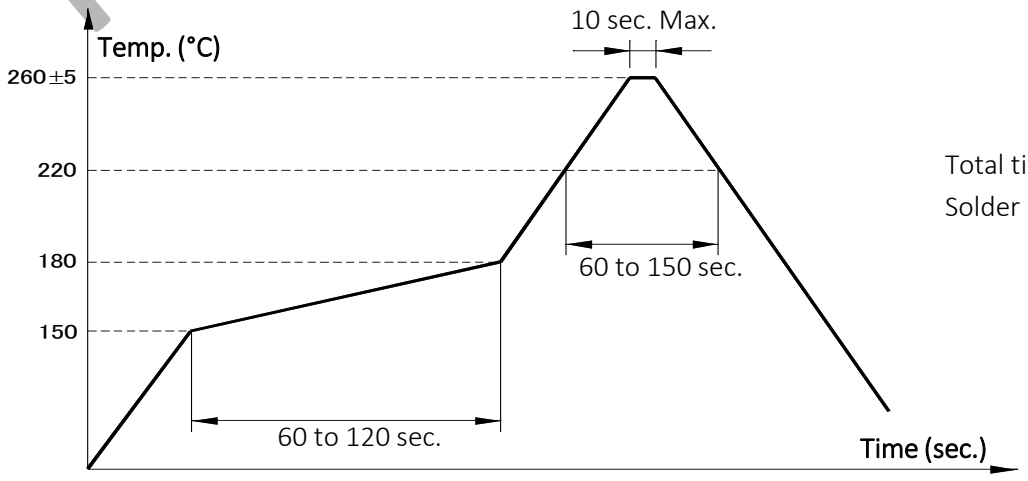

Total time : 360 sec. Max.

Solder melting point : 225°C

PRELIMINARY DATASHEET

3. Product Design (Cont.)

3.4 Illustration to product structure

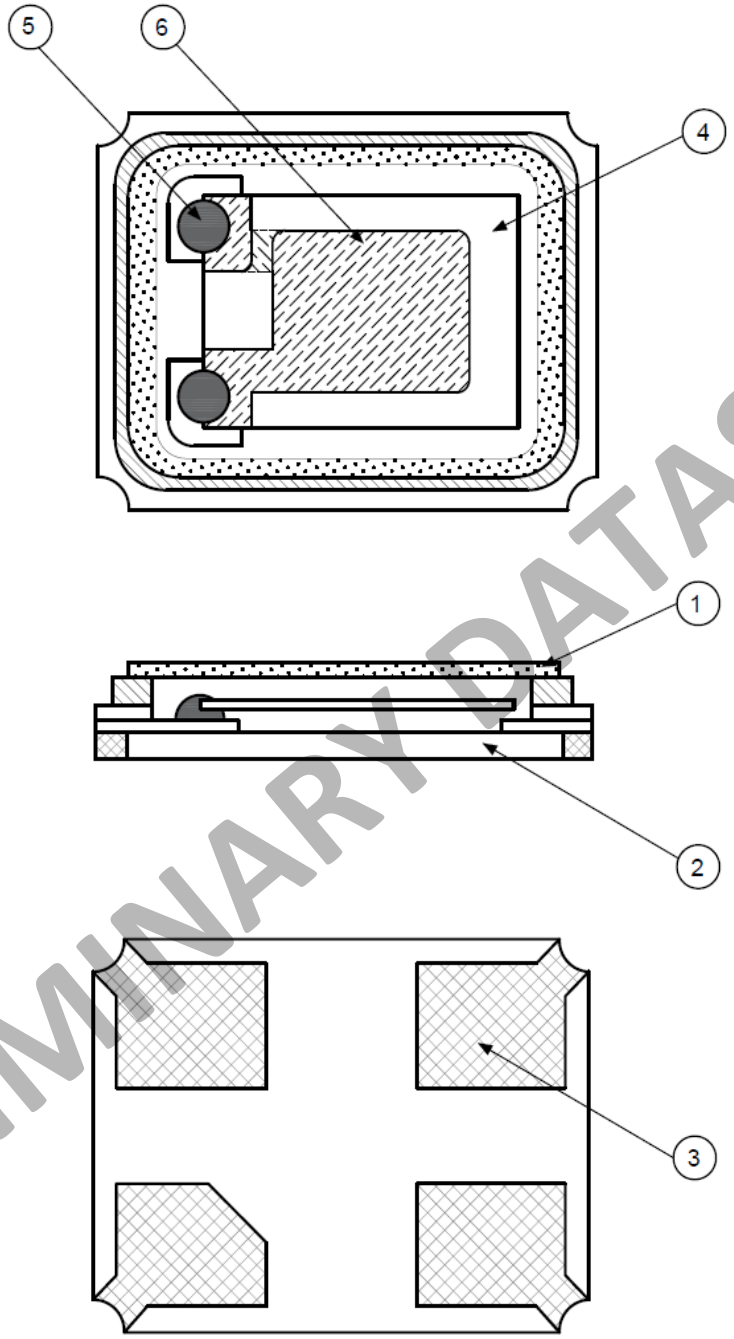

PRELIMINARY DATASHEET

#	Components	Materials	Finish
1	Cap (Lid)	Kovar (Fe-Co-Ni)	Ni plating
2	Base (Package)	Almina ceramics (Al_2O_3)	-
3	Pad (Package)	Ni + Au	Ni + Au plating
4	Crystal blank	SiO_2	-
5	Conductive adhesive	Ag	Silicone resin
6	Electrode	Noble metal	-

4. Reliability

Test items and conditions

#	Item	Test Condition	Reference
1	High temperature exposure (storage)	1000 hours, unpowered. Tested at maximum specified operating temperature or maximum specified storage temperature (whichever is higher).	AEC-Q200 Test 3 MIL-STD-202 Method 108
2	Temperature cycling	1000 cycles, unpowered. Lower temperature of the chamber: -55°C. Upper temperature of the chamber: maximum specified operating temperature and shall not exceed 85°C. Dwell time (soak time): 30 minutes. Transition time: 1 minute maximum.	AEC-Q200 Test 4 JESD22-A104
3	Humidity bias	1000 hours. 85°C/85%RH with V_{DD} applied.	AEC-Q200 Test 7 MIL-STD-202 Method 103
4	High temperature operating life	1000 hours, with V_{DD} applied. Temperature of the chamber: maximum specified operating temperature up to 150°C.	AEC-Q200 Test 8 MIL-STD-202 Method 108
5	External visual	Inspect device construction, marking and workmanship. Pre and post electrical test not required.	AEC-Q200 Test 9 MIL-STD-883 Method 2009
6	Physical dimensions	Verify physical dimensions to the applicable component specification. Pre and post electrical test not required.	AEC-Q200 Test 10 JESD22-B100
7	Mechanical shock	Condition C, 100g's, 6 msec., half-sine, three shocks in each direction along the three mutually perpendicular axes.	AEC-Q200 Test 13 MIL-STD-202 Method 213
8	Vibration	Test from 10 Hz to 2000 Hz. 5g's for 20 minutes. 12 cycles each of 3 orientations.	AEC-Q200 Test 14 MIL-STD-202 Method 204
9	Resistance to soldering heat	Condition K, time above 217 °C , 60 sec. to 150 sec., reflow 3 cycles.	AEC-Q200 Test 15 MIL-STD-202 Method 210

PRELIMINARY DATASHEET

4. Reliability (Cont.)

Test items and conditions (Cont.)

#	Item	Test Condition	Reference
10	Solderability	Method B1, Coating Durability Category 2. Method D, Coating Durability Category 2. Pre and post electrical test not required.	AEC-Q200 Test 18 J-STD-002
11	Electrical characterization	Summary to show minimum, maximum, mean and standard deviation at room, minimum and maximum operating temperatures. Pre and post electrical test not required.	AEC-Q200 Test 19 Product specification sheet
12	Board flex (SMD)	Board bending displacement: 2.5 mm, holding time: 60 sec.	AEC-Q200 Test 21 AEC-Q200-005
13	Terminal strength (SMD)	Force: 1.8 kg, holding time: 60 sec.	AEC-Q200 Test 22 AEC-Q200-006

PRELIMINARY DATASHEET

5. Marking and Packing

5.1 Marking definition

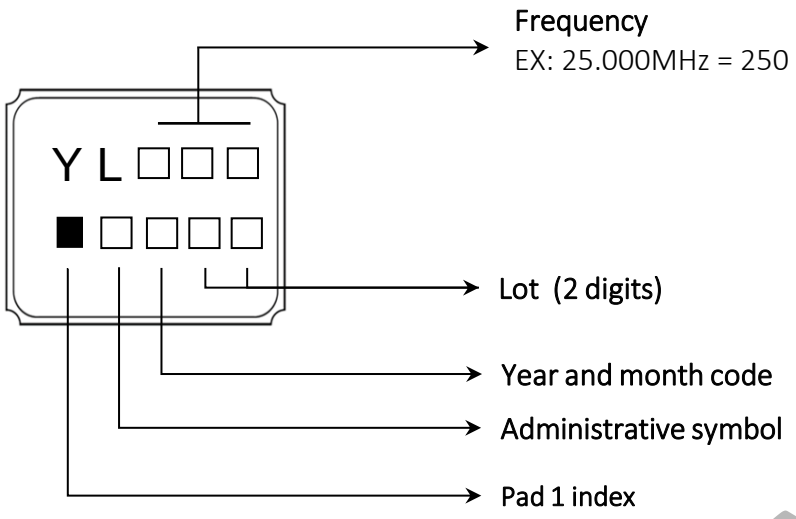

Table of Year and Month code

Year \ Month	JAN	FEB	MAR	APR	MAY	JUN	JUL	AUG	SEP	OCT	NOV	DEC
2021	2025	A	B	C	D	E	F	G	H	J	K	L	M
2022	2026	N	P	Q	R	S	T	U	V	W	X	Y	Z
2023	2027	a	b	c	d	e	f	g	h	j	k	l	m
2024	2028	n	p	q	r	s	t	u	v	w	x	y	z

5.2 Packing (EIA-481-2)

8mm-4mm，3000pcs / reel，ϕ178；

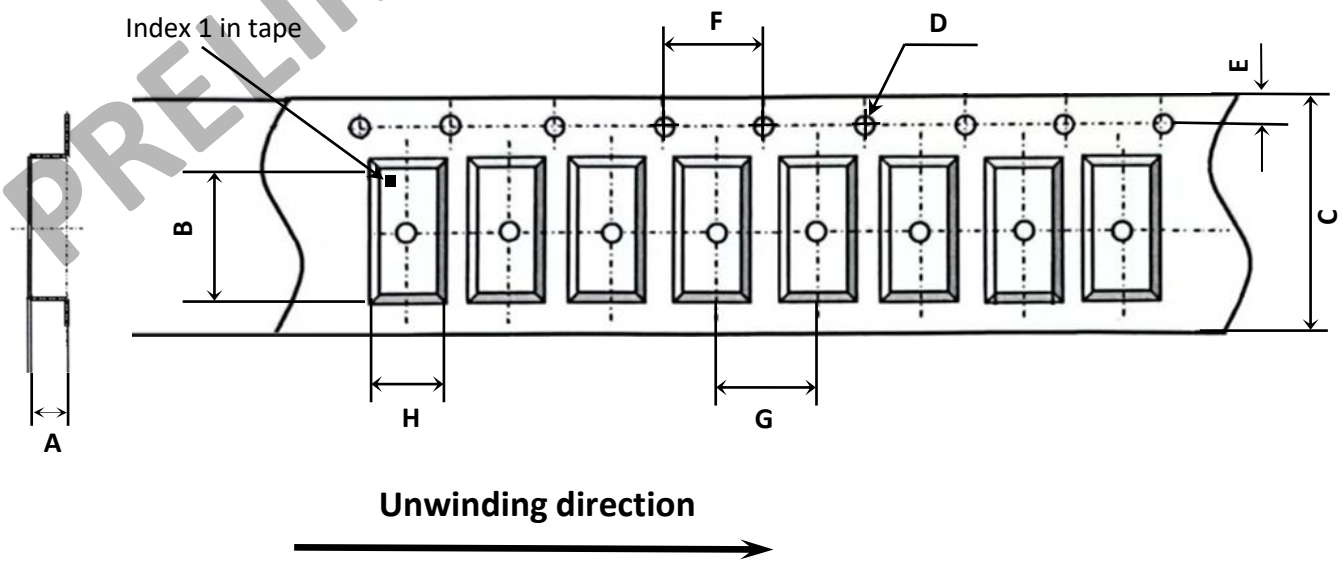

Tape dimension (Unit : mm)							
A	B	C	D	E	F	G	H
0.65±0.1	2.3±0.1	8.0±0.3	1.55±0.05	1.75±0.1	4.00±0.2	4.00±0.1	1.90±0.1

PRELIMINARY DATASHEET

5. Marking and Packing (Cont.)

5.2 Packing (EIA-481-2) (Cont.)

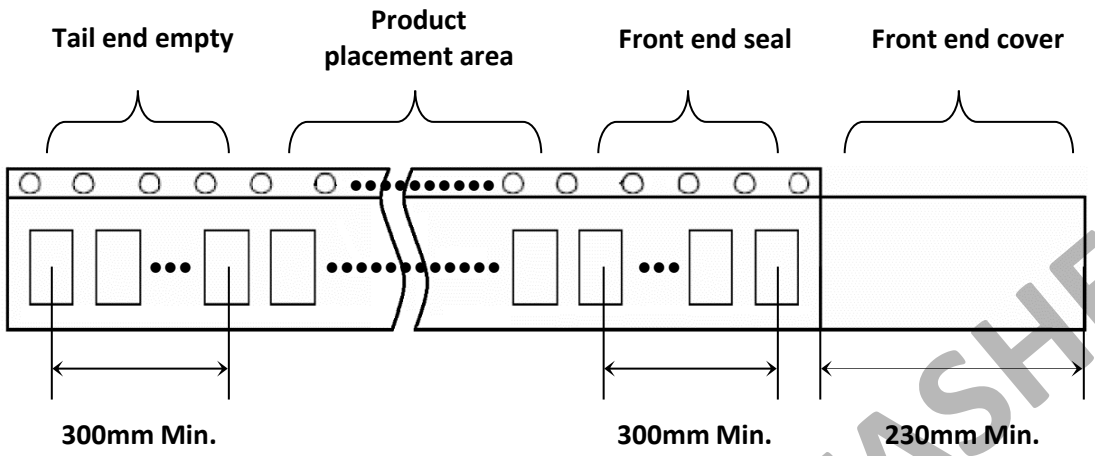

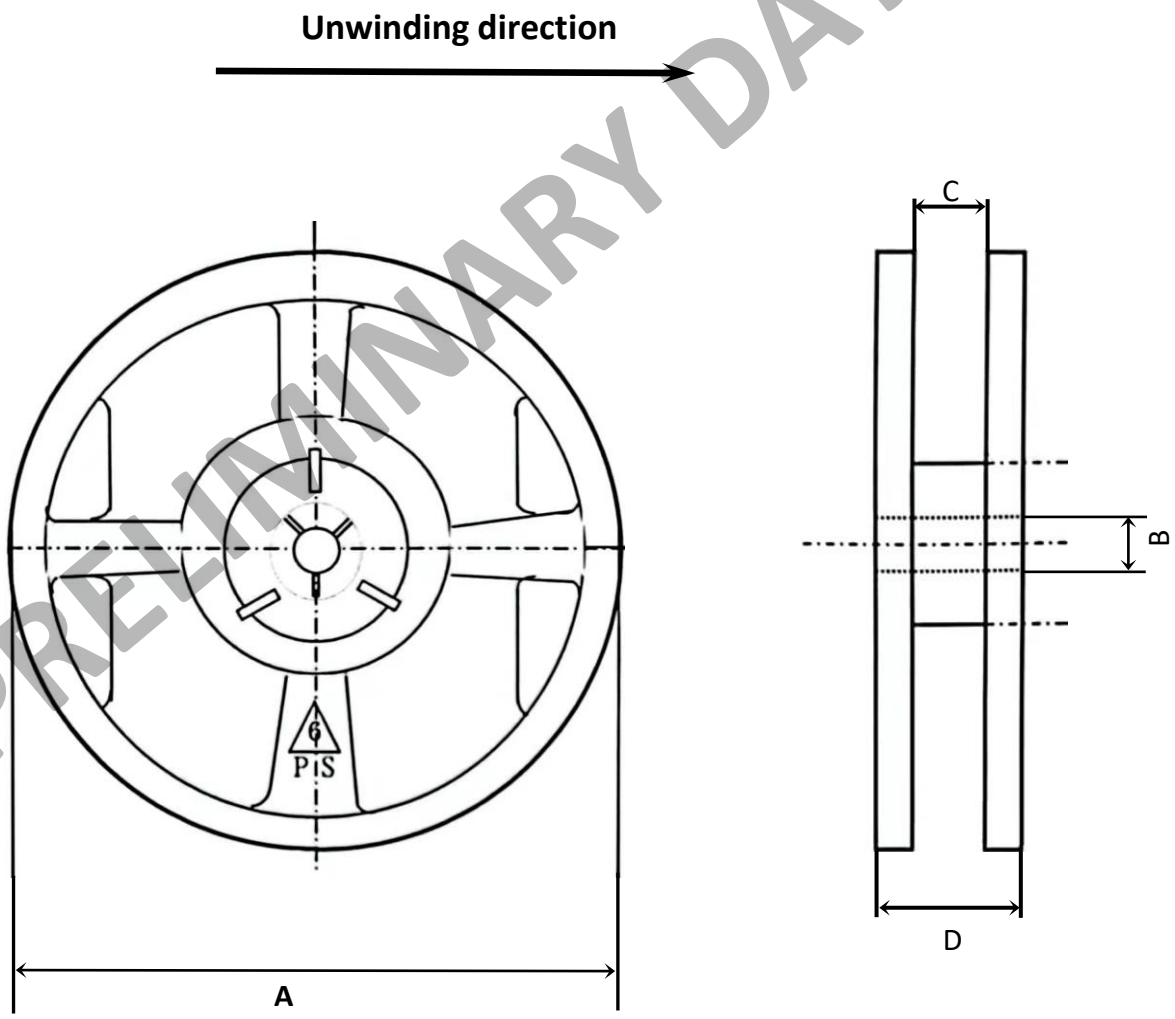

3,000 pcs/reel

Reel dimension (Unit : mm)			
A	B	C	D
178±2.0	13.2±0.5	9.0±0.5	11.5±1.4

PRELIMINARY DATASHEET

5. Marking and Packing (Cont.)

5.3 SMD product packing standard

Out-going packing instruction

Reel packing	Inner packing	Carton
Name: reel Standard: diameter 18cm Material: plastics	Name: bubble wrap Standard: 430×330×20mm Material: HDPE Quantity: 15 reels	Name: carton Standard: 400×400×280mm Material: AB corrugated paper Quantity: 4 bags
		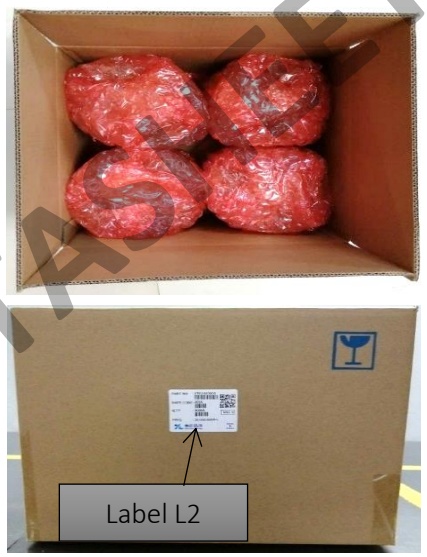

The label instruction

Label drawing	Mark	Name of article	Items	Size	Printing
	L1	Bar code label (Chintz paper)	1. Part No. 2. Lot No. 3. Q'ty 4. Freq	70x50mm	White
	L2	Bar code label (Chintz paper)	1. Part No. 2. Date Code 3. Q'ty 4. Freq	70x50mm	White

Remark: The above instruction of label drawing is used for template and may vary with different product specifications . If customer has specified requirements for labels packaging, please provide the operation procedure.

Product storage conditions:

[1] Temperature: 15 to 35°C.

[2] Humidity: 30 to 70% RH.

[3] Time: within 6 months after delivery.

[4] Please store the products in a dry, clean, well-ventilated area and avoid direct sunlight exposure, heat, and vibration.

PRELIMINARY DATASHEET

6. Environmental substance

#	Banned substances	Max. concentration (ppm; mg/kg)	
		Products	Packing
1	Cadmium (Cd) and cadmium compounds 镉及镉化合物	100	100
2	Lead (Pb) and lead compounds 铅及铅化合物	1,000	100
3	Mercury (Hg) and mercury compounds 汞及汞化合物	1,000	100
4	Hexavalent-chromium VI (Cr+6) 六价铬化合物	1,000	100
5	Polybrominated biphenyls (PBBs) 聚溴联苯 PBB	1,000	N/A
6	Polybrominated diphenyl ethers (PBDEs) 聚溴二苯醚 PBDE	1,000	N/A
7	Di (2-ethylhexyl) phthalate (DEHP) 邻苯二甲酸二(2-乙基己基)酯 DEHP	1,000	N/A
8	Butyl benzyl phthalate (BBP) 邻苯二甲酸丁苄酯 BBP	1,000	N/A
9	Dibutyl phthalate (DBP) 邻苯二甲酸二丁酯 DBP	1,000	N/A
10	Diisobutyl Phthalate (DIBP) 邻苯二甲酸二异丁酯 DIBP	1,000	N/A
11	Fluorine (F), Chlorine (Cl), Bromine (Br), Iodine (I) 氟(F)、氯(Cl)、溴(Br)、碘(I)	900, 900, 900, 900 Note : Br + Cl < 1,000	N/A
12	Heavy metals (Hg, Cd, PB, Cr+6, PBBs and PBDEs) in packing materials 包装材料中重金属(汞、镉、六价铬、铅、PBB、PBDE)之总量	N/A	100 铅(Pb) + 镉(Cd) + 汞(Hg) + 六价铬(Cr+6) <100ppm
13	(SVHC) Substances of very high concern 高度关注物质	1,000	N/A

PRELIMINARY DATASHEET