RECIPIENT

SPECIFICATIONS

Customer p/n : 8928310371

Product No. : X1E000381A14400

MODEL : FA2016AA

SPEC. No. : A20-190-1B

DATE : Jul. 2. 2020

SEIKO EPSON CORPORATION

8548 Naka-minowa
Minowa-machi Kamiina-gun
Nagano-ken
399-4696 Japan

CHECKED S. Miyasaka / TD Engineering Department Manager
Shinichi Miyasaka

CHECKED / TD Production Engineering Department Senior Staff
Masashi Shirotori

CHECKED / TD・CS Quality Assurance Department Manager
Yoshitaka Kurahashi

PREPARED / TD・CS Quality Assurance Department Senior Staff
Emi Oguchi

SPECIFICATIONS

1. Application

1) This document is applicable to the crystal unit FA2016AA that are delivered.
to from Seiko Epson Corp.

2) This product is compliant with RoHS Directive.

3) This Product supplied (and any technical information furnished, if any) by Seiko Epson Corporation shall not be used for the development and manufacture of weapon of mass destruction or for other military purposes. Making available such products and technology to any third party who may use such products or technologies for the said purposes are also prohibited.

4) This product listed here is designed as components or parts for electronics equipment in general consumer use. We do not expect that any of these products would be incorporated or otherwise used as a component or part for the equipment, which requires an extra high reliability, such as satellite, rocket and other space systems, and medical equipment, the functional purpose of which is to keep life.

5) This FA2016AA is authorized for Navigation system for automobile only.

6) This product conforms to automotive part standard " AEC-Q200 ".

2. Product No. / Model

X1E000381A14400 / FA2016AA

3. Packing

It is subject to the packing standard of Seiko Epson Corp.

4. Warranty

Defective parts which originate with us are replaced free of charge in the case of defects being found with 12 months after delivery.

5. Amendment and/or termination

Amendment and/or termination of this specification is subject to the agreement between the two parties.

6. Contents

Item No.	Item	Page
[1]	Absolute maximum ratings	2
[2]	Operating range	2
[3]	Electrical characteristics	2
[4]	Environmental and mechanical characteristics	3
[5]	Dimensions and circuit	4
[6]	Recommended soldering pattern and marking layout	5
[7]	Notes	6

[1] Absolute maximum ratings

No.	Parameter	Symbol	Rating value			Unit	Note
			Min	Typ.	Max.		
1	Storage temperature	T_{stg}	-40	–	+125	°C	Depends on the Environmental Characteristics specifications.

[2] Operating range

No.	Parameter	Symbol	Value			Unit	Note
			Min	Typ.	Max.		
1	Operating temperature	T_{use}	-40	–	+105	°C	
2	Drive level	DL	1	100	200	µW	

[3] Electrical characteristics

No.	Parameter	Symbol	Standard	Unit	Conditions
1	Nominal frequency	f_nom	48	MHz	Fundamental
2	Frequency tolerance	f_tol	±10	$\times 10^{-6}$	CL = 8 pF Ta = +25 °C ±3 °C DL = 100 µW Not include aging
3	Motional resistance	R_1	60 Max.	Ω	π circuit IEC 60444-2 T_use = Operating temperature range DL : 100 µW
4	Shunt capacitance	C_0	3 Max.	pF	π circuit and N.A.
5	Frequency versus temperature characteristics	f_tem	±20	$\times 10^{-6}$	T_use = Operating temperature range Ref. at +25 °C ±3 °C DL : 100 µW
6	Isolation resistance	IR	500 Max.	MΩ	DC 100 V, 60 seconds between each terminals (#1, #3)
7	Aging	f_age	±3	$\times 10^{-6}$ / year	Ta = +25 °C ±3 °C DL : 100 µW

[4] Environmental and mechanical characteristics

(The company evaluation condition : We evaluate it by the following examination item and examination condition.)

No.	Item	Value *1 *2		Test Conditions
		$\Delta f / f$ [$1x10^{-6}$]		
1	Drop	*3	±3	150 g dummy Jig (Seiko Epson Standard) drop from 1500 mm height on the Concrete 6 directions 10 times
2	Vibration	*3	±3	10 Hz～40 Hz 1.5 mm 40 Hz～2000 Hz 5 G (1 cycle = 20 min) × 12 cycle × 3 direction.
3	High temperature storage	*3	±5	+125 °C × 1 000 h
4	Low temperature storage	*3	±3	-40 °C × 1 000 h
5	Temperature cycle	*3	±3	-40 °C ↔ +125 °C 30 minutes at each temp. 1000 cycle
6	Temperature humidity storage	*3	±3	+85 °C × 85 %RH × 1 000 h
7	Resistance to soldering heat		±3	For convention reflow soldering furnace (3times)
8	Substrate bending	No peeling-off at a soldered part		Bend width reaches 2 mm and hold for 60 s ±1 s × 1 time Ref. IEC 60068-2-21
9	Shear	No peeling-off at a soldered part		10 N press for 10 s ±1 s Ref. IEC 60068-2-21
10	Pull – off	No peeling-off at a soldered part		10 N press for 10 s ±1 s Ref. IEC 60068-2-21
11	Solder ability	Terminals must be 95 % covered With fresh solder.		Dip termination into solder bath at +235 °C ±5 °C for 5 s (Using Rosin Flux)

< Notes >

1. *1 each test done independently.
2. *2 measuring 2 h to 24 h later leaving in room temperature after each test.
3. *3 Measuring 24 h later leaving in room temperature after each test.
    1. Reflow 3 times
    2. Initial value shall be after 24h at room temperature.
4. Shift series resistance at before above tests should be less than ±20 % or less than ±10 Ω.

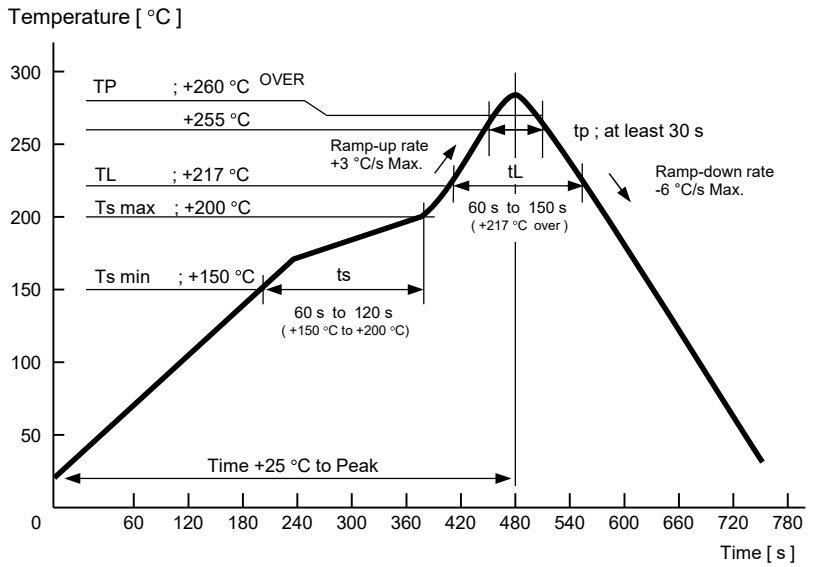

[5] Dimensions and Circuit

1) Dimension (Unit : mm)

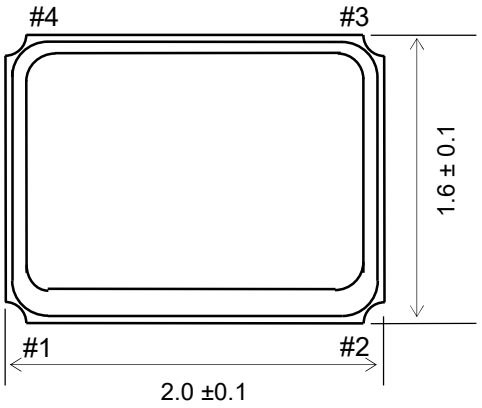

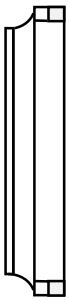

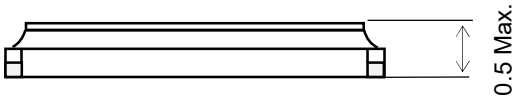

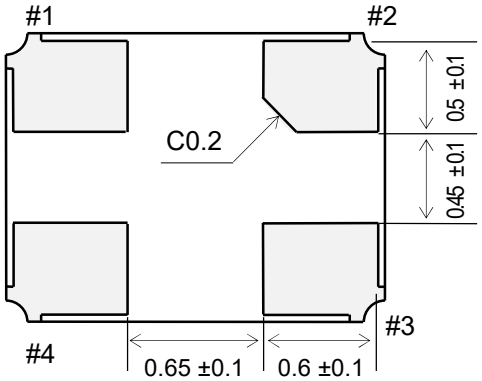

Internal connection

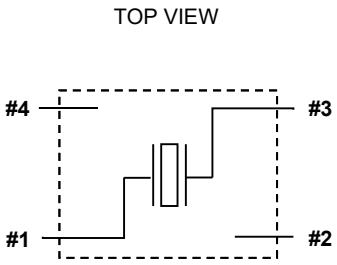

Terminal #2, #4 are connected to the LID
(Please connect GND)
Terminal treatment : Au plate

[6] Recommended soldering pattern and Marking layout

1. Recommended soldering pattern (Unit : mm)

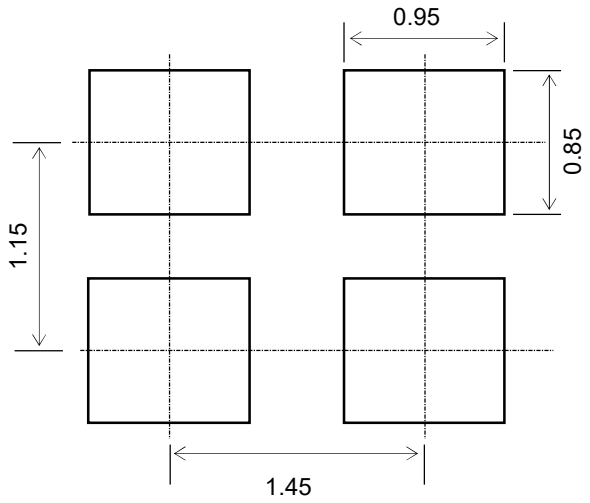

2. Marking layout.

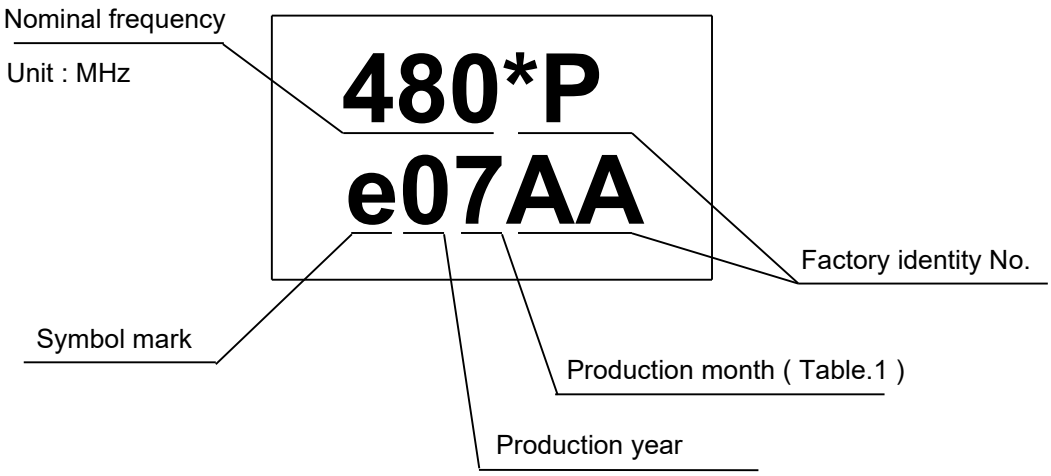

Table.1 Production month

Production Month	Jan.	Feb.	Mar.	・・・	Oct.	Nov.	Dec.
Marking	1	2	3	・・・	X	Y	Z

* Nominal frequency is only one example.
* Nominal frequency is display to the first decimal place.
  ex) 48 MHz ..... [480]
* The above marking layout shows only marking contents and their approximate position and it is not for font, size and exact position.

[7] Notes

1. Max three (3) times re-flow is allowed. Its recommended to manually solder when not enough/no solder detected.(Using soldering iron at +350 °C × within 5 seconds)

2. Patterning on a board should follow our company recommended pattern.

3. Applying excessive excitation force to the crystal unit may cause deterioration damage.

4. Start up time of oscillation may be increased or no oscillation may occur unless adequate negative resistance is allocated in the oscillation circuit In order to avoid this, please provide enough negative resistance to the circuit design.

   How to check the negative resistance

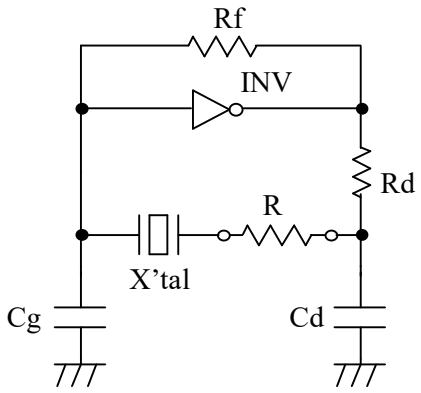

(1) Connect the resister(R) to the circuit in series with the crystal unit.

(2) Adjust R so that oscillation can start (or stop).

(3) Measure R when oscillation just start (or stop) in above (2).

(4) Get the negative resistance
-R=R+CI value.

(5) Recommended -R
[-R]>CI × 10

5. It is recommended to do patterning to the oscillator as short as possible. Abnormal oscillation may happened if the line is too long.

6. To avoid malfunction, no pattern across or near the crystal unit is allowed.

7. Few data or readings taken at user side may be different from our company's data. Confirmation of the different value is necessary before application.

8. Too much exciting shock or vibration may cause deterioration on damage.
   The product may damage depends on the condition such as a shock in assembly machinery.
   Please check your process condition in advance to minimize and maintain the shock level.

9. This product may be affected to ultrasonic cleaning. It is depends on the cleaning conditions (Cleaning machine type/power/time/content/position etc.). The warranty will not cover any damage due to this type of usage. Check conditions prior to use.

10. Condensation may occur when used/stored under high humidity condition.
    Please take precautions to prevent condensation.

11. Please refer to packing specification for the storage method and packing standard.

TAPING SPECIFICATION
テープ梱包基準書

1. APPLICATION 適用範囲

This document is applicable to FA2016AA
本基準書は、FA2016AA のテーピング梱包について規定する。

2. CONTENTS 目次

Item No.	Item	Page
[1]	**Taping specification** テーピング仕様	2 to 3
[2]	**Shipping carton** 外装箱への収納	4
[3]	**Marking** 表示	
[4]	**Quantity** 収納数量	5
[5]	**Storage environment** 保管環境	
[6]	**Handling** リール取扱い	

[1] Taping specification テーピング仕様

Subject to EIA-481 , IEC 60286 , JIS C0806.
「EIA-481」「IEC 60286」「JIS C0806」に準拠する。

(1) Tape dimensions TE0804L

Material of the Carrier Tape キャリアテープ材質: PS
Material of the Top Tape トップテープ材質 : PET+PE

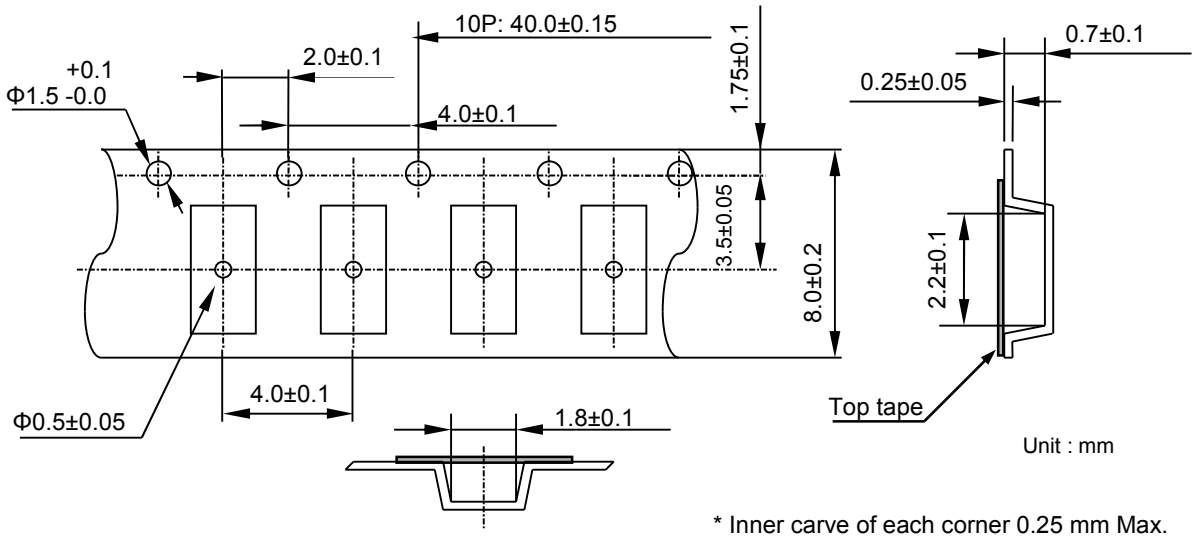

Unit : mm

* Inner carve of each corner 0.25 mm Max.
各コーナーの内 R は 0.25 Max.
*各コーナーの抜きテーパーは 3°Max.

(2) Reel dimensions

Material of the Reel リール材質: PS

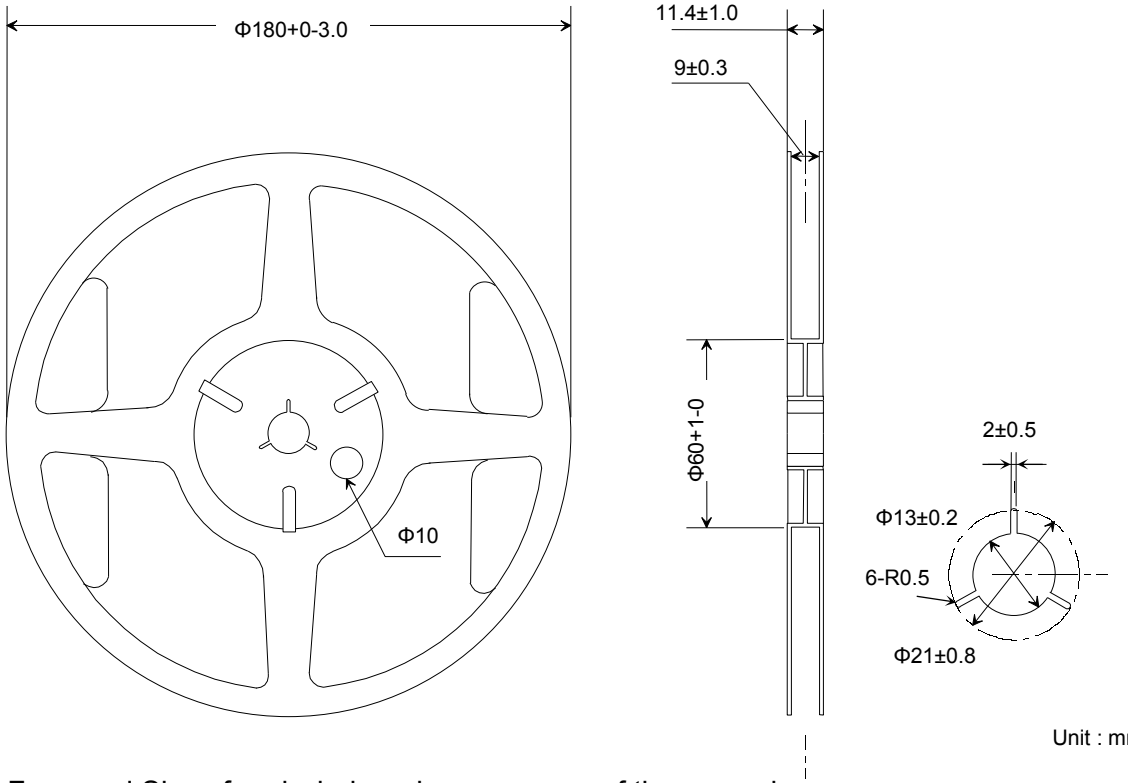

Unit : mm

Form and Size of reel window shows are one of the example
リールの窓の形状は代表例を掲載。

(3) Packing 収納形態

(a) Tape & Reel デバイス収納方法

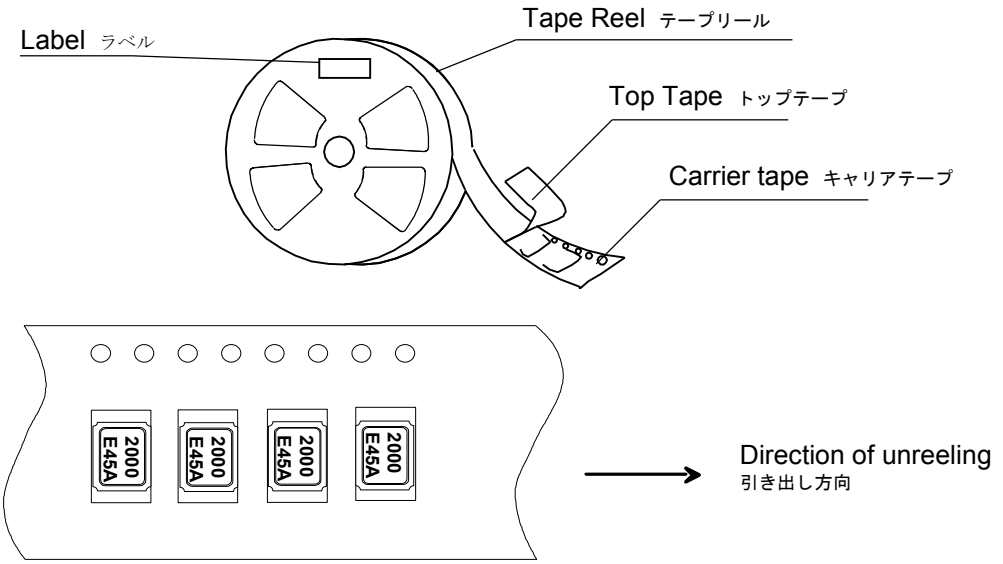

(b) Start & End Point 引き出し先頭側及びリール側の処理

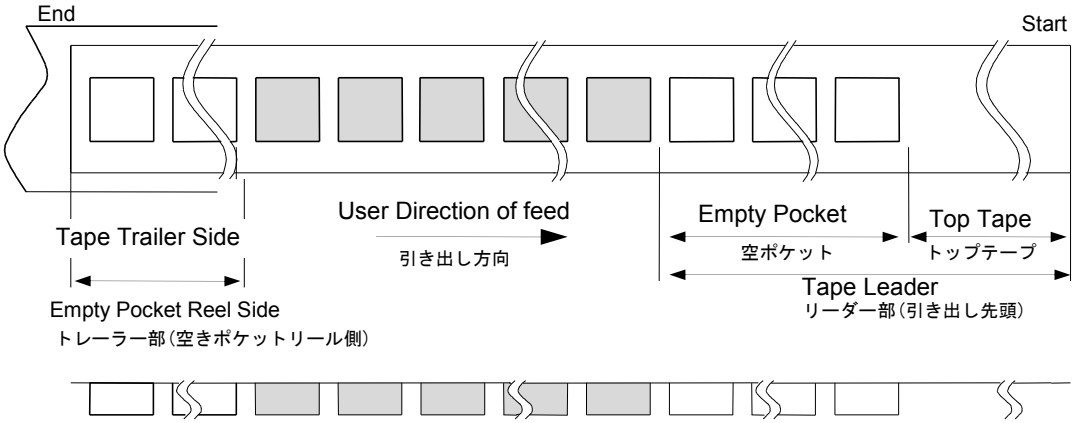

Item 項目		Empty Space 空きスペース	Note 備考
Tape Leader (引き出し先頭側)	Top Tape	Min. 1 000 mm	Feeding in the Top tape, the tip is fixed with tape. トップテープ単独で繰り出し、先端はテープにより固定。
	Carrier Tape	Min. 100 mm	Winding method is a diagram of the above リールへの巻き取り方法は、上図の通り。
Tape Trailer (リール側)	Top Tape	Min. 0 mm	Tip is fixed to the reel. 先端はリールに固定。
	Carrier Tape	Min. 160 mm	

(4) Peel force of the cover tape トップテープの剥離強度

(a) angle : cover tape during peel off and the direction of unreeling shall be 165° to 180°.
剥離角度：テープの接着面に対し 165～180 度とする。

(b) peel speed : 300 mm/min
剥離速度：300 mm/min とする。

(c) peel strength : 0.1～1.0 N
剥離強度:0.1～1.0 N

[2] Shipping carton 外装箱への収納

a) Packing to antistatic bag 袋への収納

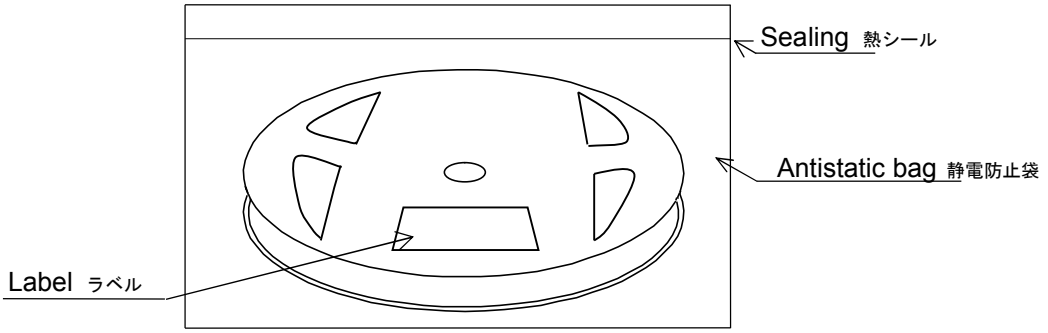

b) Packing to shipping carton 外装箱への収納

If there is space in the outer box, material is put in a shock absorbing together.
空間ができた時は、クッション材を入れる。

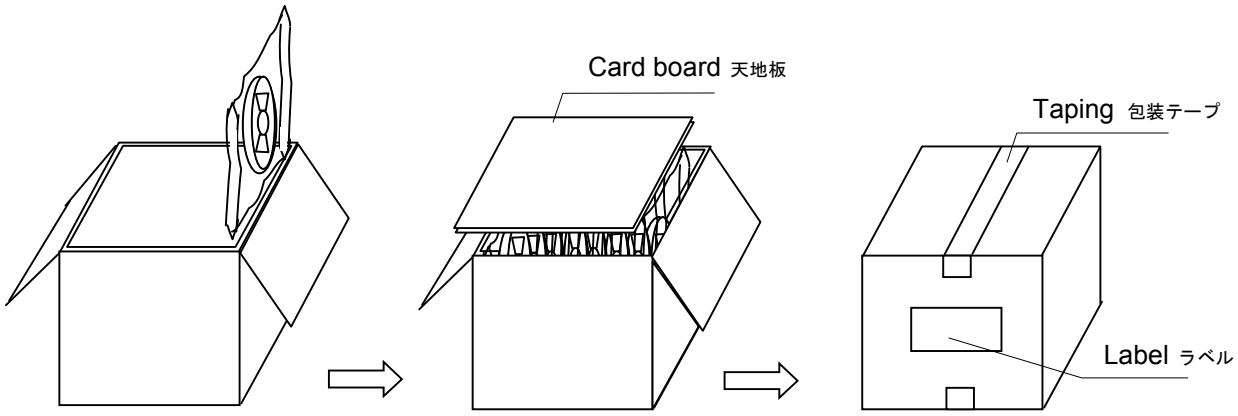

[3] Marking 表示

(1) Reel marking リールへの表示

- Reel marking shall consist of

下記内容をリール表面に表示できるラベルを貼る。:

1) Parts name 製品名称
2) Quantity 製品数量
3) Manufacturing Date or symbol 製品の製造年月又はこれを示す記号
4) Manufacturer's name or symbol 製品の製造業者又はその略号
5) Others (if necessary) その他必要事項

(2) Shipping carton marking 外装箱への表示

- Shipping carton marking shall consist of :

下記内容を外装箱表面に表示できるラベルを貼る。:

1) Parts name 製品名称
2) Quantity 製品数量

[4] Quantity 収納数量

- 3 000 pcs./reel (Standard)

  However it is not the limit, in case that the order quantity does not fill with 3000 pieces.
  Packing quantity is defined by 14th and 15th digit of product number.
  但し、注文数量が 3 000 pcs に満たない場合は、その限りではない。
  収納数量は、製品型番の 14 桁、15 桁による。

14th and 15th digit of product number. 製品型番の 14 桁、15 桁	Quantity
00	3 000 pcs
01	Vinyl Bag(Bulk)
11	Any Quantity
12	250 pcs
14	1 000 pcs
18	5 000 pcs

[5] Storage environment 保管環境

(1) Before open the packing, we recommend to keep less than +30 °C and 85 %RH of Humidity, and to use it less than 6 months after delivery.
開梱前の製品は、温度 +30 °C、湿度 85 %RH 以下での保管をして下さい。
貴社納入後、袋未開封で 6 ヶ月以内の実装を推奨します。

(2) We recommend to open Package in immediately before use. After open Package, We recommend to keeps less than 6 month. No need dry air before soldering work if it is less than temperature +30 °C, 85 humidity %RH.
使用直前まで開梱せず、袋開封後は 6 ヶ月以内の実装を推奨します。
温度 +30 °C、湿度 85 %RH 以下では、はんだ付け作業前に乾燥不要です。

(3) Not to storage with some erosive chemicals.
化学薬品類との同居を避ける。

(4) Nothing is allowed to put on the reel or carton to prevent mechanical damage
外装箱がゆがまないようまた、外圧がかからないように保管して下さい。

[6] Handling リール取扱い

To handle with care to prevent the damage of tape, reel and products.
リールの取扱いについては、中のテープ・製品を変形させないようにして下さい。

Structure Diagram 構造図	Rev.3
Model 型式	**FA2016AA**
Document No. 管理№	FA2016AA_D_0001

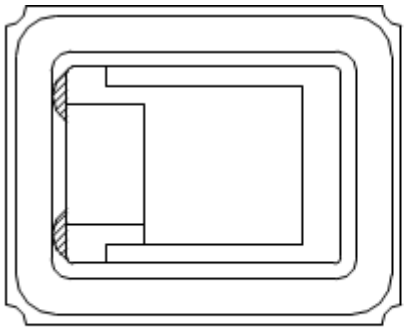

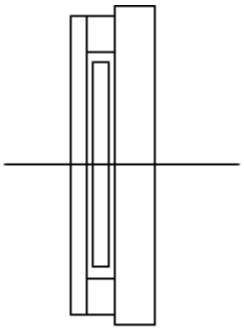

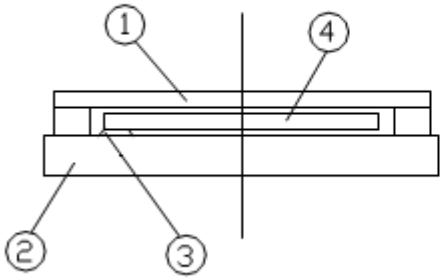

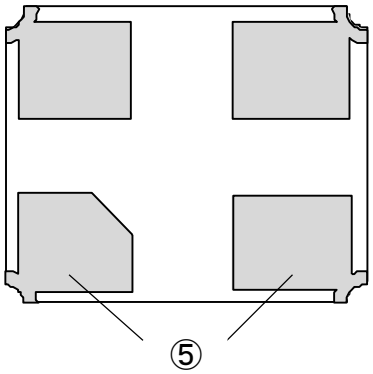

No.	Name of Part 部品名
①	Lid ﾘｯﾄﾞ
②	Package ﾊﾟｯｹｰｼﾞ
③	Crystal Adhesive 水晶接着
④	Crystal chip 水晶片
⑤	Terminal 端子