RECIPIENT

SPECIFICATIONS

Product No. : X1G005721000116

MODEL : TG1612SLN 26.000000MHz ECNNNM

SPEC. No. : A20-275-0B

DATE : Aug. 10. 2020

SEIKO EPSON CORPORATION

8548 Naka-minowa
Minowa-machi Kamiina-gun
Nagano-ken
399-4696 Japan

CHECKED H. Kobayashi / TD Products Development Department Manager
Hitoshi Kobayashi

CHECKED H. Kanno / TD Products Development Department Senior Staff
Hideyuki Kanno

CHECKED / TD・CS Quality Assurance Department Manager
Yasushi Hiraizumi

PREPARED Emi Oguchi / TD・CS Quality Assurance Department Senior Staff
Emi Oguchi

Update History

No.	Date	Page	Item	Current	Update
-	Aug.10.2020	New issue			

SPECIFICATIONS

1. Application

This document is applicable to the temperature compensated crystal oscillator (TCXO) that is delivered to **APPLE** from SEIKO EPSON Corp.

This product is compliant with RoHS Directive.

This Product supplied (and any technical information furnished, if any) by SEIKO EPSON Corporation shall not be used for the development and manufacture of weapon of mass destruction or for other military purposes.
Making available such products and technology to any third party who may use such products or technologies for the said purposes are also prohibited.

This product listed here is designed as components or parts for electronics equipment in general consumer use.
We do not expect that any of these products would be incorporated or otherwise used as a component or part for the equipment, which requires an extra high reliability, such as satellite, rocket and other space systems, and medical equipment, the functional purpose of which is to keep life.

2. Product No. / Model

The product No. of this crystal oscillator unit is **X1G005721000116**.
The model is **TG1612SLN 26.000000 MHz ECNNNM**.

3. Packing

It is subject to the packing standard of SEIKO EPSON Corp.

4. Warranty

Defective parts which are originated by us are replaced free of charge in case defects are found within 12 months after delivery.

5. Amendment and abolishment

Amendment and/or abolishment of this specification are subject to the agreement of both parties.

6. Contents

Item No.	Item	Page
[1]	Characteristics	2
[2]	Absolute maximum ratings	2
[3]	Operating range	2
[4]	Frequency characteristics	3
[5]	Electrical characteristics	3
[6]	Test circuit	4
[7]	Environmental and mechanical characteristics	5
[8]	Dimensions and marking layout	6
[9]	Recommendable patterning	7
[10]	Handling precautions	8,9

[1] Characteristics

- Lead Free Reflowable and ultra small SMD (1.6 × 1.2 × 0.45 mm).
- High stability TCXO.
- Output waveform：Clipped sine wave

[2] Absolute maximum ratings

Parameter	Symbol	Value	Unit	Note
Supply voltage	V_{CC}-GND	-0.3 to +4.0	V	
Storage temperature range	$T_{_STG}$	-40 to +105	°C	Storage as single product

[3] Operating range

Parameter		Symbol	Value			Unit	Note
			Min.	Typ.	Max.		
Supply voltage		V_{CC}	1.7	1.8	1.9	V	V_{CC} = 1.8 V ±0.1 V
		GND	0	-	0	V	
Operating temperature range		T_use	-30	+25	+85	°C	
Output load		Load_R	9	10	11	kΩ	
		Load_C	9	10	11	pF	
	DC-cut capacitor *	C_C	0.01	-	-	µF	

* DC-cut capacitor is not included in this TCXO. Please attach an external DC-cut capacitor to the out pin.

[4] Frequency characteristics

1) Output frequency 26.000000 MHz
2) Frequency characteristics

(Condition : V_{CC} = 1.8 V, GND = 0.0 V, Load 10 kΩ // 10 pF, T_use = +25 °C)

Parameter	Symbol	Value			Unit	Note
		Min.		Max.		
Frequency tolerance	f_tol	-1.0	-	+1.0	$\times 10^{-6}$	T_use = +25 °C ±2 °C Before Reflow
	f_tol *1	-2.0	-	+2.0	$\times 10^{-6}$	T_use = +25 °C ±2 °C After 2 reflows *2
Frequency / Temperature characteristics	fo-Tc	-0.5	-	+0.5	$\times 10^{-6}$	T_use = -30 °C to +85 °C (Reference to +25 °C)
Frequency slope	-	-0.1	-	+0.1	$\times 10^{-6}$ / °C	T_use = -30 °C to +85 °C
Hysteresis	-	-0.6	-	+0.6	$\times 10^{-6}$	Measured at 25 dec.C. TCXO cycled from 25 deg. C to -30 deg. C to 85 deg.C back to 25 deg. C
Frequency / Load coefficient	fo-Load	-0.2	-	+0.2	$\times 10^{-6}$	Load : ±10 %
Frequency / Voltage coefficient	fo-V_{CC}	-0.2	-	+0.2	$\times 10^{-6}$	V_{CC} : 5 % *3
Frequency aging	f_age	-1.0	-	+1.0	$\times 10^{-6}$	First year T_use = +25 °C
Acceleration sensitivity	-	-	-	3	$\times 10^{-9}$ / g	3 axes, 30 - 500 Hz

*1 Include initial frequency tolerance and frequency deviation after reflow cycles.
*2 Measured in the elapse of 24 hours after reflow soldering.
*3 Vcc ±0.1 V must be in operating supply voltage range (1.7 V to 1.9 V)

[5] Electrical characteristics

(Condition : V_{CC} = 1.8 V, GND = 0.0 V, Load 10 kΩ // 10 pF, T_use = +25 °C)

Parameter	Symbol	Value			Value	Note
		Min.	Typ.	Max.		
Current consumption	Icc	-	-	1.5	mA	T_use = -30 °C to +85 °C
Output level	Vpp	0.8	-	1.5	V	Peak to peak voltage
Symmetry	SYM	40	50	60	%	GND Level (DC-cut)
Start up time	t_str	-	-	2.0	ms	Until frequency has been reached within $\pm 0.5 \times 10^{-6}$ of final frequency.
		-	-	2.0	ms	Until output signal has been reached min 90 % of final amp.
Harmonics	-	-	-	-10.0	dBc	
SSB Phase noise	L(f)	-	-61	-	dBc/Hz	Offset : 1 Hz
		-	-90	-		Offset : 10 Hz
		-	-116	-		Offset : 100 Hz
		-	-138	-		Offset : 1 kHz
		-	-153	-		Offset : 10 kHz
		-	-157	-		Offset : 100 kHz
		-	-157	-		Offset : 1 MHz
Root Allan Variance		-	-	1.0	$\times 10^{-9}$	τ = 1 sec

[6] Test circuit

1) Output Load : Load_R // Load_C = 10 kΩ // 10 pF

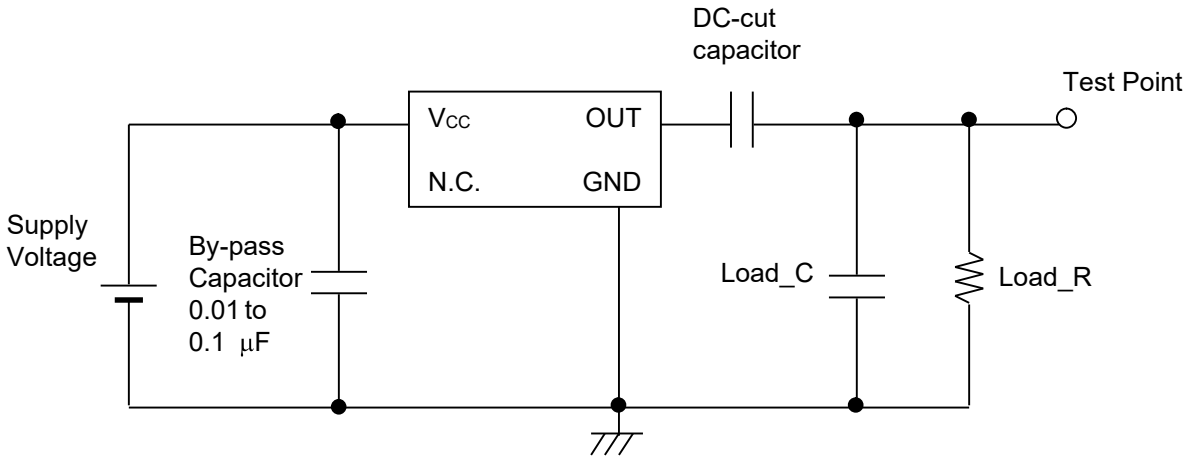

2) Current consumption

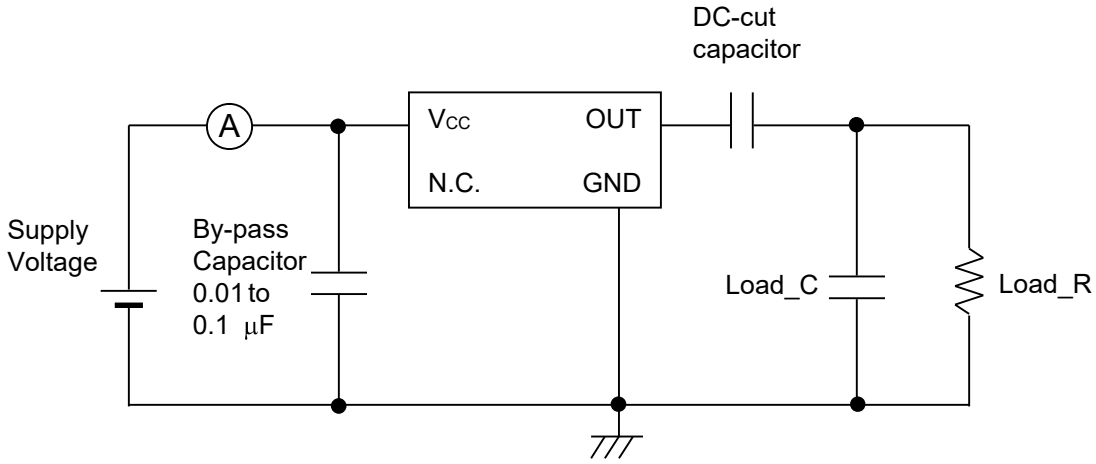

3) Conditions

1. Oscilloscope: Impedance Min. 1 MΩ
   Input capacitance Max. 10 pF
   Band width Min. 300 MHz
   Impossible to measure both frequency and wave form at the same time.(In case of using oscilloscope's amplifier output, possible to measure both at the same time.)
2. Load_C includes probe capacitance.
3. A capacitor (By-pass:0.01 to 0.1 μF) is placed between V_{CC} and GND, and closely to TCXO.
4. Use the current meter whose internal impedance value is small.
5. Power Supply
   Impedance of power supply should be as low as possible.
6. GND pin should be connected to low impedance GND.

[7] Environmental and mechanical characteristics

(The company evaluation condition. we evaluate it by the following examination item and examination condition.)

No.	Item	Value *1 Freq. Tolerance [1×10^{-6}] *2 Electrical characteristics	Test method
1	High temp. storage *3	±2.0	+105 °C × 1000 h
2	Low temp. storage *3	±2.0	-40 °C × 1000 h
3	High temp. with humidity	±2.0	+85 °C × 85 %RH × 1000 h
4	Temp. cycle *3	±2.0	-40 °C to +125 °C 30 min at each temp. 100 cycles
5	Resistance to Soldering heat	±1.0	Reflow furnace with the condition 3 times Follow JEDEC J-STD-020D.1
6	Shock	±1.0	150 g dummy Jig (Seiko Epson Standard) drop from 1500 mm height on the Concrete 6 directions 3 times.
7	Vibration	±1.0	10 Hz to 55 Hz amplitude 0.75 mm 55 Hz to 500 Hz acceleration 98 m/s^2 10 Hz → 500 Hz → 10 Hz 15 min / cycle 6 h (2 h × 3 directions)
8	Solderability	Terminals must be 95 % covered with fresh solder	Dip termination into solder bath at +235 °C ±5 °C for 5 s (Using Rosin Flux)

< Notes >

1.*1 Each test done independently.

2.*2 Measuring 2 h to 24 h later leaving in room temperature after each test.

3.*3 Initial value shall be measured after 24 h storage at room temperature Pre-treatment

Pre-treatment : Bake (+125 °C × 24 h) → Moisture soak (+85 °C × 85 % × 168 h) → reflow (3 times)

Convection reflow condition (follow to IPC / JEDEC J-STD-020D.1)

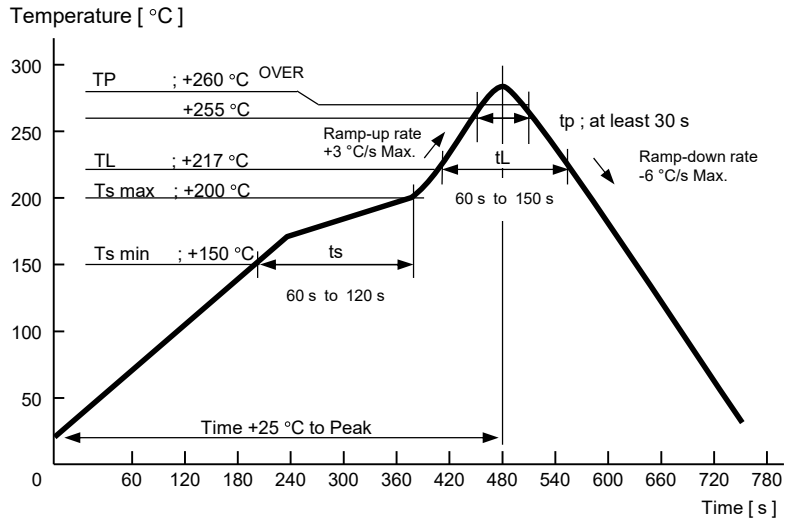

[8] Dimensions and marking layout

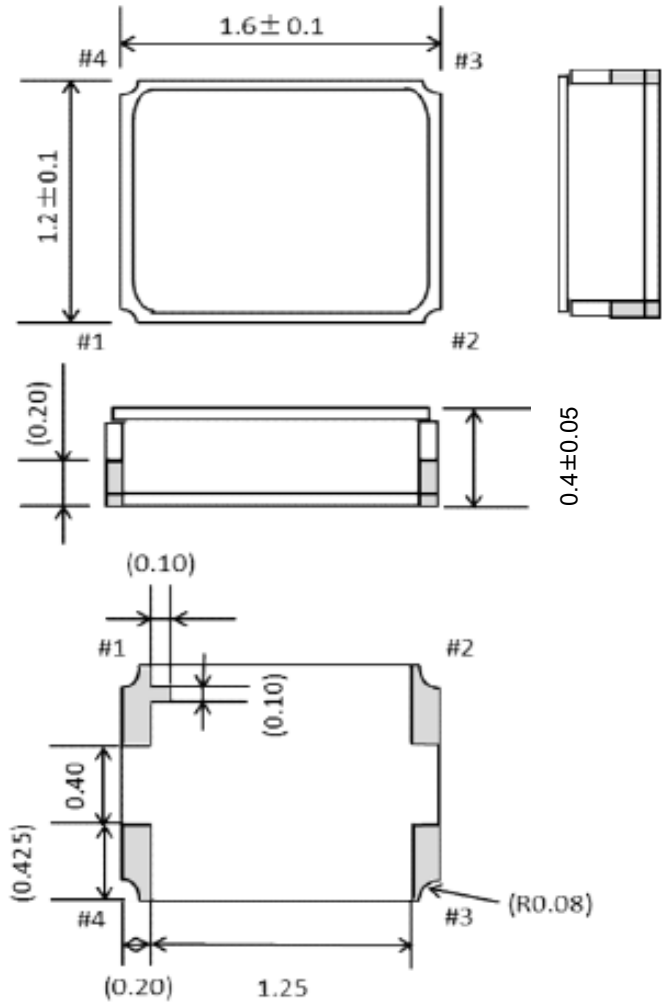

(Unit : mm)

Marking

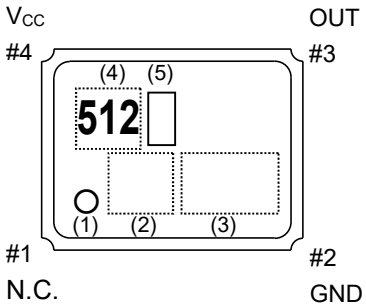

(1) 1Pin Mark
(2) Arbitrary marking area (2digits)
(3) TCXO LOT NO. (3digits)
(4) TCXO Model ID (512)
(5) Image recognition mark

Connection

Pin No.	Terminal
#1	N.C.
#2	GND
#3	OUT
#4	V_{CC}

Material

Base : Ceramics
Terminal : Au plated nickel

Please keep “N.C.” pin OPEN condition or GND connection.
"N.C." pin doesn’t work as a ground pin.

[9] Recommendable patterning

For actual design work, please consider optimum condition together with mounting density, reliability of soldering and mount ability etc.

For stable operation, please add a bypass capacitor (0.01 uF to 0.1 uF) between Vcc and GND.
Please place it as close to TCXO as possible.

Soldering position

(Unit : mm)

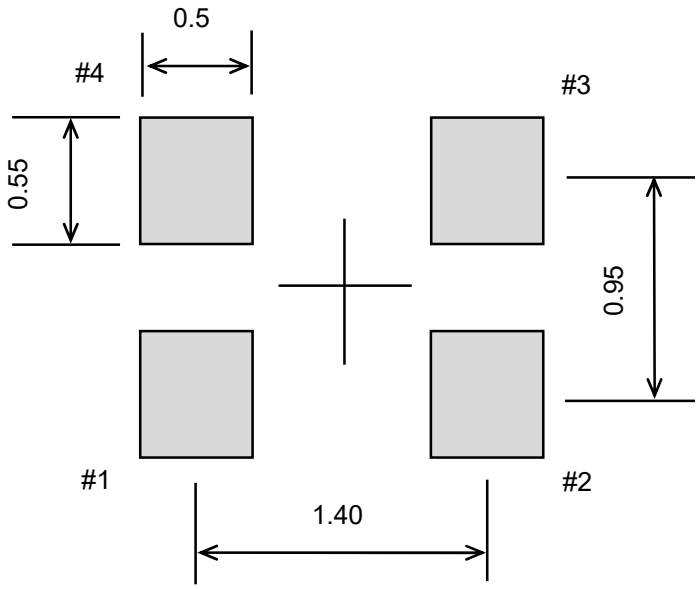

[10] Handling precautions

Prior to using this product, please carefully read the section entitled “Precautions” on our Web site (https://www5.epsondevice.com/en/information/#precaution) for instructions on how to handle and use the product properly to ensure optimal performance of the product in your equipment. Before using the product under any conditions other than those specified therein, please consult with us to verify and confirm that the performance of the product will not be negatively affected by use under such conditions.

In addition to the foregoing precautions, in order to avoid the deteriorating performance of the product, we strongly recommend that you DO NOT use the product under ANY of the following conditions:

(1) Do not expose this product to excessive mechanical shock or vibration.

(2) This product can be damaged by mechancial shock during the soldering process depending on the equipment used, process conditions, and any impact forces experienced. Always follow appropriate procedures, particularly when changing the assembly process in anyway and be sure to follow applicable process qualification standards before starting production.

(3) These devices are sensitive to ESD, please use appropriate precautions during handling, assembly, test, shipment, and installation.

(4) This product contains semiconductor content that should not be exposed to electromagnetic waves.

(5) The use of ultrasonic technology for cleaning, bonding, etc. can damage the Xtal unit inside this product. Please carefully check for this consideration before using ultrasonic equipment for volume production with this product.

(6) Noise and ripple on the power supply may have undesirable affects on operation and cause degradation of phase noise characteristics. Evaluate the operation of this device with appropriate power supplies carefully before use.

(7) When applying power, ensure that the supply voltage increases monotonically for proper operation. On power doen, do not reapply power until the supplies, bypass capacitors, and any bulk capacitors are completely discharged since that may cause the unit to malfunction.

(8) Aging specifications are estimated from environmental reliability tests and expected frequency variation over time. They do not provide a guarantee of aging over the product lifecycle.

(9) The metal cap on top of the device is directly connected to the GND terminal (pin #2). Take necessary precautions to prevent any conductor not at ground potential from contacting the cap as that could cause a short circuit to GND.

(10) Do not route any signal lines, supply voltage lines, or GND lines underneath the area where the oscillators are mounted including any internal layers and on the opposite side of the PCB.
To avoid any issues due to interference of other signal lines, please take care not to place signal lines near the product as this may have an adverse affect on the performance of the product.

(11) A bypass capacitor of the recommended value(s) must be connected between the Vcc and GND terminals of the product. Whenever possible, mount the capacitor(s) on the same side of the PCB and as close to the product as possible to keep the routing traces short.

(12) Power supply connections to Vcc and GND pins should be routed as thick as possible whle keeping the high frequency impedance low in order to get the best performance.

(13) The use of a filter or similar element in series with the power supply connections to protect from electromagnetic radiation noise may increase the high frequency impedance of the power supply line and may cause the oscillator to not operate properly. Please verify the design to ensure sufficient operational margin prior to use.

(14) Keep PCB routing from the output terminal(s) to the load as short as possible for best performance.

(15) Do not short the output to GND as that will damage the product. Always use with an appropriate load resistor connected.

(16) Product failures during the warranty period only apply when the product is used according to the recommended operating conditions described in the specifications. Products that have been opened for analysis or damaged will not be covered. It is recommended to store and use in normal temperature and humidity environments described in the specifications to ensure frequency accuracy and prevent moisture condensation. If the product is stored for more than one year, please confirm the pin solderability prior to use.

(17) If the oscillation circuit is exposed to condensation, the frequency may change or oscillation may stop. Do not use in any conditions where condensation occurs.

(18) Do not store or use the product in an environment where it can be exposed to chemical substances that are corrosive to metal or plastics such as salt water, organic solvents, chemical gasses, etc. Do not use the product when it is exposed to sunlight, dust, corrosive gasses, or other materials for long periods of time.

(19) When using water-soluble solder flux make sure to completely remove the flux residue after soldering. Pay particular attention when the residues contain active halogens which will negatively affect the product and its performance.

(20) This product uses AuSn brazing material as the braze sealing material, due to this reflow soldering mounting is recommended. When removing the product from the PCB avoid excess heating of the sealing as excess heating to AuSn melting point (+278degC) may deteriorate the characteristics of the device or reduce the hermetic sealing when soldering iron or an air desoldering tool is used so use care to not expose the seal directly to the heat sources.

Should any customer use the product in any manner contrary to the precautions and/or advice herein, such use shall be done at the customer’s own risk.

TAPING SPECIFICATION
テープ梱包基準書

1. APPLICATION 適用範囲

This document is applicable to 1.6 x 1.2 SMD package.
本基準書は、1.6 x 1.2 セラミックパッケージのテーピング梱包について規定する。

2. CONTENTS 目次

Item No.	Item	Page
[1]	**Taping specification** テーピング仕様	2 to 3
[2]	**Shipping carton** 外装箱への収納	4
[3]	**Marking** 表示	
[4]	**Quantity** 収納数量	5
[5]	**Storage environment** 保管環境	
[6]	**Handling** リール取扱い	

[1] Taping specification テーピング仕様

Subject to EIA-481 , IEC 60286.
「EIA-481」「IEC 60286」に準拠する。

(1) Tape dimensions TE0804L

Material of the Carrier Tape キャリアテープ材質 : PS (Black / Conductive 黒/導電性)
Material of the Top Tape トップテープ材質 : PET+PE

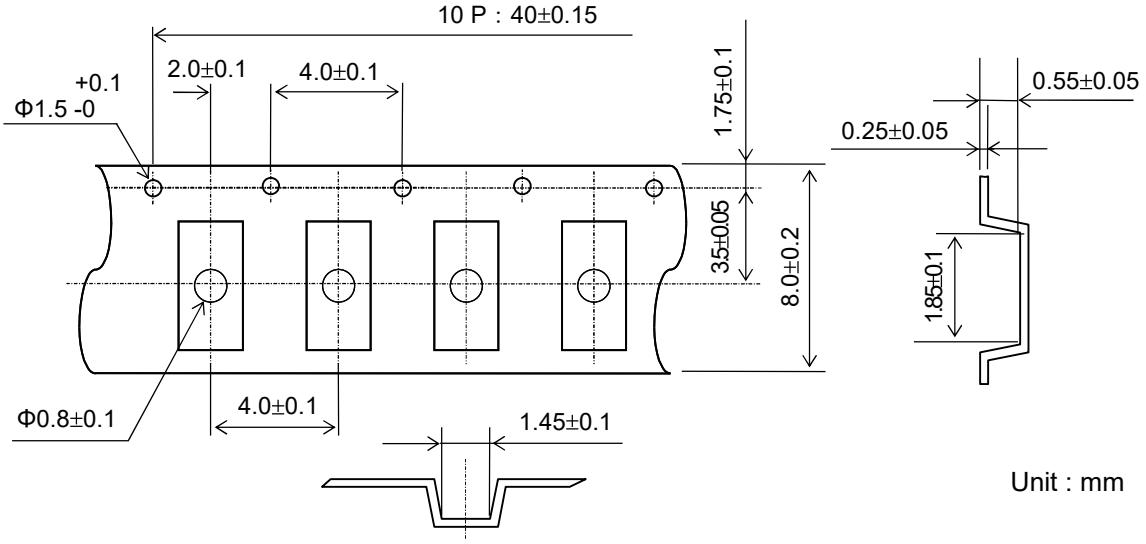

Unit : mm

(2) Reel dimensions

Material of the Reel リール材質: PS (Black / Conductive 黒/導電性)

Form and Size of reel window shows are one of the example
リールの窓の形状は代表例を掲載。

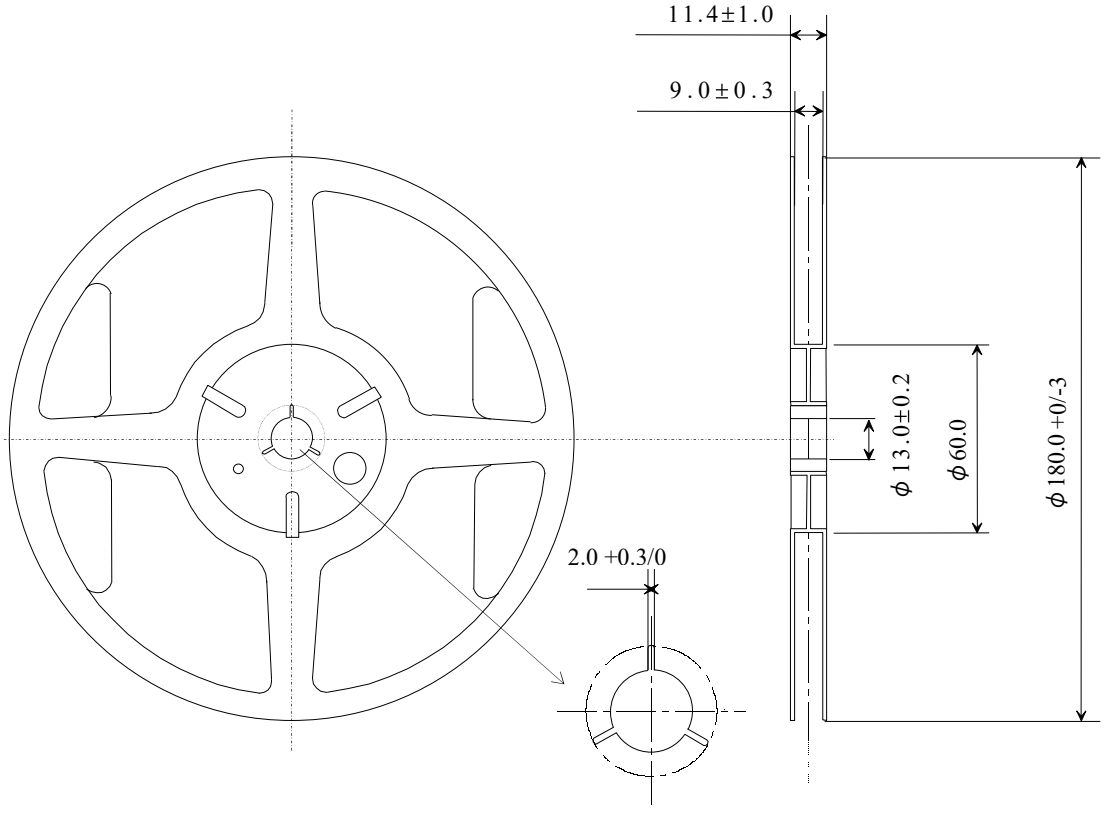

(3) Packing 収納形態

(a) Tape & Reel デバイス収納方法

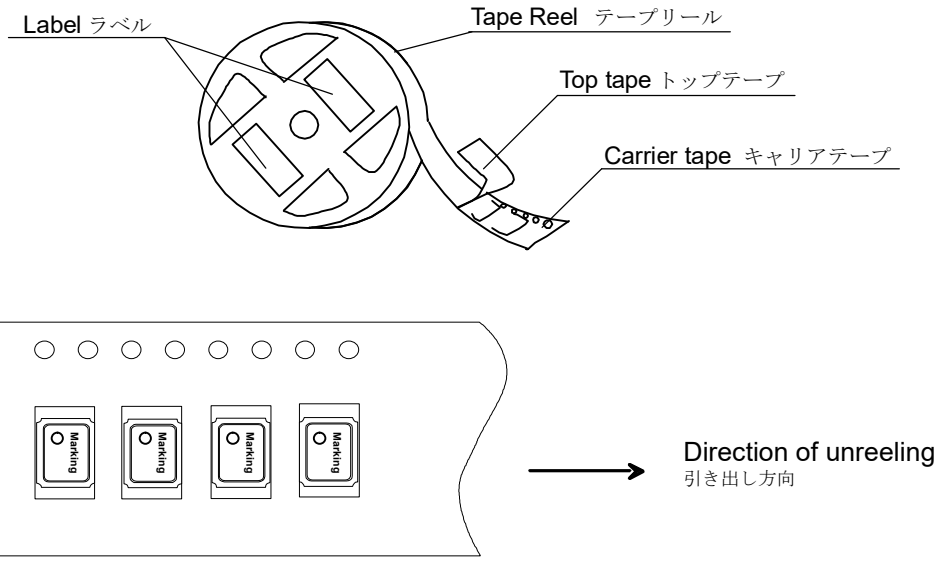

(b) Start & End Point 引き出し先頭側及びリール側の処理

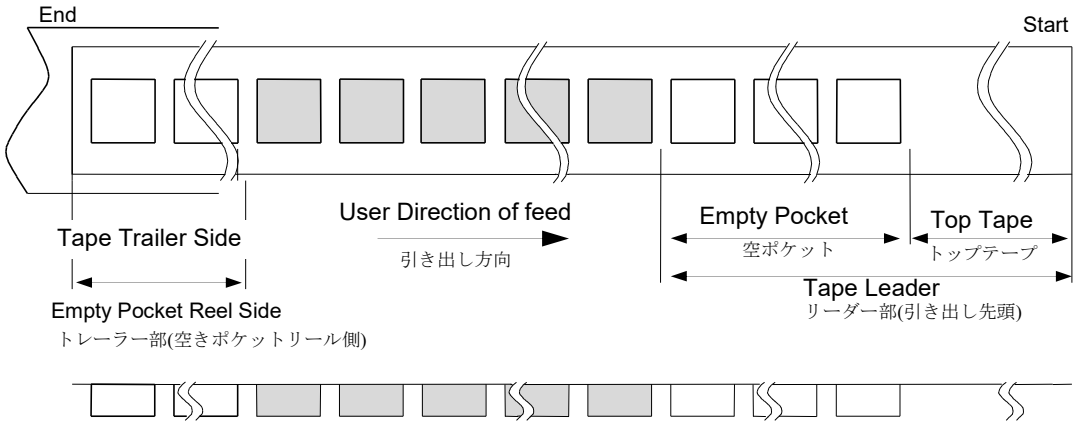

Item 項目		Empty Space 空きスペース	Note 備考
Tape Leader (引き出し先頭側)	Top Tape	Min. 200 mm	Feeding in the Top tape, the tip is fixed with tape. トップテープ単独で繰り出し、先端はテープにより固定。
	Carrier Tape	Min. 150 mm	Winding method is a diagram of the above リールへの巻き取り方法は、上図の通り。
Tape Trailer (リール側)	Top Tape	Min. 0 mm	Tip is fixed to the reel. 先端はリールに固定。
	Carrier Tape	Min. 150 mm	

(4) Peel force of the cover tape トップテープの剥離強度

(a) Angle: cover tape during peel off and the direction of unreeling shall be 165° to 180°.
剥離角度:テープの接着面に対し 165～180 度とする。

(b) Peel speed: 300 mm/min.
剥離速度:300 mm/min とする。

(c) Peel strength: 0.1 ~ 1.0 N.
剥離強度:0.1～1.0 N

[2] **Shipping carton** 外装箱への収納

a) Packing to antistatic bag 袋への収納

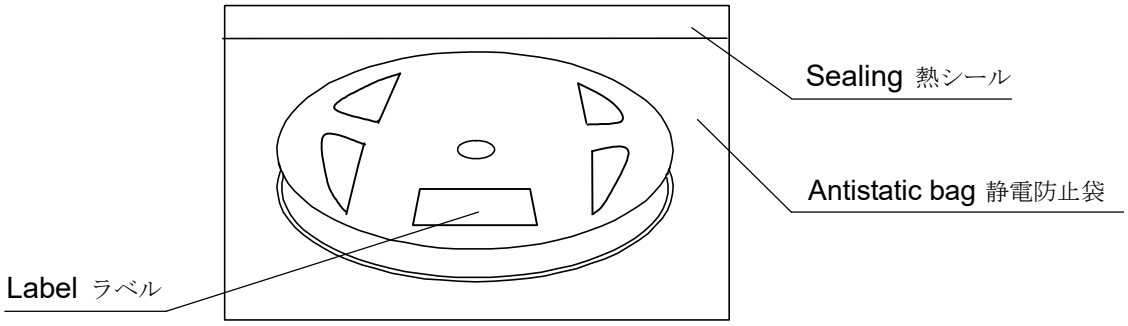

b) Packing to shipping carton 外装箱への収納

If there is space in the outer box, material is put in a shock absorbing together.
空間ができた時は、クッション材を入れる。

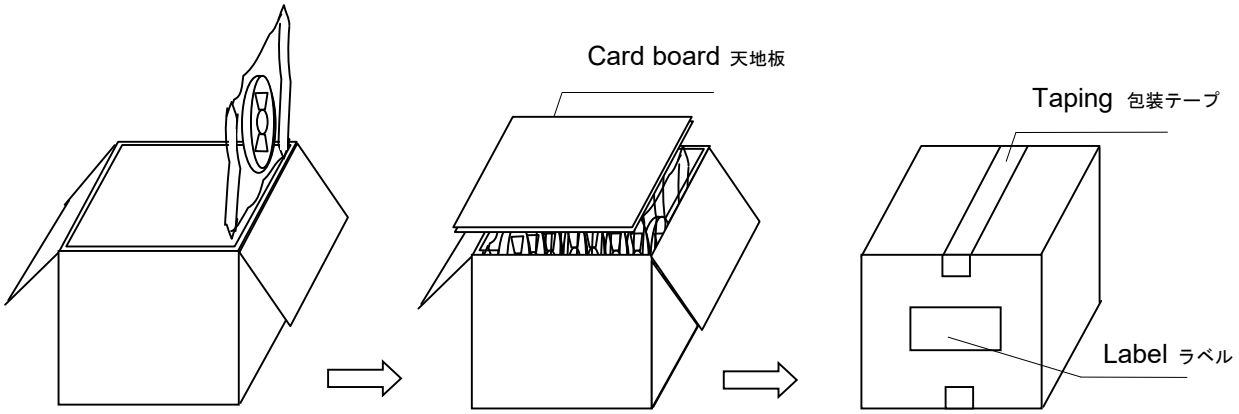

[3] Marking 表示

(1) Reel marking リールへの表示

- Reel marking shall consist of

下記内容をリール表面に表示できるラベルを貼る。:

1) Parts name 製品名称
2) Quantity 製品数量
3) Manufacturing Date or symbol 製品の製造年月又はこれを示す記号
4) Manufacturer's Date or symbol 製品の製造業者又はその略号
5) Others (if necessary) その他必要事項

(2) Shipping carton marking 外装箱への表示

- Shipping carton marking shall consist of :

下記内容を外装箱表面に表示できるラベルを貼る。:

1) Parts name 製品名称
2) Quantity 製品数量

[4] Quantity 収納数量

- 3 000 pcs./reel (Standard)

  However it is not the limit, in case that the order quantity does not fill with 3 000 pieces.
  Packing quantity is defined by 14th and 15th digit of product number.
  但し、注文数量が 3 000 pcs に満たない場合は、その限りではない。
  収納数量は、製品型番の 14 桁、15 桁による。

14th and 15th digit of product number. 製品型番の 14 桁、15 桁	Quantity
01	Vinyl Bag(Bulk)
11	Any Quantity
16	3 000 pcs

[5] Storage environment 保管環境

(1) Before open the packing, we recommend to keep less than +30 °C and 60 %RH of Humidity, and to use it less than 6 months after delivery.
開梱前の製品は、温度 +30 °C、湿度 60 %RH 以下での保管をして下さい。
貴社納入後、袋未開封で 6 ヶ月以内の実装を推奨します。

(2) We recommend to open Package in immediately before use. After open Package, We recommend to keeps less than 6 month. No need dry air before soldering work if it is less than temperature +30 °C, 85 humidity %RH.
使用直前まで開梱せず、袋開封後は 6 ヶ月以内の実装を推奨します。
温度 +30 °C、湿度 85 %RH 以下では、はんだ付け作業前に乾燥不要です。

(3) Not to storage with some erosive chemicals.
化学薬品類との同居を避ける。

(4) Nothing is allowed to put on the reel or carton to prevent mechanical damage.
内・外装箱がゆがまないようまた、外圧がかからないように保管して下さい。

[6] Handling リール取扱い

To handle with care to prevent the damage of tape, reel and products.
リールの取扱いについては、中のテープ・製品を変形させないようにして下さい。

- PROCESS QUALITY CONTROL -

No. TG1612SLN-00-ATE-2

CRYSTAL OSCILLATOR TG1612SLN

TG1612SLN_Q_0001
2020.3.26

Manufacturing process chart

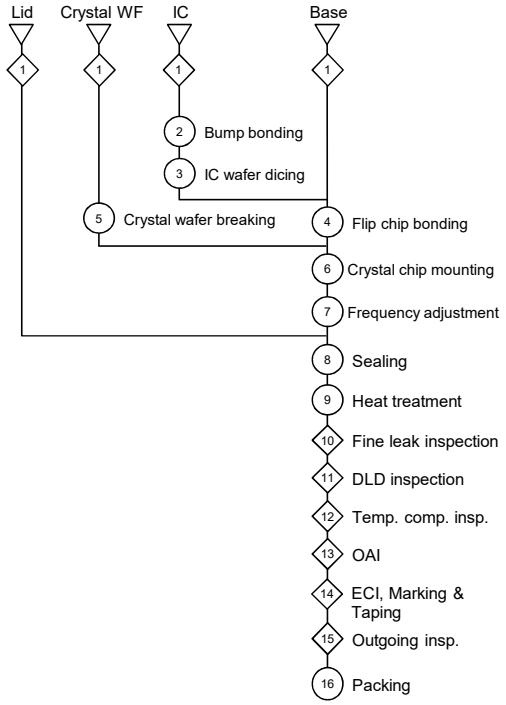

	Section In Charge	Standards	Inspection Control Item	Instruments	Inspection Methods	Record
1	Inspection Section	Purchasing Specification Incoming Inspection Standard	Appearance	Microscope, Visual	Sampling	Data sheet
2	Production Section	Manufacturing Instruction	Ball diameter Shear strength	Tool microscope Shear tester	Sampling Sampling	Data sheet
3	Production Section	Manufacturing Instruction	Dicing position	Machine	Sampling	Data sheet
4	Production Section	Manufacturing Instruction	Bump crush Shear strength	Machine Shear tester	All Sampling	Data sheet
5	Production Section	Manufacturing Instruction	-	-	-	-
6	Production Section	Manufacturing Instruction	Crystal chip mount position Shear strength	Machine Shear tester	All Sampling	Data sheet
7	Production Section	Manufacturing Instruction	Frequency	Counter	All	Data sheet
8	Production Section	Manufacturing Instruction	Appearance	Microscope	Sampling	Data sheet
9	Production Section	Manufacturing Instruction	-	-	-	-
10	Production Section	Manufacturing Instruction	Leakage inspection	Machine	All	Data sheet
11	Production Section	Manufacturing Instruction	DLD characteristic	Machine	All	Data sheet
12	Production Section	Manufacturing Instruction	Frequency temperature characteristic	Machine	All	Data sheet
13	Production Section	Manufacturing Instruction	Appearance	Microscope	All	Data sheet
14	Production Section	Manufacturing Instruction	Electrical characteristic Appearance Tape peel stength	Machine Machine camera Peeling strength tester	All All Sampling	Data sheet
15	Production Section	Delivery Specifications Outgoing Inspection	Electrical characteristic Appearance	Outgoing tester Microscope	Sampling	Data sheet
16	Production Section	Manufacturing Instruction Daily Shipping List	Customers Type/Quantity	-	-	Delivery Ship

Structure Diagram 構造図	Rev.0
Model 型式	TG1612SLN
Document No. 管理 No.	TG1612SLN _D_0001

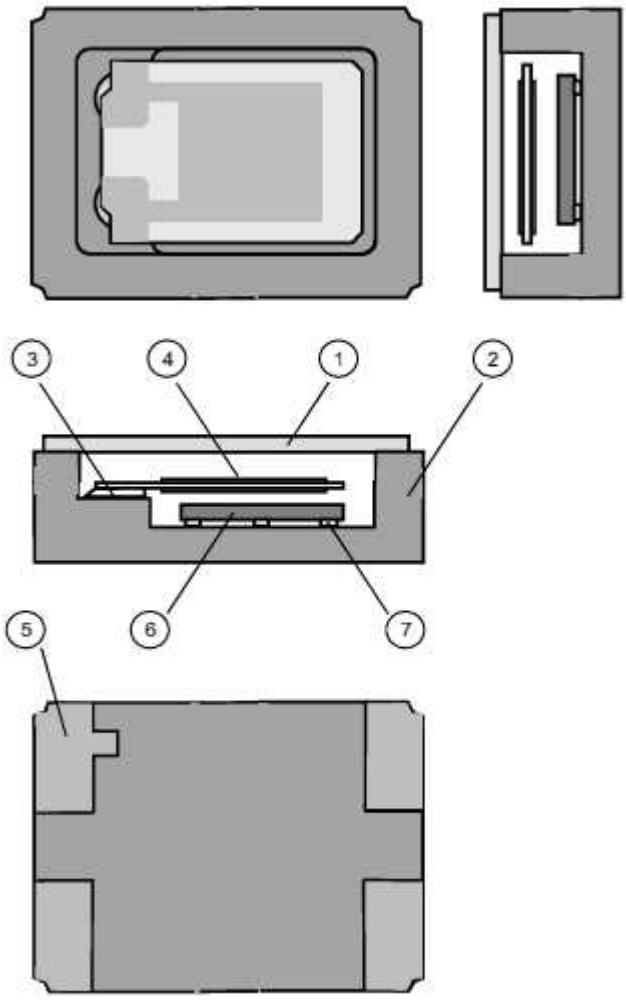

No.	Name of Part 部品名	No.	Name of Part 部品名
①	Lid リッド	⑤	Terminal 端子
②	Package パッケージ	⑥	IC IC
③	Crystal adhesive 接着材	⑦	FC bump FC バンプ
④	Crystal chip 水晶片		

RELIABILITY TEST DATA 信頼性試験結果

Product Name : TG1612SLN

The Company evaluation condition 弊社評価条件

We evaluate environmental and mechanical characteristics by the following test condition .

弊社では環境特性及び機械的特性を下記試験条件により評価しています。

No. ISD-19-1365

No.	ITEM 試験項目	TEST CONDITIONS 条件	VALUE *1 判定規格		TEST Q'ty 試料数 [n]	FAIL Q'ty 故障数 [n]
			Δ f / f *2 周波数変化率 [1 × 10^{-6}]	Electrical characteristics 電気的特性		
1	High temperature storage 高温保存試験	+105 °C × 1 000 h	*3 ± 2	Satisfy specification after test 試験後 電気的特性、周波数 特性を満足すること	22	0
2	Low temperature storage 低温保存試験	-40 °C × 1 000 h	*3 ± 2		22	0
3	Temperature humidity 高温高湿試験	+85 °C × 85 %RH × 1 000 h	*3 ± 2		22	0
4	Temperature cycle 温度サイクル試験	-40 °C ⇔ +125 °C 30 min at each temp. 100 cycles	*3 ± 2		22	0
5	Resistance to soldering heat はんだ耐熱性試験	For convention reflow soldering furnace (3 times) Follow JEDEC J-STD-020D.1	± 1		22	0
6	Shock 衝撃試験	150 g dummy Jig (Seiko Epson Standard) drop from 1500 mm height on the 6 directions 3 times.	± 1		22	0
7	Vibration 振動試験	10 Hz to 55 Hz amplitude 0.75 mm 55 Hz to 500 Hz acceleration 98 m/s^2 10 Hz→500 Hz→10 Hz 15 min / cycle 6 h(2 h × 3 directions)	± 1		22	0
8	Solderability はんだ付け性試験	Dip termination into solder bath at +235 °C ± 5 °C for 5 s (Using Rosin Flux)	Termination must be 95 % covered with fresh solder 浸漬面の 95 % 以上が新しいはんだで覆われること		11	0

Notes <注記>

*1 Each test done independently.
各項目を独立して試験した場合の規格値とする。

*2 Measuring 2 h to 24 h later leaving in room temperature after each test.
各試験終了後、常温放置 2 h ～ 24 h 後に測定した値とする。

*3 Initial value shall be measured after 24 h storage at room temperature Pre-treatment
Pre-treatment : Bake (+125°C × 24 h) → Moisture soak (+85°C× 85 % × 168 h) → reflow (3 times)
試験前に前処理 (乾燥 +125 °C × 24 h → 吸湿 +85 °C × 85 %RH×168 h → ﾘﾌﾛｰ炉3回)を行い、常温放置24 h後の測定値を初期値とする。

Qualification Data

Product Name : TG1612SLN

Frequency Shift Rate Δ f / f

No. ISD-19-1365

1. High temp. storage
+105 ºC × 1 000 h

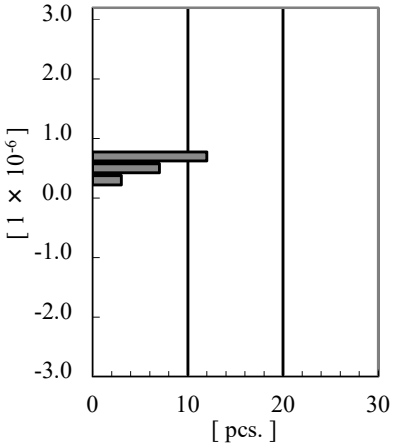

2. Low temp. storage
-40 ºC × 1 000 h

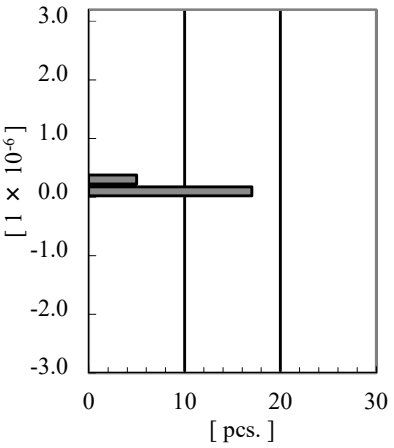

3. Temp. humidity bias
+85 ºC × 85 %RH × 1 000 h

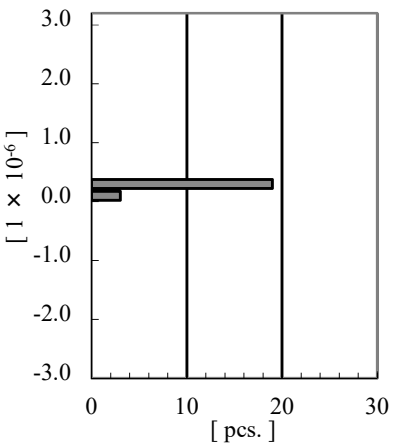

4. Temp. cycle
-40 ºC ⇔ +125 ºC
100 cycles 30 min each step

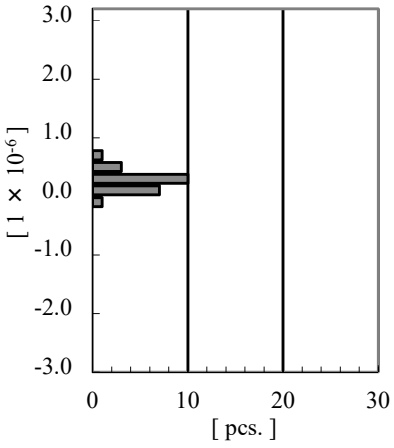

5.Resistance to soldering heat
For convention reflow
soldering furnace (3 times)

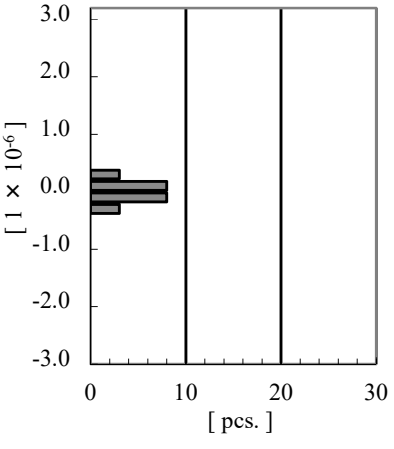

6. Shock
1500 mm x 150 g 6 directions

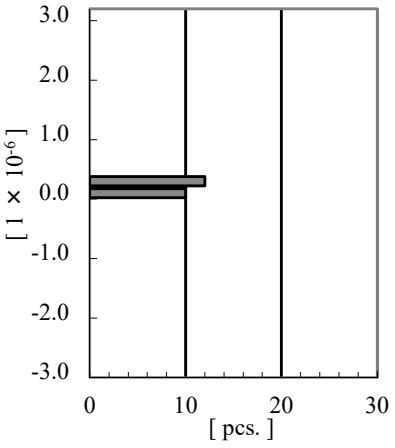

7. Vibration
10 Hz to 55 Hz amplitude 0.75 mm
55 Hz to 500 Hz 98 m/s^2
15 min / cycle 12 cycle × 3 directions)

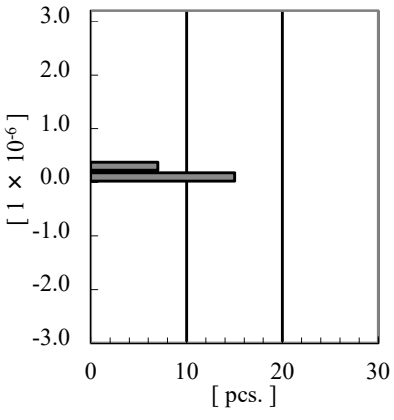

Qualification Data