EASCERA

EAS CORPORATIO

SPECIFICATION FOR APPROVAL

CUSTOMER	:	
PRODUCT TYPE	:	HC-49/S SMD
NOMINAL FREQ.	:	16.000000MHz
EAS P/N	:	EAS49SMD16.000K0DJR1
REVISION	:	A3
CUSTOMER P/N	:	
PM / SALES	:	
DATE	:	

CUSTOMER SIGNATURE & Date

(1) EAS requires one copy returned with signature and title of authorized individual that signifies acceptance of the attached specifications.

(2) Orders received and accepted by EAS after return of signed copy of specification will be produced per these specifications.

(3) Any changes to these specifications must be agreed upon by both parties and new revision of the Product Specification Sheet will be issued.

(4) Any issuance of purchase order prior to consigning back the Approval page of "Specification Sheets" from customers will be regarded as the agreement on the contents of these specifications.

Attachment: Product Specification Sheet

1
2
3
4
5

RoHS Compliant

EASCERA

EAS CORPORATION

PRODUCT SPECIFICATION SHEET

PRODUCT TYPE	:	HC-49/S SMD
NOMINAL FREQ.	:	16.000000MHz
EAS P/N	:	EAS49SMD16.000K0DJR1
REVISION	:	A3

PE/RD	QA	MFG

NOTE:

(1) The green product standard set by EAS is based upon the international standards. Related information is publicly described on the EAS's Website, and updated regularly. The document is compliant with the latest green product quality system directives at the time.

(2) Revision "Sx" is for engineering samples only. PE/RD's approval required.

(3) Revision "Ax" is production ready. PE, QA and MFG's approval required.

RoHS Compliant

Rev	Revise page	Revise contents	Date	Ref.No.	Reviser
A1	N/A	Initial Released	2018/10/7	N/A	Allen SU

CONTENT

SPECIFICATIONS PAGE

- ELECTRICAL SPECIFICATIONS 4
- DIMENSIONS 5
- SUGGESTED REFLOW PROFILE 5
- SUGGESTED MANUAL SOLDER CONDITION 5
- MARKING 6
- STRUCTURE ILLUSTRATION : 7
- EMBOSS CARRIER TAPE & REEL 8
- PACKING 8
- RELIABILITY SPECIFICATIONS 9 , 10

ATTACHMENT(S) (optional)

TESTING DATA

- ELECTRICAL CHARACTERISTICS TEST A ☐ YES ☑ NO
- TEMPERATURE CHARACTERISTICS TEST B ☐ YES ☑ NO

ELECTRICAL SPECIFICATIONS

Standard atmospheric conditions

Unless otherwise specified, the standard range of atmospheric conditions for making measurement and tests are as follow:

Ambient temperature : 25+/-5°C

Relative humidity : 40%~70%

If there is any doubt about the results, measurement shall be made within the following limits:

Ambient temperature : 25+/-1°C

Relative humidity : 40%~70%

Measure equipment

SAUNDERS 250A/250B CRYSTAL IMPEDANCE METER.

Crystal cutting type

The crystal is using AT CUT (thickness shear mode).

	Parameters	SYM	Electrical				Notes
			MIN.	TYP.	MAX.	UNITS	
1	Nominal Frequency	FL	16.000000 MHz			MHz	
2	Oscillation Mode		Fundamental				
3	Load Capacitance	CL		20.0		pF	
4	Frequency Tolerance	FT	-20		+20	ppm	at 25 °C +/- 3 °C
5	Frequency Tolerance	ST	-30		+30	ppm	Over Operating Temp.Range
6	Operating Temperature	OT	-20		+70	°C	
7	Aging		-5		+5	ppm	1st year
8	Drive level	DL		100	500	uW	
9	Effective Resistance Rr	Rr			100	ohm	
10	Shunt Capacitance	C0			7	pF	
11	Motional Capactiance	C1				fF	
12	Insulation Resisstance		500			Mohm	at DC 100V
13	Storage Tempeature Range		-40		+85	°C	
14	SPDB(+/-5000ppm)				-3.0	dB	

■ FACTORY LOCATION : CHINA

DIMENSIONS

UNIT:mm

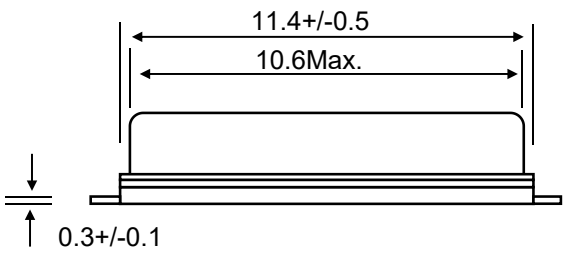

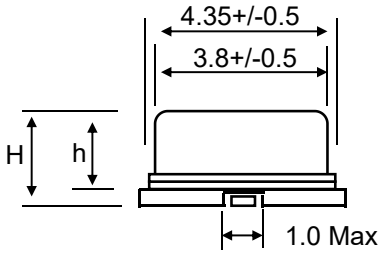

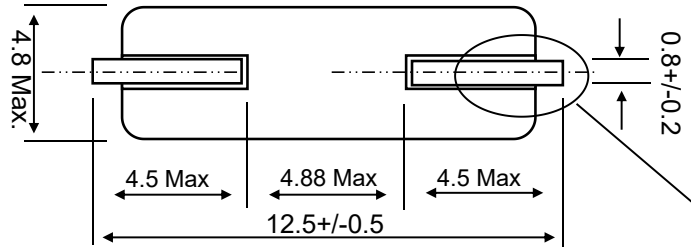

CHOOSE	TYPE	H(SMDHIGH)	h(BODY HIGH)
■	S3	3.8+/-0.3	3.3+/-0.3
□	S2	3.0+/-0.3	2.3+/-0.3

Solder Coating
(Sn-Ag-Cu Pb Free Coating)

Suggested Layout

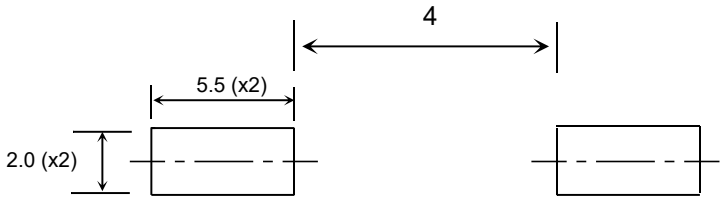

■ **SUGGESTED REFLOW PROFILE**

Solder melting point :220+/-10 °C, 60 sec. Min.
Peak Temperature: 260 +/- 5 °C, 10 sec. Max.

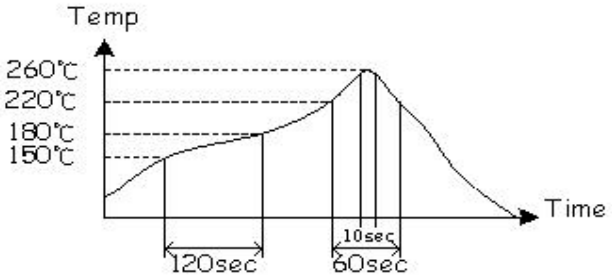

■ **SUGGESTED MANUAL SOLDER CONDITION**

Temperature: 350 +/- 10 °C
Time: 3 sec.
Re-solder times: twice

Marking

Unit Weight : 0.58 g +/- 0.05g



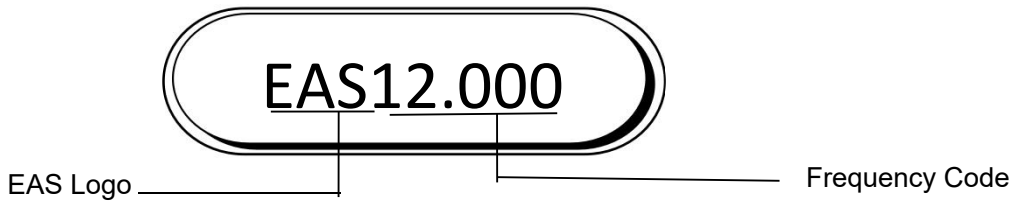

STRUCTURE ILLUSTRATION :

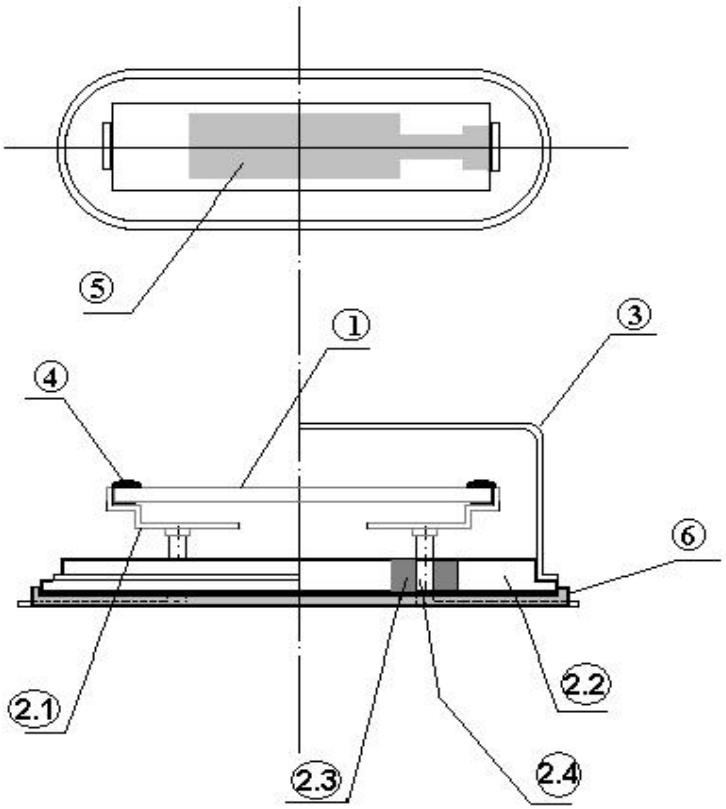

NO		COMPONENTS		MATERIALS	FINISH/SPECIFICATIONS
1		CRYSTAL BLANK		QUARTZ (SiO_2)	/
2	2.1	CRYSTAL BASE	SUPPORTER	NICKEL SILVER	/
	2.2		HOLDER	SPCC	Ni PLATED
	2.3		GLASS	GLASS	/
	2.4		LEAD	KOVAR	Ni PLATED+SOLDER DIPPED
					(Coating : Sn/Ag/Cu)
3		CRYSTAL COVER		NICKEL SILVER	Ni PLATED
4		CONDUCTIVE ADHESIVE		Ag + RESIN	/
5		ELECTRODE		Noble Metal	/
6		INSULATION PAD		PPS	/

(A) Tape and reel configuration:(Unit：mm)

（a）Emboss taping configuration. (per EIA-481-2)

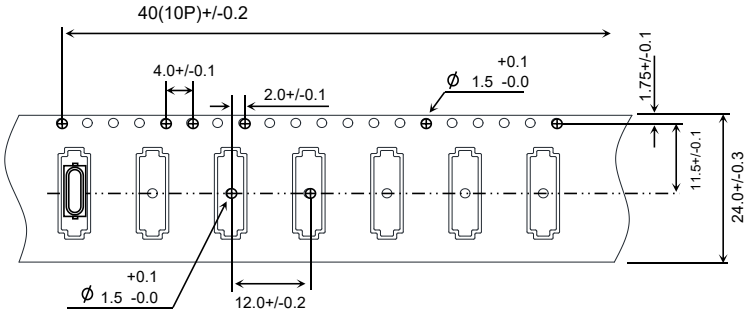

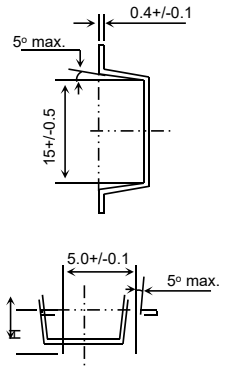

TYP.	H (+/-0.2)
S3	4.35
S2	3.5

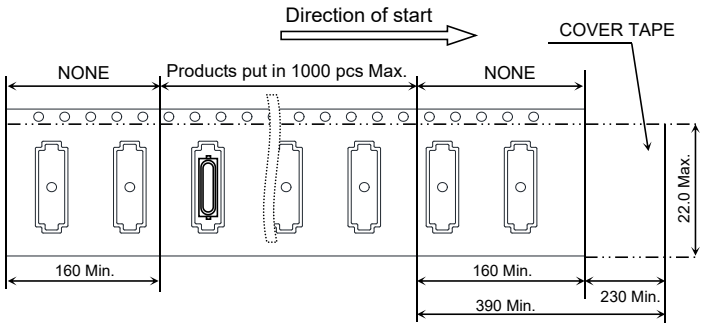

（b）Reel configuration.

(B) Packing & Label :(Unit：mm)

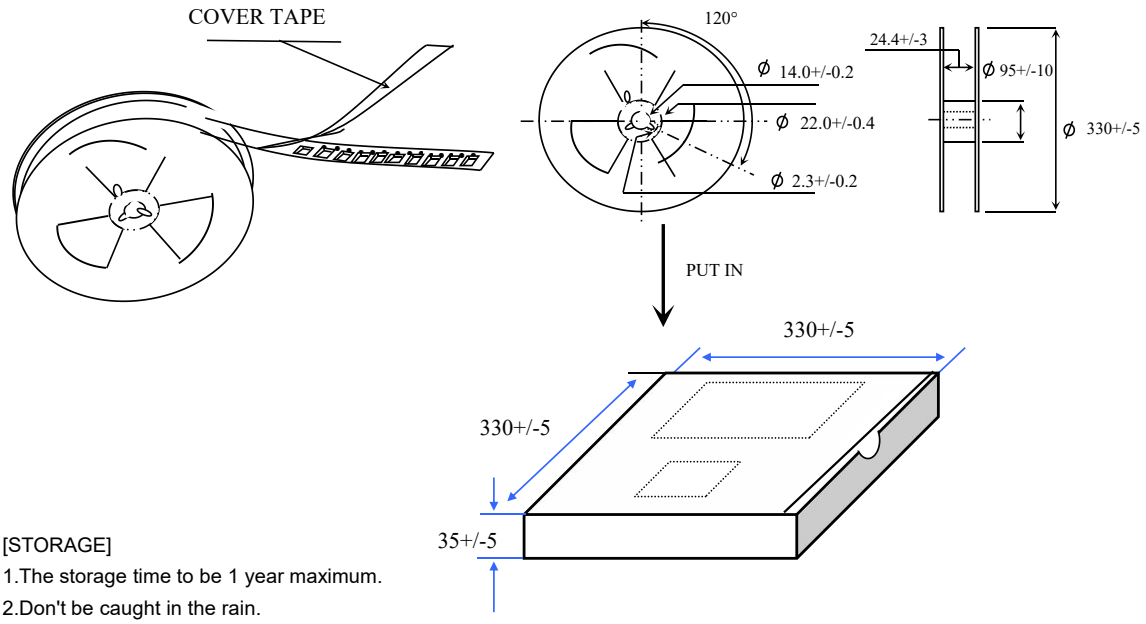

[STORAGE]

1.The storage time to be 1 year maximum.

2.Don't be caught in the rain.

3.The storage environment shall be 5°C ~40°C temperature and 30% ~ 75%RH humidity and free from the sun shine.

4.If customers have special requirements, we can paste labels according to it.

■ RELIABILITY SPECIFICATIONS

1.Mechanical Endurance

No.	Test Item	Test Methods	Test Criteria
1.1	Drop test	50 cm Height, Fall freely onto firm wood for 3 times.	B C
1.2	Mechanical Shock	1000 G , 0.5 m Sec. , 3 times for all 3 directions.	B C
1.3	Vibration	Frequency range 10 ~ 2000 Hz Acceleration 5G Sweep time 20 minute Pendicular axes each test time 4 hours (Total test time 12 hours)	B C
1.4	Terminal Strength	17.7N force for 60sec +/-1sec.	F
1.5	Solderability	Pb free :Temperature 235+/-5°C,Immersion time:5+/-1sec Pb :Temperature 215+/-5°C,Immersion time:5+/-1sec	E

2.Environmental Endurance

No.	Test Item	Test Methods	SPEC
2.1	Resistance To Soldering Heat	Test temperature 260 +/- 5 °C Test time 10 +/- 1 sec. Emersion Rate 25 +/- 6 mm/s Immersed of specimen 1.5mm	ACD
2.2	High Temp. Storage	+ 85°C +/- 3 °C for 500 +/- 12 Hrs	ACD
2.3	Low Temp. Storage	- 40 °C +/- 3 °C for 500 +/-12 Hrs	ACD
2.4	Temperature cycle	-40°C~85°C,for 300 cycles. 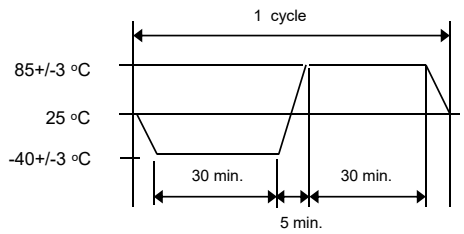	ACD
2.5	High Temp＆Humidity	85°C +/- 3°C , RH 85% , 500 Hrs	ACD

■HANDING CAUTIONS

Prohibit the use of ultrasonic welding in Assemblying

RELIABILITY SPECIFICATIONS

Specifications	
A	Frequency change: Within +/-20ppm or in customer's specification.
B	Frequency change: Within +/-10ppm or in customer's specification.
C	Equivalent series resistance(E.S.R) change: Within +/-15% or 10Ω(larger value).
D	After conditioning , quartz crystal units shall be subjected to standard atmospheric conditions for 24 hour, and measured.
E	Minimum 95% of immersed terminal shall be covered with new uniform solder.
F	No damage on specimen

Measurement condition

Measurements are carried out with Network-analyzer(S&A 250B or equivalent).