广东惠伦晶体科技股份有限公司
GUANGDONG FAITH LONG CRYSTAL TECHNOLOGY Co.,Ltd.
68 Donghuan Road,Jitigang Village,Huangjiang,Dongguan,Guangdong Province,P.R.China
TEL :+86(0)769-38879888 Fax :+86(0)769-38879889 E-mail : yl@dgylec.com

# PRODUCT SPECIFICATION SHEET

| | | |
|---|---|---|
| CUSTOMER | : | |
| PRODUCT TYPE | : | SMD X'TAL 2.0*1.6(4PAD) |
| NOMINAL FREQ. | : | 32.000000 MHz |
| FL P/N | : | 9S32000013 |
| REVISION | : | A2 |
| CUSTOMER P/N | : | |

CUSTOMER'S APPROVAL&DATE

FL CORPORATION

| APPROVED | CHECKED | DESIGNED |
|---|---|---|
| Xing Yue | Jin Qi | Li Xiang |

MSL1

RoHS Compliant

**CONTENTS** **PAGE**


- SPECIFICATION REVISION RECORD SHEET 2
- ELECTRICAL SPECIFICATIONS 3
- DIMENSIONS & MARKING 4
- STRUCTURE ILLUSTRATION 5
- RELIABILITY TEST SPECIFICATIONS 6
- PACKAGING REQUIREMENT 7/8
- SPECIFICATION OF THE ENVIRONMENT-RELATED SUBSTANCES 9


**ATTACHMENT（optional）**

- ELECTRICAL CHARACTERISTICS TEST A ☐ YES ☑ NO
- TEMPERATURE CHARACTERISTICS TEST B ☐ YES ☑ NO

**SPECIFICATION REVISION RECORD SHEET**

| Rev. | Revise page | Revise Contents | Date | Ref. No. | Reviser |
|---|---|---|---|---|---|
| A0 | N/A | Initial released | 24-Dec-19 | N/A | Chen XuanRu |
| A1 | P.3、P.7、P.8 | P.3 change Storage Temperature；P.7&P.8 change packaging requirement | 9-Nov-20 | N/A | Chen XuanRu |
| A2 | P.3 | Add ESD&MSL | 13-Sep-22 | N/A | Li Xiang |
| | | | | | |
| | | | | | |
| | | | | | |
| | | | | | |
| | | | | | |
| | | | | | |
| | | | | | |
| | | | | | |
| | | | | | |
| | | | | | |
| | | | | | |
| | | | | | |
| | | | | | |
| | | | | | |
| | | | | | |
| | | | | | |
| | | | | | |
| | | | | | |
| | | | | | |
| | | | | | |

## PRODUCT DESCRIPION

**Standard atmospheric conditions**

Unless otherwise specified. The standard range of atmospheric conditions for making measurement and tests are as follow:

Ambient temperature : 25±2℃
Relative humidity 40%~70%

If there is no doubt the results, measurement shall be made within the following limits:

Ambient temperature : 25±2℃
Relative humidity : 40%~70%

**Measure equipment**

Electrical characteristics measured by S&A250B or equivalent.

**Crystal cutting type**

The crystal is using AT CUT (thickness shear mode)

## ELECTRICAL SPECIFICATIONS

| No. | Items | Electrical Spec. | | | | | Remarks |
|---|---|---|---|---|---|---|---|
| | | Symbol | Min | Typ | Max | Units | |
| 1 | Nominal Frequency | FL | 32.000000 | | | MHz | |
| 2 | Oscillation Mode | - | Fundamental | | | - | |
| 3 | Load Capacitance | CL | 10.0 | | | pF | |
| 4 | Frequency Tolerance | - | ±10 | | | ppm | at 25±2℃ |
| 5 | Frequency Stability | - | ±30 | | | ppm | at -20～+70℃ (reference 25℃) |
| 6 | Shunt Capacitance | C0 | - | - | 5 | pF | |
| 7 | Aging (/1 year) | - | ±3 | | | ppm/year | at 25±2℃ |
| 8 | Operating Temperature | - | -20 | - | 70 | ℃ | |
| 9 | Storage Temperature | - | -40 | - | 105 | ℃ | |
| 10 | Equivalent series resistance | ESR | - | - | 40 | ohms | |
| 11 | Insulation Resistance | IR | 500 | - | - | M-ohms | at DC 100V |
| 12 | ESD | - | HBM＞4000V | | | - | JESD22-A114-B |
| 13 | MSL | - | Level 1 | | | - | IPC/JEDEC J-STD-033C |
| 14 | Drive Level | DL | - | - | 100 | uW | |

## DIMENSIONS unit:mm

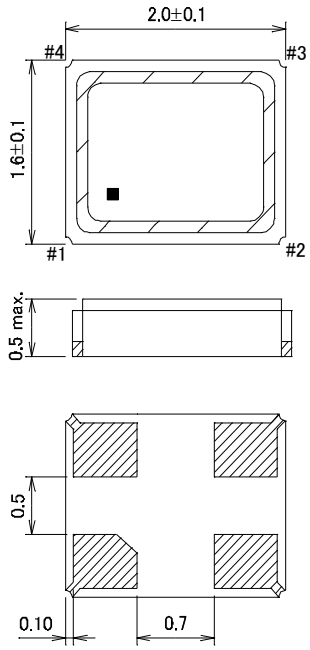


## CONNECTION DIAGRAM (TOP VIEW)

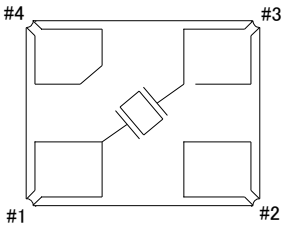


| Pin | Function |
|---|---|
| #1 | Xtal terminal (Input) |
| #2 | GND terminal |
| #3 | Xtal terminal (Output) |
| #4 | GND terminal |

## LAND PATTERN unit:mm

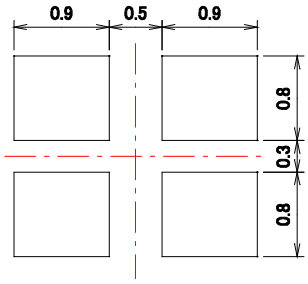


## MARKING

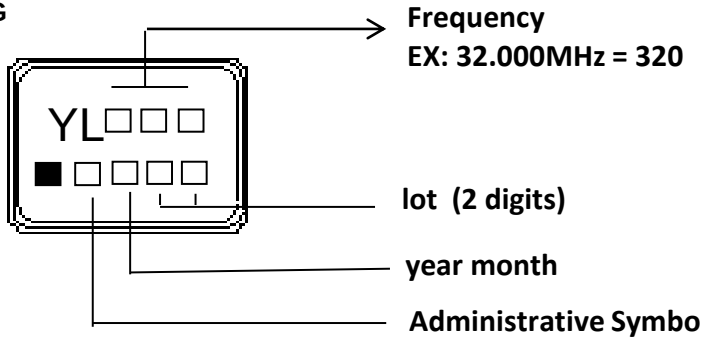


| month / year | | JAN | FEB | MAR | APR | MAY | JUN | JUL | AUG | SEP | OCT | NOV | DEC |
|---|---|---|---|---|---|---|---|---|---|---|---|---|---|
| 2021 | 2025 | A | B | C | D | E | F | G | H | J | K | L | M |
| 2022 | 2026 | N | P | Q | R | S | T | U | V | W | X | Y | Z |
| 2023 | 2027 | a | b | c | d | e | f | g | h | j | k | l | m |
| 2024 | 2028 | n | p | q | r | s | t | u | v | w | x | y | z |

## SUGGESTED REFLOW PROFILE

Total time : 360 sec. Max.

Solder melting point :225 °C

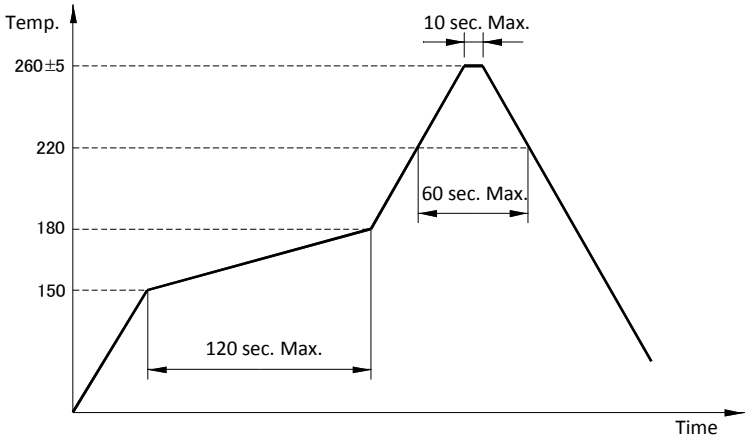

## STRUCTURE ILLUSTRATION

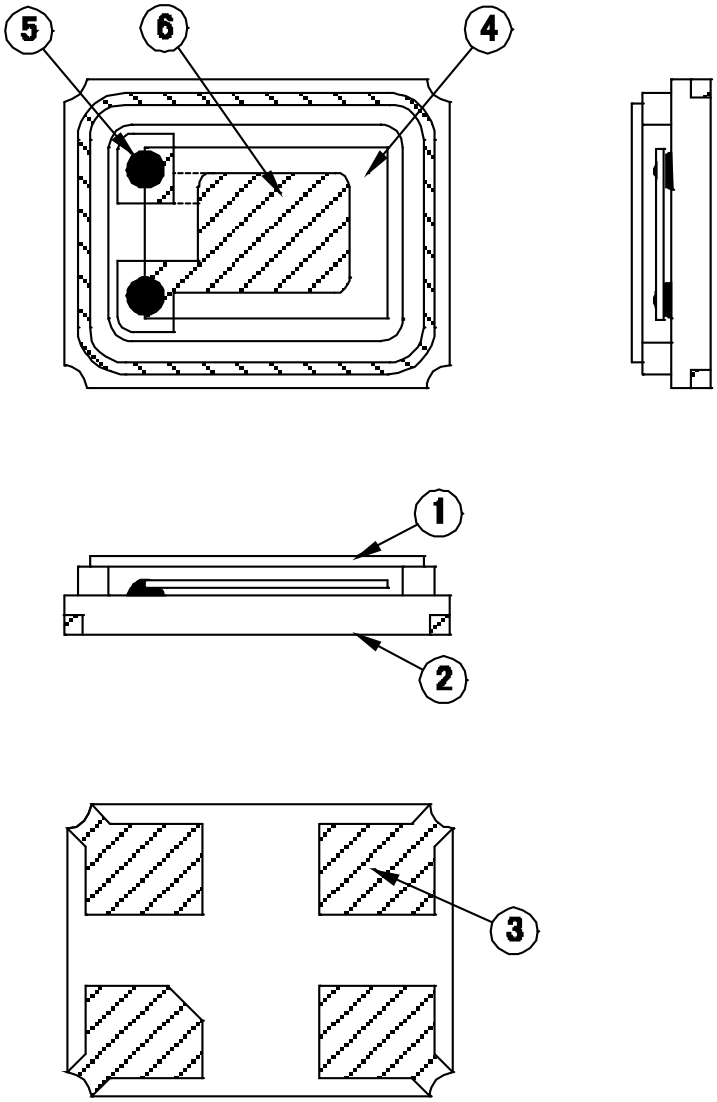


| NO | COMPONENTS | MATERIALS | QTY | FINISH/SPECIFICATIONS |
|---|---|---|---|---|
| 1 | Cap(Lid) | Kovar(Fe+Co+Ni) | 1 | Ni plating |
| 2 | Base(Package) | Almina Ceramics ($Al_2O_3$) | 1 | |
| 3 | Pad(Package) | Ni + Au | 4 | Ni+Au plating |
| 4 | Crystal blank | $SiO_2$ | 1 | - |
| 5 | Conductive adhesive | Ag | 2 | Silicone resin |
| 6 | Electrode | Noble metal | 2 | - |

## RELIABILITY SPECIFICATIONS

1.MECHANICAL ENDURANCE

| No. | Test Item | Test Methods | |
|---|---|---|---|
| 1 | Drop Test | 150 cm height, fall freely onto stainless plate 3 times. | JIS C6701 |
| 2 | Shock Test | 150g/150cm Height,3times in the direction of ±x, ±y, ±z on concrete floor | IEC-68-02-27 |
| 3 | Mechanical Shock | Device are shocked to half sine wave ( 1000 G ) three mutually pendicular axes each 3 times. 1.0m sec. duration time | MIL-STD-202F |
| 4 | Vibration | Frequency range 10 ~ 55 Hz<br>Amplitude 1.52 mm<br>Pendicular axes each test time 2 hours（x,y,z Axis）<br>Total test time 6 hours | MIL-STD-883E |
| 5 | Gross Leak | Standard Sample For Automatic Gross Leak Detector Test Pressure 2kg/cm2 | MIL-STD-883E |
| 6 | Fine Leak | Helium Bombing 4.5kgf/cm2 for 2 hr | MIL-STD-883E |
| 7 | Solderability | Temperature 260 °C ±5 °C<br>Immersing depth 0.5 mm minimum<br>Immersion time 5 ± 1 seconds<br>Flux Rosin resin methyl alcohol solvent ( 1 : 4 ) | GB/T 2424.17-2008 / IEC 60068-2-44:1995; GB/T 2423.28-2005 / IEC 60068-2-20:1979 |
| 8 | Resistance To Soldering Heat | Pre-heat temperature 125 °C<br>Pre-heat time 60 ~ 120 sec.<br>Test temperature 260 +/- 5 °C<br>Test time 5 +/- 1 sec. | MIL-STD-202F |

*Storage conditions： 18 months

*Constant humidity： 40~70%

2.ENVIRONMENTAL ENDURANCE

| No. | Test Item | Test Methods | |
|---|---|---|---|
| 9 | High Temp. Storage | + 125 °C +/- 3 °C for 500 +/- 12 hours | MIL-STD-883E |
| 10 | Low Temp. Storage | - 40 °C +/- 3 °C for 500 +/- 12 hours | |
| 11 | Thermal Shock | Total 100 cycles of the following temperature cycle<br>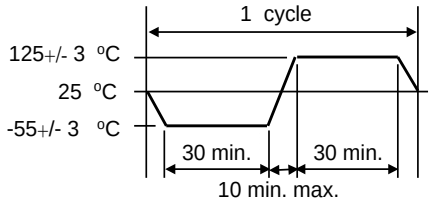 | MIL-STD-883E |
| 12 | High Temp&Homidity | 85℃±3℃, RH 85%,500Hrs | JIS C5023 |

**PACKING :**

8mm-4mm，3000pcs / reel，ϕ 178；

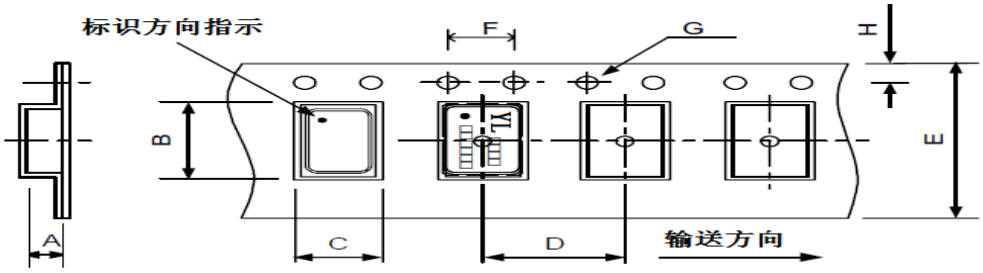


| | A | B | C | D | E | F | G | H | |
|---|---|---|---|---|---|---|---|---|---|
| Dimension | 0.65 ±0.1 | 2.20 ±0.1 | 1.90 ±0.1 | 4.00 | 8.00 | 4.00 | 1.50 | 1.75 | Unit：mm |

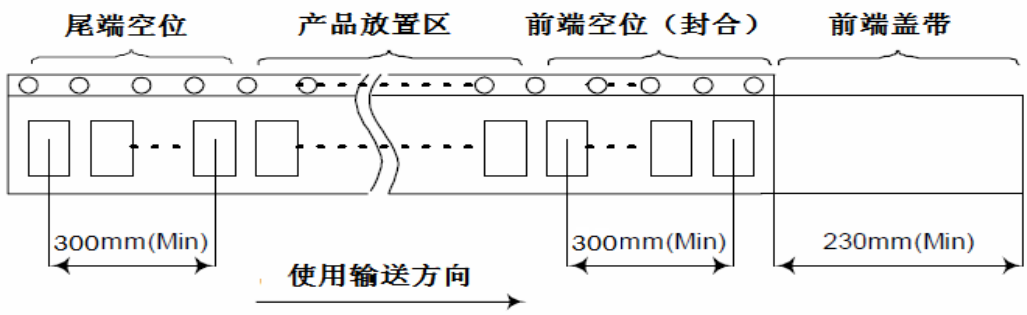


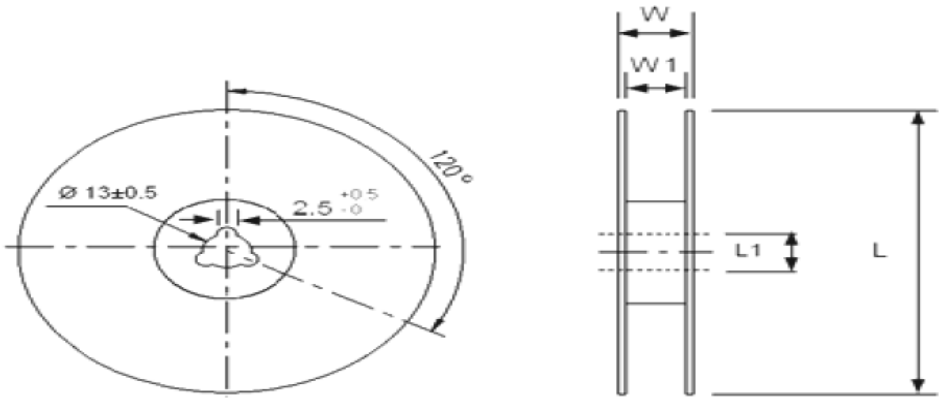


| Dimension | L | L1 | W | W1 | Unit：mm |
|---|---|---|---|---|---|
| | 178 | 13 | 11.5 | 8 | 3000pcs / reel |

## SMD PRODUCT PACKING STANDARD

### Out-going packing instruction

| Reel Packing | Inner Packing | Carton |
|---|---|---|
| name：reel<br>standard：diameter 18cm<br>material：plastics | name：Bubble Wrap<br>standard：430×330+20mm<br>material：HDPE(15 reels enter) | name：carton<br>standard：400×400×280mm<br>material：AB corrugated paper(4 bags enter) |
|  |  | 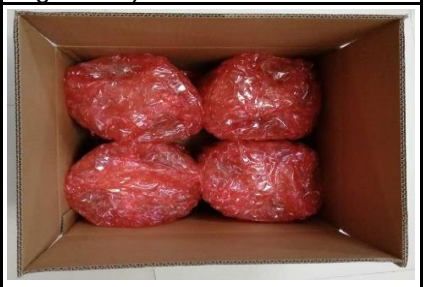 |
| | |  |

### The label instruction

| Label Drawing | Mark | Name of Article | Spec. | Size | Printing |
|---|---|---|---|---|---|
|  | L1 | 条码标签<br>Bar Code Label<br>(Chintz Paper) | 1.Part No.<br>2.Lot No.<br>3.Q'ty<br>4.Freq | 70x50mm | White |
|  | L2 | 条码标签<br>Bar Code Label<br>(Chintz Paper) | 1.Part No.<br>2.Date Code<br>3.Q'ty<br>4.Freq | 70x50mm | White |

**Remark**

Specifications on the label is for the use of templates with different product specifications may vary.
If customer specified requirements for labels packaging. please provide the operation procedure.

广东惠伦晶体科技股份有限公司
GUANGDONG FAITH LONG CRYSTAL TECHNOLOGY Co.,Ltd.
TEL : +86(0)769-38879888
FAX : 86(0)769-38879889



| Range | Products | Packing Material |
|---|---|---|
| **Banned Substances** | **Maximum concentration ppm(mg/kg)** | **Maximum concentration ppm(mg/kg)** |
| 1.镉及镉化合物<br>Cadmium and cadmium compounds | 100 | 100 |
| 2.铅及铅化合物<br>Lead and lead compounds | 1000 | 100 |
| 3.汞及汞化合物<br>Mercury and mercury compounds | 1000 | 100 |
| 4.六价铬化合物<br>Hexavalent-Chromium VI (Cr+6) | 1000 | 100 |
| 5.聚溴联苯 PBB<br>Polybrominated biphenyls | 1000 | N/A |
| 6.聚溴二苯醚 PBDE<br>Polybrominated diphenyl ethers | 1000 | N/A |
| 7.邻苯二甲酸二(2-乙基己基)酯 DEHP<br>Di (2-ethylhexyl) phthalate | 1000 | N/A |
| 8.邻苯二甲酸丁苄酯 BBP<br>Butyl Benzyl Phthalate | 1000 | N/A |
| 9.邻苯二甲酸二丁酯 DBP<br>Dibutyl Phthalate | 1000 | N/A |
| 10 邻苯二甲酸二异丁酯 DIBP<br>Diisobutyl Phthalate | 1000 | N/A |
| 11. 氟（F）、氯（Cl）、溴（Br）、碘（I）<br>Fluorine、Chlorine、 Bromine、Iodine | 900、900、900、900<br>注：Br+Cl＜1000 | N/A |
| 12.包装材料中重金属(汞、镉、六价铬、铅、PBB、PBDE)之总量<br>Heavy metals (mercury, cadmium, lead, Cr+6,PBB and PBDE) in packing materials | N/A | 100<br>铅(Pb) + 镉(Cd) + 汞(Hg) + 六价铬(Cr+6) <100ppm |
| 13.高度关注物质<br>SVHC-Substances of Very High Concern | 1000 | N/A |


惠伦晶体
FAITH LONG CRYSTAL